City of Davenport 2016 Water System Plan

Prepared for:
City of Davenport
411 Morgan Street
P.O. Box 26
Davenport, Washington 99122

Prepared by:
Stantec Consulting Services Inc.
621 W. Mallon Avenue, Suite 309
Spokane, WA 99201-2181

May 11, 2016

Sign-off Sheet

This document entitled City of Davenport 2016 Water System Plan was prepared by Stantec Consulting Services Inc. ("Stantec") for the account of City of Davenport (the "Client"). Any reliance on this document by any third party is strictly prohibited. The material in it reflects Stantec's professional judgment in light of the scope, schedule and other limitations stated in the document and in the contract between Stantec and the Client. The opinions in the document are based on conditions and information existing at the time the document was published and do not take into account any subsequent changes. In preparing the document, Stantec did not verify information supplied to it by others. Any use which a third party makes of this document is the responsibility of such third party. Such third party agrees that Stantec shall not be responsible for costs or damages of any kind, if any, suffered by it or any other third party as a result of decisions made or actions taken based on this document.

Prepared by _____

(signature)

Don Pawluk, PE

Reviewed by _____

(signature)

Alan Gay, PE

Stantec

Table of Contents

EXECUTIVE SUMMARY ..... **I**

ACRONYMS AND ABBREVIATIONS ..... **III**

1.0 INTRODUCTION **1.1**
1.1 GEOGRAPHIC DESCRIPTION 1.1

2.0 DESCRIPTION OF WATER SYSTEM **2.1**
2.1 SYSTEM OWNERSHIP AND MANAGEMENT 2.1
2.2 SYSTEM BACKGROUND 2.2
2.3 INVENTORY OF EXISTING FACILITIES 2.3
2.4 RELATED PLANS AND REFERENCES 2.5
2.5 EXISTING SERVICE AREA CHARACTERISTICS 2.5
2.6 WATER SERVICE REQUESTS 2.6

3.0 BASIC PLANNING DATA **3.1**
3.1 DEFINITION OF TERMS 3.1
3.2 CURRENT LAND USE AND ZONING 3.2
3.3 CURRENT DEMAND AND WATER USAGE ESTIMATIONS 3.2
3.3.1 Equivalent Residential Units (ERUs) 3.4
3.3.2 Average Daily Demand (ADD) 3.6
3.3.3 Maximum Daily Demand (MDD) 3.6
3.3.4 Peak Hourly Demand (PHD) 3.6

4.0 DEMAND FORECASTS **4.1**
4.1 PROJECTED LAND USE AND ZONING 4.1
4.1.1 Residential Land Use 4.1
4.1.2 Commercial and Industrial Land Use 4.1
4.1.3 Public Land Use 4.2
4.2 PROJECTED DEMAND AND WATER USAGE ESTIMATIONS 4.2
4.2.1 Projected ADD 4.3
4.2.2 Projected MDD 4.4
4.2.3 Projected PHD 4.4
4.2.4 Projected Water Demand Summary 4.5

5.0 SYSTEM ANALYSIS **5.1**
5.1 WATER QUALITY ANALYSIS 5.1
5.2 HYDRAULIC ANALYSIS 5.3
5.3 LEAK DETECTION ANALYSIS 5.6
5.4 EVALUATION OF EXISTING FACILITIES 5.6
5.4.1 Wells/Pumping Stations 5.6
5.4.2 Storage Tanks 5.7
5.4.3 Distribution System, Hydrants, and Services 5.10

5.5 SUMMARY OF SYSTEM DEFICIENCIES 5.11
5.5.1 Wells/Pumping Stations 5.11
5.5.2 Storage Tanks 5.11
5.5.3 Distribution System, Hydrants, and Services 5.11
5.6 RECOMMENDED SYSTEM IMPROVEMENTS 5.12
5.6.1 Wells/Pumping Stations ..... **Error! Bookmark not defined.**
5.6.2 Storage Tanks ..... **Error! Bookmark not defined.**
5.6.3 Distribution System, Hydrants, and Services 5.12

6.0 WATER RESOURCE ANALYSIS 6.1
6.1 SOURCE ANALYSIS 6.1
6.1.1 Columbia Basin GWMA Efforts 6.3
6.2 CONSERVATION PROGRAM 6.5
6.2.1 Service Meter Program 6.6
6.3 WATER LOSS CONTROL ACTION PLAN 6.7

7.0 SOURCE WATER PROTECTION 7.1

8.0 OPERATION AND MAINTENANCE 8.1
8.1 SYSTEM PERSONNEL 8.1
8.2 RECOMMENDED MAINTENANCE SCHEDULE 8.1
8.3 CITY MANAGEMENT AND PERSONNEL 8.2
8.4 OPERATOR CERTIFICATION 8.3
8.5 OPERATION AND MAINTENANCE PROCEDURES 8.3
8.5.1 Wells No. 6 and 7 ..... 8.3
8.5.2 Distribution System 8.5
8.5.3 Disinfection Procedures 8.6
8.6 SAFETY PROCEDURES 8.6
8.7 CUSTOMER COMPLAINT RESPONSE PROGRAM 8.8
8.8 RECORD KEEPING AND REPORTING 8.8
8.9 EMERGENCY RESPONSE PLAN 8.9
8.9.1 Response for Power Failure 8.10
8.9.2 Response for Water Transmission Line Failure 8.11
8.9.3 Response for Well Pump Failure 8.12
8.9.4 Response for Electrical Failure 8.12
8.9.5 Response to Contamination of Water Supply 8.13
8.9.6 Response to Contamination of Water Source (and Supply) 8.15
8.10 CROSS CONNECTION CONTROL 8.15
8.10.1 Cross Connection Control Program Elements 8.16

9.0 CAPITAL IMPROVEMENT PROGRAM 9.1

10.0 FINANCIAL ASSESSMENT 10.1
10.1 CURRENT WATER SYSTEM RATES 10.1
10.1.1 Water Use Rates – Monthly 10.1

10.1.2 Cross Connection 10.1
10.1.3 Service Charges 10.1
10.2 SUMMARY OF PAST INCOME AND EXPENSES 10.2
10.3 PROPOSED 6-YEAR OPERATING BUDGET 10.6

LIST OF TABLES

Table 1: Distribution Network Sizing 2.4
Table 2: Distribution Piping Material 2.4
Table 3: Population Estimates from U.S. Census Bureau 3.2
Table 4: Existing Service Connections 3.3
Table 5: Well Production Rates for 2011 ..... 3.3
Table 6: Projected Population Growth 4.2
Table 7: Average Daily Demand 4.3
Table 8: Average Daily Demand with Conservation 4.3
Table 9: Maximum Daily Demand 4.4
Table 10: Maximum Daily Demand with Conservation 4.4
Table 11: Peak Hour Demand 4.5
Table 12: Peak Hour Demand with Conservation 4.5
Table 13: Projected Water Demand Summary 4.5
Table 14: Minimum Monitoring Requirements 5.2
Table 15: Hydrant Flow Comparison: Actual vs. Modeled 5.3
Table 16: Existing System Fire Flow Analysis with Current MDD Demand 5.5
Table 17: Summary of Water Rights 6.1
Table 18: Summary of Municipal Well Log Information 6.2
Table 19: Water Rights Self-Assessment 6.3
Table 20: Priority Levels for Customer Complaints 8.8
Table 21: Capital Improvement Program- Distribution Upgrades and Improvements 9.1
Table 22: Water System Revenues 10.2
Table 23: Water System Expenditures 10.3
Table 24: Water Capital Improvement Fund 10.4
Table 25: Summary of Past Income and Expenses 10.5
Table 26: Proposed Water System Revenues 10.6
Table 27: Proposed Water System Expenditures 10.6
Table 28: Proposed 6-Year Operating Budget 10.7

LIST OF APPENDICES

APPENDIX A EXHIBITS A.1

APPENDIX B WELL LOGS B.1

APPENDIX C DOH SYSTEM INFORMATION C.1

APPENDIX D CITY PROVIDED INFORMATION D.1

APPENDIX E LINCOLN COUNTY ZONING AND PLANNING INFORMATION E.1

APPENDIX F CITY OF DAVENPORT STANDARD PLANS F.1

APPENDIX G WATERCAD MODELS G.1

APPENDIX H 2011 LEAK DETECTION REPORT FROM UTILITY SERVICES ASSOCIATES H.1

APPENDIX I WATER RIGHTS DOCUMENTATION I.1

APPENDIX J COLUMBIA BASIN GWMA REPORT J.1

APPENDIX K CROSS-CONNECTION CONTROL PROGRAM K.1

Executive Summary

This Water System Plan was prepared for the City of Davenport by Stantec. The purpose of this Water System Plan is to evaluate the drinking water system capacity and distribution needs of the City of Davenport to meet current and future demands. This is the first Water System Plan created for the City of Davenport's water system and is replacing the previous Small Water System Management Program.

The City of Davenport owns and operates a Group A community public water system, System Identification Number 18100 N. The system is comprised of 2 source wells and pumping stations, 3 storage tanks, approximately 16.5 miles of distribution piping, and 116 hydrants. The Water System Plan was prepared in accordance with Chapter 290 – Group A Public Water Supplies, Title 246 – Department of Health, within the Washington Administrative Code. The existing service area for the City of Davenport's water system consists of the incorporated City limits, a total of approximately 1,049 acres.

The water system is approved by the Washington Department of Health for a maximum of 932 service connections. According to the 2010 Census, Davenport's population was 1,734. The majority of the service connections are residential while the largest consumers within the system include the schools, hospital, sports complex, fairgrounds, stockyard (auction), parks, and fertilizer providers.

Current demand and water usage estimations were prepared using well production logs and billing records data made available from the City of Davenport. The population within the City of Davenport has had steady growth over the past 30 years. The 20 year population projection (2033) is 2,070. Future demand and water usage estimations were calculated based on the projected population growth rate of 0.8%, with and without conservation efforts.

The City of Davenport follows all standards and requirements of the Federal Safe Drinking Water Act as mandated by the State of Washington for all Group A public water systems. The City works with the Washington State Department of Health to ensure that the appropriate water quality analyses are performed and records are kept in accordance with the Washington Administrative Code and the Revised Code of Washington.

Hydraulic analysis of the water system was completed utilizing a specialized computer hydraulic modeling program. Static pressures from field hydrant testing were used to calibrate the hydraulic model. Results from the hydraulic modeling showed three current areas within the system that have pressures less than the recommended 40 pounds per square inch. The model also showed that just over 50 percent of the fire hydrants can provide at least 1,500 gallons per minute with minimum system pressures of 20 pounds per square inch, while only two hydrants are not able to provide at least 500 gallons per minute at the minimum 20 pounds per square inch of pressure.

The City of Davenport has five municipal water rights associated with two source wells that utilize groundwater to supply the water system with a combined flow not to exceed 3,130 gallons per minute and 2,503 acre-feet per year, continuously, each year. Declining well yields have been observed by the City over the past several decades. This potentially critical situation was confirmed in a report prepared by the Columbia Basin Ground Water Management Area for the City in November 2012 and is a trend for the community's reliance on Wanapum basalt and Grande Ronde Basalt aquifers in central Washington. This report also identified that there is little to no groundwater recharge and that the water being utilized by many municipalities in the region, including the City of Davenport, is ancient.

Acronyms and Abbreviations

AC	Asbestos Cement
ACS	(U.S. Census Bureau) American Community Survey
ADD	Average Daily Demand
ags	above ground surface
ANSI	American National Standards Institute
APWA	American Public Works Association
AWWA	American Water Works Association
bgs	below ground surface
CCC	Cross Connection Control
CCR	Consumer Confidence Report
CEUs	continuing education units
cf	cubic feet
CFR	Code of Federal Regulations
CIP	Capital Improvement Program
DOE	(Washington State) Department of Ecology
DOH	(Washington State) Department of Health
EPA	(United States) Environmental Protection Agency
ERU	Equivalent Residential Unit
ES	Equalizing Storage
EX	exhibit
ft	feet
FSS	Fire Suppression Storage
GPD	gallons per day
gpm	gallons per minute
GWMA	(Columbia Basin) Ground Water Management Area
hp	horsepower
Hwy	Highway
lf	linear feet
MCL	Maximum Contaminant Level
MDD	Maximum Daily Demand
MSL	Mean Sea Level
NRCS	National Resource Conservation Service
OSHA	Occupational Safety and Health Administration
OS	Operational Storage

O&M	Operation and Maintenance
PHD	Peak Hourly Demand
PNWS	Pacific Northwest Section (AWWA)
ppm	parts per million
psi	pounds per square inch
PVC	Polyvinyl Chloride
RCW	Revised Code of Washington
RPM	revolutions per minute
SB	Standby Storage
SOC	Synthetic Organic Chemicals
SDWA	Safe Drinking Water Act
Stantec	Stantec Consulting Serv ices Inc.
SWSMP	Small Water System Management Program
TDS	total dissolved solids
TTHM	Total Trihalomethanes
VFD	variable frequency drive
VOC	Volatile Organic Compound
WAC	Washington Administrative Code
WFI	Water Facilities Inventory
WISHA	Washington Industrial Safety and Health Act
WLCAP	Water Loss Control Action Plan
WRIA	Water Resource Inventory Area
WSDOT	Washington State Department of Transportation
WSP	Water System Plan
WUE	Water Use Efficiency
WWTP	Wastewater Treatment Plant

1.0 INTRODUCTION

This Water System Plan (WSP) documents the Community Group A public water system owned and operated by the City of Davenport (City). The purpose of this WSP is to evaluate the existing drinking water system capacity and infrastructure conditions compared to both the current and future needs and demands on the system. This WSP also reviews the regulatory requirements per both the Washington Administrative Code (WAC) and the Federal Safe Drinking Water Act (SDWA). Finally, recommended system improvements and Capital Improvement Programs are provided based on the evaluation and analysis of the existing system and future system needs.

The following list provides topics considered within this WSP as outlined in WAC 246-290-100, including references to the requirements set forth in the WAC:

- Section 2 - Description of Water System [WAC 246-290-100(4)(a)]
- Section 3 - Basic Planning Data [WAC 246-290-100(4)(b)]
- Section 4 - Demand Forecasts [WAC 246-290-100(4)(c)]
- Section 5 - System Analysis [WAC 246-290-100(4)(e)]
- Section 6 - Water Resource Analysis [WAC 246-290-100(4)(f)]
- Section 7 - Source Water Protection {WAC 246-290-100(4)(g)]
- Section 8 - Operation and Maintenance [WAC 246-290-100(4)(h)]
- Section 9 - Capital Improvement Program [WAC 246-290-100(4)(i)]
- Section 10 - Financial Viability Program [WAC 246-290-100(4)(j)]

1.1 GEOGRAPHIC DESCRIPTION

The City of Davenport is located in Lincoln County and serves as the county seat. It is part of a region referred to as the Big Bend Plateau, which consists of a system of channels and coulees eroded into bedrock by glacial rivers and streams of the recent ice age. Many of the areas between the channels are gently rolling with wind-deposited soils well suited for grain farming. Lincoln County is the second largest wheat producing county in the world.

There are three major state highways that run through the City including Highway (Hwy) 2 (east-west), Hwy 25 (north-south) and Hwy 28 (north-south). The City streets are laid out in a north-south, east-west grid with these three highways. The City is mostly residential, with the majority of the commercial zoning being along the highways. Cottonwood Creek, a tributary to the Columbia River, flows from east to west through the City. The City is located within Township 25

North Range 37 East of the Willamette Meridian. A vicinity map is provided as Exhibit 1 (EX 1) in Appendix A.

The City owns, operates, and maintains a municipal wastewater treatment plant, including a facultative lagoon system located north of the City. Electricity is provided by Avista Utilities.

The climate is considered semi-arid continental, being hot and dry in the summer and moderately humid in the winter and fall. Precipitation is in the form of rain, as well as snow in the winter. Summers are generally drier and warm. Climatic data from the Western Regional Climate Center for the City of Davenport is listed below:

Average Yearly Precipitation:	14.87 inches		
Average Yearly Snowfall:	39.1 inches		
January Temperature	Average Low:	18.6°F	Average High: 30.9°F
August Temperature	Average Low:	49.5°F	Average High: 82.8°F

Soils within and near the City, according to the Natural Resource Conservation Service (NRCS) web soil survey program, are comprised of approximately two dozen different soil units, with two primary soil types and three secondary types. The primary soil types include Benge silt loam and Benco cobbly silt loam, which are both described as well-draining glacial outwash and loess materials. The three secondary soil units include Anders silt loam, Anders-Bakeoven-Rock outcrop complex, and Hanning silt loam, which are all also well-draining loess materials. Native vegetation in the area consists mainly of shrub-steppe, though most of the surrounding area has been converted to cropland.

The City is located within the Columbia River basalt aquifer system, an area also defined as the Columbia Basin Ground Water Management Area (GWMA). The Columbia Basin GWMA includes Adams, Franklin, Grant, and Lincoln counties. The City of Davenport falls in the northern basin subarea of the Columbia Basin GWMA. The Columbia River basalt aquifer system consists of the following hydrogeologic units (from shallowest to deepest): suprabasalt or alluvial sediments, the Saddle Mountain Basalt, the Priest Rapids and Roza Members of the Wanapum Basalt, the Frenchman Springs Member of the Wanapum Basalt, the Sentinel Bluffs Member of the Grande Ronde Basalt, and the deeper Grande Ronde Basalt members. The City is also considered part of the Lower Lake Roosevelt Water Resources Inventory Area (WRIA).

According to the 2010 census completed by the U.S. Census Bureau, the City of Davenport's population was 1,734 including 694 total households and 750 total housing units. The largest industries in which residents of the City of Davenport are employed according to the 2006-2010 American Community Survey (ACS) 5-Year Estimates produced by the U.S. Census Bureau include private industry (60%); government (35%); education, health care, and social services (31%); construction (16%); and retail (11%). The median household income for residents in the

City of Davenport is $44,784. Approximately 12.7 percent of families according to the 2006-2010 ACS survey had incomes below the national poverty level.

The nearest neighboring water purveyor is the City of Reardan, located approximately 12.5 miles east of Davenport. The City of Creston is located approximately 20 miles west of Davenport. The City of Davenport does not sell to or purchase water from any other purveyors.

2.0 DESCRIPTION OF WATER SYSTEM

2.1 SYSTEM OWNERSHIP AND MANAGEMENT

The water system is owned and operated by the City of Davenport. The City operates under the direction of the elected officials, including the Mayor and seven councilmembers. The Mayor and Council hire and oversee the staff, which includes the City Administrator, City Clerk/Treasurer, Deputy City Clerk/Treasurer, City Maintenance Supervisor, and City Crew members. The City Administrator provides daily management of City staff.

City of Davenport
411 Morgan Street
P.O. Box 26
Davenport, Washington 99122

Phone: (509) 725-4352
Fax: (509) 725-4300

The current Mayor and Council include:

Mayor:	Brad Sweet
Council Member:	Scott Liebing
Council Member:	Alan Coriell
Council Member:	Theresa Telford
Council Member:	Pete Schweiger
Council Member:	Pat Rosman
Council Member:	Patrick Katz
Council Member:	Nathan Hansen

The current City Staff include:

City Administrator:	Steve Goemmel
City Clerk/Treasurer:	Dave Leath
Deputy Clerk/Treasurer:	Sabrina Warwick
City Maintenance Superintendent:	Fred Bell

2.2 SYSTEM BACKGROUND

The following timeline describes the chronological history for the development of the City of Davenport's water system:

1909 First water tank (Tank No. 1) was constructed on the northwest corner of 11th Street and Washington Street.

1914 Well 2 was dug on Lot 10, Block 5 of Dillon's Addition (11th Street and Washington Street) to a depth of 503 feet (ft) with a diameter of 15 inches. Yield was 500 gallons per minute (gpm). A 75-horsepower (hp) Pomona pump was installed.

1948 Well 3 was dug to a depth of 722 ft below ground surface (bgs) within the NE ¼ of the NE ¼ of Section 21, Township 25 North, Range 37 East, Willamette Meridian (near Ross Street and Nichols Street).

1950s A 150,000-gallon elevated riveted steel tank (Tank No. 2) was constructed during the mid-1950s southwest of Ross Street and Nichols Street.

1960 Well 4 was dug within the SE ¼ of the SE ¼ of Section 16, Township 25 North, Range 37 East, Willamette Meridian. The well was dug to a depth of 302 ft bgs and had a static water level of 50 ft bgs.

1962 An irrigation well was drilled at the cemetery (owned by the City) to a depth of 360 ft. Diameter of the well was 10 inches with casing from 0 to 63 ft bgs. The static water level was 82 ft bgs. The pump was set at 342 ft bgs.

1962 Well 5 was constructed for irrigation use at 900 Jefferson Street. The well was drilled to a depth of 501 ft bgs. Diameter of the well was 12 inches with casing from 0 to 60 ft bgs. The static water level was 89 ft bgs.

1975 Well 6 was drilled on the northeast corner of the intersection between 11th Street and Jefferson Street to a depth of 975 ft. Static water level in the well was 220 ft bgs. Diameter of the well was 18 inches with casing extended to 445 ft bgs.

1975 A 500,000-gallon non-elevated welded steel tank (Tank No. 3) was constructed approximately 950 ft north of 7th Street and Lincoln Street.

1990 Wells 4 and 5 were decommissioned in June. Well No. 4 became an emergency backup source for the water system.

1993 Well 3 was decommissioned in March. (Well 3 was replaced by Well 7)

1995	Well 7 was developed near the corner of Ross Street and Nichols Street. The well was drilled to a depth of 959 ft, including 20-inch casing from 1 ft above ground surface (ags) to 37 bgs, and 16-inch casing from 2 ft ags to 447 ft bgs with bentonite surface seal. The static water level was 265 ft bgs.
1995	Well 2 was made inactive after the completion of Well No. 7. Well No. 2 became an emergency backup source for the water system.
1999	Well 5 located at 900 Jefferson Street was abandoned.
2007	Lincoln County was added to the Columbia Basin GWMA.
2012	GWMA published the City of Davenport Groundwater Supply Review report in November.

2.3 INVENTORY OF EXISTING FACILITIES

The City has a total of two active source wells and one inactive emergency backup well. Well 6 is located northeast of the intersection between 11th Street and Jefferson Street. The well is 975 ft deep with the pump set at around 400 ft bgs and estimated maximum capacity of 1,600 gpm. Well 7, located southeast of the intersection between Nichols Street and Ross Street, is 959 ft deep and estimated maximum capacity of 1,050 gpm. The Washington State Department of Health (DOH) records show that Well 2, though inactive, is still connected to the system as a backup source in emergency situations. Well 2 is located at the northwest corner of 11th Street and Washington Street. According to the City, there is not currently a pump connected to Well 2 and it is not physically connected to the water system. Wells 1, 3, 4, and 5 have all been decommissioned and are not connected to the water system. Current well locations (wells 2, 6, and 7) are shown on EX 2 in Appendix A. Well logs are provided in Appendix B. System information from DOH is included in Appendix C.

Disinfection treatment for the City's water system is attained through a liquid chlorination system. Chlorine dosing pumps drawing from liquid chlorine solution tanks are located inside the pump houses for wells 6 and 7.

There are three steel tank reservoirs that provide storage for the City's water system. Tank 1 is located northwest of the intersection of Washington Street and 11th Street on the same site as Well 2. The elevated riveted steel tank has a capacity of 50,000 gallons and operates on an altitude valve to provide water to the system. The inside of Tank 1 was recoated between 1999 and 2001 and is in good condition. Tank 2 is located just south of the pump house for Well 7. The elevated riveted steel tank has a capacity of 150,000 gallons and the interior was last recoated in 2009. Tank 3 is located north of the City, approximately 0.2 miles north of Lincoln Street and 7th Street, west of McGinnis Road. It has a capacity of 500,000 gallons and the interior was last recoated in 2010. All three tanks are shown on EX 2 in Appendix A.

The water system is comprised of approximately 16.5 miles of distribution piping, with some sections being more than 60 years old. The pipe sizes range from 1.5 inches to 12 inches, with the majority of the piping being 6 inches. The distribution piping network is shown according to pipe diameter size (in inches) on EX 3 in Appendix A. Table 1 highlights the breakdown of the distribution network by pipe size.

Table 1: Distribution Network Sizing

Pipe Size	Total Length (ft)	Percentage of System (%)
1.5-inch	211	0.2
2-inch	3,986	4.5
4-inch	7,752	8.8
6-inch	48,241	54.8
8-inch	15,050	17.1
10-inch	11,903	13.5
12-inch	936	1.1
TOTAL	**88,079**	

Various types of materials are used for distribution piping, including polyvinyl chloride (PVC), ductile iron, cast iron, galvanized iron, steel, and asbestos cement (AC). The distribution piping network is shown according to pipe material type on EX 4 in Appendix A. Table 2 highlights the breakdown of the distribution network by pipe size.

Table 2: Distribution Piping Material

Pipe Material Type	Total Length (ft)	Percentage of System (%)
PVC	41,530	47.2
Ductile Iron	24,689	28.0
Steel	10,716	12.2
AC	5,503	6.2
Cast Iron	3,842	4.4
Galvanized Iron	1,798	2.0
TOTAL	**88,079**	

2.4 RELATED PLANS AND REFERENCES

This WSP was prepared to update the previous Water System Plan (WSP) prepared by USKH (now Stantec) in January 2014. The 2014 WSP was prepared to replace the existing Small Water System Management Program (SWSMP) prepared by Century West Engineering in December 2006.

The following references were used in preparing this WSP:

- *Washington Administrative Code, Title 246 – Department of Health, Chapter 290 – Group A Public Water Supplies*
- *Water System Design Manual*, Washington State Department of Health, December 2009
- *Water System Planning Handbook*, Washington State Department of Health, April 1997
- *Recommended Standards for Waterworks*, Ten State Standards, current edition
- *Sizing Water Lines and Meters*, AWWA Manual M22, current edition
- *Cross Connection Control Manual, Accepted Procedure and Practices*, Pacific Northwest Section (PNWS)/AWWA CCC-Committee, 1996
- *City of Davenport, Washington Groundwater Supply Review*, Columbia Basin Ground Water Management Area, et al., November 2012
- *Columbia Basin Ground Water Management Area Municipal Groundwater Supply Review: Current Conditions and Predicted Future Conditions Summary Report*, Columbia Basin Ground Water Management Area, et al., October 2012
- *Test-Observation Well Near Davenport, Washington*: Description and Preliminary Results, D.A. Myers, 1972

2.5 SERVICE AREAS

2.5.1 Existing Service Area

The existing service area for the City's water system consists of most of the area within the incorporated boundaries as well as Northridge development off of Wheatland Road. The existing service area is shown on EX 3, EX 4, and EX 6 in Appendix A.

The City boundaries are generally the highest elevations within the water system, with the lowest elevations being along Hwy 2 through town. The highest elevation within the water system is approximately 2,476 ft above mean sea level (MSL) along McInnis Road near the entrance to the new sports complex. The largest water users in the system include the schools, hospital, sports complex, fairgrounds, stockyard (auction), parks, city pool facility, and fertilizer providers.

2.5.2 Retail Service Area

The retail service area for the City's water system slightly expands on the existing service area to include an area in the NE part of the City. This area is directly east of the Hospital, between the Hospital and State Route 25. The retail service area is shown on EX 3, EX 4, and EX 6 in Appendix A.

2.5.3 Future Service Area

The future service area for the City's water system also expands on the existing service area and the retail service area. On the east of the City, this adds an area between the alignment of State Route 25 and the railroad tracks; on the northwest of the city, this adds an area that is currently farmland along the west side of Gunning Road; and on the west of the City this adds a small area west of the Gunning Road alignment and north and south of Main Street. The future service area is shown on EX 3, EX 4, and EX 6 in Appendix A.

2.5.4 Water Rights Place of Use

The water rights place of use has identical boundaries to the future service area. The water rights place of use is shown on EX 3, EX 4, and EX 6 in Appendix A.

2.6 WATER SERVICE REQUESTS

As required by the Municipal Water Law, DOH 331-366 Revised November 2010, the City will provide water to anyone that asks and pays the associated fees within the "retail service area" as shown on the existing service area map (EX 2) in Appendix A. Within the established service area, the City fulfills its Duty to Provide Service to all new connections by maintaining sufficient capacity, providing consistent adopted local plans and development regulations, maintaining sufficient water rights, and providing service in a timely and reasonable manner. Chapter 13.04, Water Supply System, of the Davenport Municipal Code sets forth the rules and regulations governing the use of water from the City water system. A copy of Chapter 13.04 of the Davenport Municipal Code is included in Appendix D.

New water service requests are submitted to the City Clerk/Treasurer at City Hall. Water service requests outside the service area require prior approval from the City Council. A developer or property owner is responsible for the installation of all water lines (and sewer lines) in undeveloped, platted, or replatted areas within the City limits, including the costs of construction. Engineering and construction of new water lines must conform to City standards and specifications. Building permits will not be granted by the City until infrastructure construction has met approval of the City Foreman.

3.0 BASIC PLANNING DATA

3.1 DEFINITION OF TERMS

- **Water Demand**: The volume of water required by system users to satisfy their needs.
  - **Equivalent Residential Unit (ERU)**: The numerical value associated with the average household size of single-family dwelling units. ERUs are estimated based on the total population and number of households.
  - **Average Daily Demand (ADD)**: The volume of water used by a system on an average day based on a one (1) year period.
  - **Maximum Daily Demand (MDD)**: The average rate of consumption for the twenty-four (24) hour period in which total consumption is the largest for the design year [usually July].
  - **Peak Hour Demand (PHD)**: The highest hourly flow, excluding fire flow that a water system or distribution system pressure zone is likely to experience in the design year.
- **Components of Finished Water Storage**: Storage available to serve the system is the portion of the storage structure elevated sufficiently or equipped with sufficient booster pumping capability to pressurize the system. Components of finished water storage are further defined as:
  - **Dead Storage**: Storage that is either not available for use in the system or can provide only substandard flows and pressures.
  - **Effective Storage**: All storage, other than dead storage. It is made up of the following additive components: operational, equalization and fire suppression storage:
- **Operational Storage (OS)**: Operational storage supplies water when under normal conditions the sources are off. This component is the larger of the volume required to prevent excess pump cycling and ensure that the following volume components are full and ready for use when needed, or the volume needed to compensate for the sensitivity of the water level sensors.
- **Equalization Storage (ES)**: Storage of finished water in sufficient quantity to compensate for the difference between a water system's maximum source pumping capacity and PHD.
- **Fire Suppression Storage (FSS)**: The water needed to support fire flow.
- **Standby Storage (SB)**: Standby storage provides a measure of reliability or safety factor should sources fail or when unusual conditions impose higher than anticipated demands. Normally used for emergency operation when standby power is not available, standby storage should provide water for a minimum of eight (8) hours of operation at average day demand.

- **Fire Flow Capacity**: The water system capacity, in addition to MDD, that is available for firefighting purposes within the water system or distribution system pressure zone. Adequacy of the water system fire flow capacity is determined by the local fire authority. Fire flow rates and duration have been established by the Insurance Services Office and through previous evaluations performed by the State of Washington Survey and Rating Bureau. Fire flow calculations for the system are available in Section 5.4.2. The pressure at the hydrant must also remain at or above 20 pounds per square inch (psi) for the duration of the water delivery.

- **Minimum System Pressure**: The water system must be able to provide PHD at no less than 30 psi at all service connections throughout the distribution system when all equalizing storage is depleted (WAC 246-290-230(5)). During fire suppression events, the water system must be able to provide 20 psi minimum pressure at ground level at all points throughout the distribution system. The water system must be able to provide this minimum pressure under fire-flow conditions plus the MDD rate when all equalizing and fire flow storage is depleted (WAC 246-290-230(6)).

3.2 CURRENT LAND USE AND ZONING

The City of Davenport currently incorporates 1,049 acres. A zoning map showing land use for the City is included as EX 5 in Appendix A. Of the zoned area, approximately 76 acres are Commercial, 600 acres are Public Use, 27 acres are Industrial, 201 acres are Residential I, 57 acres are Residential II, and 88 acres are Suburban. A copy of the Lincoln County Zoning map showing land use zoning for the areas surrounding the City is included in Appendix E.

3.3 CURRENT DEMAND AND WATER USAGE ESTIMATIONS

Population estimates were obtained from the U.S. Census Bureau to determine the current demand and estimated annual growth for the City of Davenport. Table 3 provides the population estimates for the City over the last 50 years.

Table 3: Population Estimates from U.S. Census Bureau

Census Year	Population Estimate	Percent Change
1960	1,494	-
1970	1,363	-8.8%
1980	1,559	14.4%
1990	1,502	-3.7%
2000	1,730	15.2%
2010	1,734	0.2%
Estimated average annual growth over last 50 years		**0.3%**

Census Year	Population Estimate	Percent Change
Estimated average annual growth over last 20 years		**0.8%**

As shown in Table 3, the growth trends from decade to decade as interpreted in the percent change in population have had a wide range. The average annual growth rate for the City over the last 50 years was calculated to be 0.3 percent. More recently, the average annual growth rate within the last 20 years was calculated to be 0.8 percent. To accommodate more future growth, 0.8 percent was selected as the predicted annual growth rate to determine future demand as is described in Section 4 of this WSP.

Table 4 summarizes the number of service connections by type within the City according to the DOH Water Facilities Inventory (WFI) Form; last updated February 23, 2016. As shown in Table 4, there were 900 total connections. According to the WFI Form, the system has been approved by DOH for a maximum of 1,148 connections.

Table 4: Existing Service Connections

Type of Connection	Number of Active Connections	Percent of Total Connections
Single Family (Full time) Residential	646	72%
Multi-Family Residential	106	12%
Non-Residential	148	16%
TOTAL	**900**	

The City tracks water usage from both the well pumping logs and service meter readings. Well pumping logs and annual billing records for water use by class were available and reviewed for 2010 and 2011. Well pumping logs include daily totalizing flow meter readings for wells 6 and 7 as well as running time in hours for the pumps. The City sources all of the water that it provides to consumers from wells 6 and 7 and does not purchase from any other water purveyors. Table 5 provides the analysis results for water produced by wells 6 and 7 in 2011.

Table 5: Well Production Rates for 2011

Month	Total Monthly (gallons)	Average Daily (gallons)	Maximum Daily (gallons)	Minimum Daily (gallons)
January	8,269,677	266,764	386,335	177,149
February	8,459,384	302,121	385,567	206,420
March	9,210,749	297,121	377,766	176,498
April	7,791,813	259,727	677,259	0*

Month	Total Monthly (gallons)	Average Daily (gallons)	Maximum Daily (gallons)	Minimum Daily (gallons)
May	9,144,185	294,974	443,365	247,495
June	13,908,441	463,615	811,194	200,904
July	22,214,029	716,582	969,760	537,444
August	30,023,950	968,515	1,076,369	782,815
September	19,469,054	648,968	874,397	370,350
October	9,479,672	697,800	550,803	185,618
November	8,164,498	272,150	386,203	183,292
December	8,726,340	281,495	410,546	187,853
ANNUAL	**154,861,792**	**455,819**	**1,076,369**	**0**
*No flow or pumping time was recorded on 4/7/2011 for either well pump.				

Additional data is available on an annual basis for the years 2011 through 2014. Water use by class is tracked by the City on an annual basis from November 1 to October 31. The water use classes that the City employs include inside water, outside water, inside commercial, outside commercial, overage only monthly, and inside water on a per cubic foot (cf) basis. The total usage recorded by the City for the period between November 1 2014 and ending October 31, 2014 was 17,404,929 cf, or 130,197,905 gallons. The City submits a Water Use Efficiency (WUE) Annual Reporting Worksheet to DOH typically in June every year. For the 2014 WUE Annual Performance Report, the estimated distribution system leakage, or the difference between the annual volume produced and authorized consumption, was 45,100,000 gallons, or 25.8 percent. The estimated distribution system leakage from the 2010 WUE Annual Performance Report was 28.6 percent. The 3-year annual average percentage of distribution system leakage is currently at 26.5 percent.

3.3.1 Equivalent Residential Units (ERUs)

Both the water production rates and the authorized consumption from 2014 were used to calculate the current ERU daily consumption and the number of ERUs for the entire water system. The current ERU value for the City's water system was calculated based on 2014 production and consumption data, where all non-commercial consumption was assumed to be residential. The total residential consumption was determined as follows:

Total Residential Consumption = Total Consumption – Commercial Consumption

Total Residential Consumption = 17,404,929 cf – 5,332,830 cf

= 12,072,099 cf

= 90,305,568 gal/year

The total number of full time residential connections for 2014 is determined as follows:

Fulltime residential connections = Full time single family homes + Full time multi-family

= 646 + 106

= 752 connections

The following equation was used to estimate the residential daily demand (RDD):

$$\text{RDD} = \frac{\text{(Total Residential Consumption 2014)}}{\text{(Total \# of Residential Connections) * (365)}}$$

$$\text{RDD} = \frac{\text{(90,305,568,gal/year)}}{\text{(752) * (365 days/year)}}$$

ERU = 329 gallons per day (GPD)

The demand of one ERU therefore is the same as the RDD, or 329 GPD. Similarly, the estimated number of commercial ERUs may be calculated using the following equation:

$$\text{Commercial ERUs} = \frac{\text{(Total annual commercial use for 2014)}}{\text{(329 ERU) * (365 days)}}$$

$$= \frac{\text{39,892,337 gallons per year commercial use}}{\text{(329 GPD/ERU) * (365 days)}}$$

= 332 ERUs

The total number of ERUs for the City of Davenport water system was estimated using the following equation:

Total No. of ERUs = Residential ERUs + Commercial ERUs

= 752 + 332

= 1,084 ERUs

3.3.2 Average Daily Demand (ADD)

The ADD is the average amount of water pumped during one 24-hour period. The current ADD was based on the ADD calculated from water usage records from 2014. The ADD/ERU was calculated from the ADD flow divided by the total number of ERUs.

Equivalent Residential Units	**=**	**1,084**
Total System ADD	**=**	**17,404,929 CF/year**
	=	**130,197,905 gal/year**
	=	**365,706 GPD (330 gpm average for 18 hr/day)**
Average Daily Demand (ADD)/ERU	**=**	**365,706 GPD/1,084 ERU**
	=	**329 GPD/ERU**

3.3.3 Maximum Daily Demand (MDD)

The MDD is the maximum amount of water pumped in a 24-hour period. The maximum amount of water used (pumped) for any given day in the year of 2014 occurred in August with a total of 1,076,369 gallons being recorded. The MDD/ERU was calculated from the MDD flow divided by the total number of ERUs.

Equivalent Residential Units	**=**	**1,084**
Total System MDD	**=**	**1,076,369 GPD (996 gpm average for 18 hr/d)**
Maximum Daily Demand (MDD)	**=**	**1,076,369 GPD /1,084 ERU**
	=	**993 GPD/ERU**

3.3.4 Peak Hourly Demand (PHD)

PHD is defined as the highest hourly flow, excluding fire flow, which a water system or distribution pressure zone is likely to experience in the design year. The PHD was calculated using the 2009 DOH Water System Design Manual (DOH Design Manual). The PHD was calculated from Equation 5-1 of the DOH Design Manual, using MDD values derived from City-provided data. The PHD is a function of the MDD, the number of ERUs, and a set of coefficients associated with the Number of ERUs. A list of the ERU coefficients can be found in Section 5.2.4 of the DOH Design Manual.

<u>Peak Hourly Demand Calculation</u> (from Equation 5-1, DOH Design Manual)

PHD = (MDD/1440)[(C)(N)+ F] + 18

where,

MDD = Maximum Daily Demand (GPD/ERU)
N = Number of ERUs
C = Coefficient Associated with Ranges of ERUs = 1.6 (for N > 500)
F = Factor Associated with Ranges of ERUs = 225 (for N > 500)

Peak Hourly Demand = 1,369 gpm

4.0 DEMAND FORECASTS

4.1 PROJECTED LAND USE AND ZONING

The City has identified several key areas with the most potential for growth over the next 20 years. These areas identified for growth for each type of land use are summarized below. The zoning map (EX 5) included in Appendix A shows the projected land use and zoning as well as the proposed service area boundary for the water system. Future City zoning may include as many as 1,165 acres, with most of the increase in incorporated land being dedicated for future residential land use.

4.1.1 Residential Land Use

There are several locations bordering or just outside current City limits where residential expansion has begun. The two prominent areas are the North Ridge Estates, located north of the City limits off Wheatland Road, and Quail Ridge Development located just within the City limits west on Jefferson Street. Once they were approved by the City, utilities for both developments, including roads, water, and sewer were established and are already incorporated into the number of DOH-approved service connections. Both of the single-family, low-density neighborhoods currently have occupied homes, but have yet to reach a full build-out with all the planned services being utilized.

There is very little undeveloped area zoned for residential development within the existing City limits beyond the two aforementioned developments. Most future residential development is expected to occur as farmland is converted along Wheatland Road and Main Street between 14th Street and the City limits.

4.1.2 Commercial and Industrial Land Use

Slow to moderate growth for commercial and industrial land use is expected for the City over the next two decades. Commercial land use has typically been confined within two blocks of Morgan Street and the southwest corner of the City, while industrial land use has been strictly along the railroad corridor. While the City's plans for commercial development include some undeveloped land that was recently replatted as a result of the construction of the new sports complex, any future industrial development is expected to occur within City limits and maintain its proximity to the railway on the southern end of the City.

The main area targeted for commercial development is along Hwy 25, adjacent to the new sports complex. As the sports complex facilities are expanded and the use of the facility continues to grow, the City expects that the highway frontage area will be developed for commercial use to support the sports facilities. Though the area has been replatted for commercial use with utility easements in place, no utilities have been installed. Other

commercial activity is expected to focus on redevelopment of existing vacant facilities along Morgan Street.

4.1.3 Public Land Use

Public land uses for the City currently include the new sports complex, wastewater treatment plant (WWTP), landfill, hospital facilities, county courthouse and offices, school facilities, pool, parks, museum, airport, fairgrounds, and cemetery. There are no projects currently planned to increase the area or add additional public facilities at this time.

Within the already zoned public land for airport use, the City provides minimal water service and fire protection from a 6-inch watermain, which terminates at the hydrant located near the Pilot's Lounge. As the airport continues to grow and provide more space to develop hangars, it is expected that an increase in demand for water service at the airport will follow. It is possible that between 10 and 15 hangars may be added in the next 20 years, which is roughly four times the current demand experienced at the airport.

4.2 PROJECTED DEMAND AND WATER USAGE ESTIMATIONS

The demand forecast for the City's water system was prepared using the current demands calculated in Section 3 of this WSP and using population growth trends from U.S. Census Bureau population estimates for the past 20 years, also as noted in Section 3. An annual population growth rate of 0.8 percent was used to estimate the current-year (2016), the 6-year (2021), and the 20-year (2033) population within the City. Per WAC 246-290-221, water purveyors are required to prepare demand forecasts for a consecutive 6-year and 20-year planning period, showing future use with and without conservation efforts being implemented. Table 6 shows a summary of the estimated population growth for the next 20 years.

Table 6: Projected Population Growth

Year	Population	Total # of ERUs
2014*	1,790*	1,084*
2016	1,819	1,101
2021	1,893	1,146
2025	1,954	1,183
2035	2,116	1,281
*ERU was calculated based on 2014 Population Estimate and 2014 Water Production and Consumption Rates		

Projections for the City's water system in the future are expected to have the same proportion of non-residential connections to residential connections; thus, an annual growth of 0.8 percent

was also used to estimate the total number of ERUs for the current-year (2016), the 6-year (2021), and the 20-year (2033) demand forecasts. The ratio of commercial consumption to non-commercial consumption within the water system was also assumed to remain the same as was noted for the current system demands in Section 3.

4.2.1 Projected ADD

Based on the current system demands outlined in Section 3 and the predicted annual growth rate of 0.8 percent, ADD for the system was estimated for the current-year, 6-year, and 20-year planning period, as summarized in Table 7 and Table 8.

Table 7: Average Daily Demand

Parameter	2014	2016	2021	2035
Population, 0.8% Annual Growth Rate	1,790	1,819	1,893	2,116
# of ERU, 0.8% Annual Growth Rate	1,084	1,101	1,146	1,281
ADD/ERU (GPD)	329	329	329	329
Total System ADD (GPD)	356,706	362,430	377,161	421,672

Conservation rates of 2 percent over the next 6 years and 5 percent over the next 20 years were set as goals by the City and have been used in estimating the difference in ADD for the established planning period. The conservation rates were established as part of the City's WUE program, specifically for improving efficiency, particularly that of the consumers. The conservation rates do not address distribution system leakage, as discussed in Section 5 of the WSP.

Table 8: Average Daily Demand with Conservation

Parameter	2014	2016	2021	2035
Population, 0.8% Annual Growth Rate	1,790	1,819	1,893	2,116
# of ERU, 0.8% Annual Growth Rate	1,084	1,101	1,146	1,281
Conservation Rate (%) over period	N/A	N/A	2%	5%
ADD/ERU (GPD)	329	329	322	313
Total System ADD* (GPD)	N/A	N/A	369,618	400,595
* Includes Conservation				

4.2.2 Projected MDD

Based on the MDD calculated in Section 3 and the annual predicted growth rate, the projected MDD estimates were prepared for the current-year, 6-year, and 20-year planning period and are shown in Table 9 and Table 10.

Table 9: Maximum Daily Demand

Parameter	2014	2016	2021	2035
Population, 0.8% Annual Growth Rate	1,790	1,819	1,893	2,116
# of ERU, 0.8% Annual Growth Rate	1,084	1,101	1,146	1,281
MDD/ERU (GPD)	993	993	993	993
Total System MDD (GPD)	1,076,412	1,093,293	1,137,978	1,272,033

Conservation rates of 2 percent for over the next 6 years and 5 percent over the next 20 years were set as goals by the City and have been used in estimating the difference in MDD for the established planning period.

Table 10: Maximum Daily Demand with Conservation

Parameter	2014	2016	2021	2035
Population, 0.8% Annual Growth Rate	1,790	1,819	1,893	1,954
# of ERU, 0.8% Annual Growth Rate	1,084	1,101	1,146	1,281
Conservation Rate (%) over period	N/A	N/A	2%	5%
MDD/ERU (GPD)	993	993	973	943
Total System MDD* (GPD)	N/A	N/A	1,115,218	1,208,431
* Includes Conservation				

4.2.3 Projected PHD

The PHD, as shown in Table 11 and Table 12, for the current-year, 6-year, and 20-year planning period was based on the calculation used in Section 3. The same ERU coefficient (1.6) and factor (225) was used to calculate the future PHD in both the conservation and standard scenarios.

Table 11: Peak Hour Demand

Parameter	2014	2016	2021	2035
Maximum Daily Demand (GPD)	1,790	1,819	1,893	1,954
# of ERU, 0.8% Annual Growth Rate	1,084	1,101	1,146	1,281
Total Peak Hourly Demand (gpm)	1,369	1,388	1,438	1,587

Conservation rates of 2 percent over the next 6 years and 5 percent over the next 20 years were set as goals by the City and have been used in estimating the difference in MDD for the established planning period. The MDD/ERU value from Table 10, which incorporates the conservation rates, was used to calculate the PHD with conservation efforts.

Table 12: Peak Hour Demand with Conservation

Parameter	2014	2016	2021	2035
Maximum Daily Demand* (GPD)	1,790	1,819	1,893	1,954
# of ERU, 0.8% Annual Growth Rate	1,084	1,101	1,146	1,281
Total Peak Hourly Demand* (gpm)	N/A	N/A	1,408	1,507
* Includes Conservation				

4.2.4 Projected Water Demand Summary

The ADD, MDD, and PHD projections (without conservation) are summarized in Table 13.

Table 13: Projected Water Demand Summary

Year	# ERUs	ADD (GPD)	MDD (GPD)	PHD (gpm)
2016	1,101	362,430	1,093,293	1,388
2021	1,146	377,161	1,137,978	1,438
2035	1,281	421,672	1,272,033	1,587

5.0 SYSTEM ANALYSIS

The DOH Design Manual was used as the primary standard for analyzing the City's water system. According to the DOH Design Manual, the design engineer is required to consider the water system operation under a full range of expected demands and emergency conditions.

Construction for water system components is done in accordance with the City of Davenport Standard Plans, the Washington State Department of Transportation's (WSDOT) Standard Specifications for Road, Bridge, and Municipal Construction, the American Public Works Association (APWA) standard specifications, the American Water Works Association (AWWA) standards, the American National Standards Institute (ANSI) standards, and the DOH Water System Design Manual. Copies of the City's Standard Plans for water system construction are included in Appendix F and are made available to all contractors for distribution related facility projects. The City also requires all project specifications and plans for water system improvements to include specific references for each component (e.g. pipe materials, bedding, installation procedures, installation testing, and disinfection).

5.1 WATER QUALITY ANALYSIS

The standards and requirements of the SDWA are mandated in the State of Washington for all public water systems. The implementation and enforcement of the SDWA is the responsibility of DOH. The Rules and regulations of the State Board of Health Regarding Public Water Supplies, Chapter 246-290 of the WAC for Group A Public Water Supplies, are the state administrative regulations governing the City of Davenport's public water system.

The SDWA specifies a definite schedule of water quality monitoring, detailed record keeping, and public notification requirements. Monitoring parameters have been established for bacteriological, inorganic chemical, organic chemical, turbidity, and radionuclide parameters based on the source of water and the size of the water system. These parameters are monitored because they have a potential impact on human health if they exist in a water system in concentrations that exceed its maximum contaminant level (MCL). The SDWA specifies whether a daily, weekly, monthly, or annual sampling frequency is required for each parameter and requires that when these MCL concentrations are exceeded, the public must be notified by a specified method and on a given schedule. State accredited labs are required for all water quality analysis testing as part of the SDWA and in accordance with WAC 246-290-300.

The reporting procedures for the SDWA are listed in WAC 246-290, Part 7. If the MCLs are exceeded, the City as the water purveyor must follow the actions described in WAC 246-290-320, including notifying DOH and the public. Public notification efforts should be coordinated with DOH Eastern Region engineering staff. Mandatory language for public notices is provided in Part 7 of WAC 246-290. Generally, the notice shall be written in an easily understood format without using overly technical language. A U.S. Environmental Protection Agency (EPA) document entitled "Public Notification Handbook for Public Drinking Water Supplies" was

created as a reference for use by utility companies and municipalities. It further explains the Notification Requirements and gives sample public notices.

DOH requires various types of records pertaining to the operation and analysis of the City's water system to be kept for a certain period of retention. The City records customer complaints and immediately acts to address them. A provision of the SDWA allows for individual lawsuits to be initiated against water systems in violation of the Act. Accurate record keeping is an effective way to reduce liability in such cases.

Table 14 shows the water quality tests that are routinely conducted on the City's water system:

Table 14: Minimum Monitoring Requirements

Monitoring Parameter	Monitoring Frequency
Bacteriological	2 per month from representative points in distribution system; as directed by DOH for source water
Lead and Copper	10 samples every three years in accordance with 40 Code of Federal Regulations (CFR) 141.86(a) - (f), 141.87, and 141.88
Inorganic Chemical and Physical	1 sample per source every three years
Turbidity	As directed by DOH
Total Trihalomethanes (TTHM) and Haloacetic Acids (HAA5)*	2 samples must be taken per year during the month of warmest water temperature from locations representing the maximum residence time
Herbicides, Pesticides, and Insecticides	1 sample per source every three years or as allowed by State waiver (due by December 2013)
Radionuclides	1 sample per source every four years
Volatile Organic Chemicals (VOCs)	1 sample every three years, or as allowed by State waiver
Synthetic Organic Chemicals (SOCs)	As allowed by State waiver (through 2013) or as directed by DOH
Nitrates	1 sample per year
Other contaminants	As directed by DOH

*In accordance with WAC 246-290-300(6)(b)(i)(A), the City will be required to monitor in accordance with 40 CFR 141.132(b)(1)(i) until October 1, 2014, after which date the City shall be required to monitor in accordance with 40 CFR 141.620, 141.621, and 141.622

Primary chemical and physical substances, as listed in WAC 246-290-300(4)(a)(i), include antimony, arsenic, asbestos, barium, beryllium, cadmium, chromium, cyanide, fluoride, mercury, nickel, nitrate (as N), nitrite (as N), selenium, sodium, and thallium. Secondary substances, as

listed in WAC 246-290-300(4)(a)(ii), include chloride, color, hardness, iron, manganese, specific conductivity, silver, sulfate, total dissolved solids (TDS), and zinc.

The City produces an annual Consumer Confidence Report (CCR), which summarizes results of the previous year's water quality monitoring efforts, as required for Group A public water systems under 40 CFR Part 141 Subpart O. The intent of the report is to inform the water system's users whether or not the system is complying with state and federal health standards.

5.2 HYDRAULIC ANALYSIS

A hydraulic analysis of the current water system was conducted using a computer hydraulic modeling program (Bentley WaterCAD V8i). The model was built using a previous hydraulic model created by Century West in 2006 for the last SWSMP update based on the overall water system map. Updates to the system, equipment data, well pumping information, and hydrant flow test data provided by the City were incorporated into the model. Elevations for pipe junctions were verified using Google Earth. The entire system is considered one pressure zone, as there are no devices or equipment employed by the system for reducing or increasing system pressure.

After the initial physical model was updated, it was calibrated using hydrant flow test data as shown in Table 15, as provided by the City's hydrant test records. A sample of approximately a quarter (29 of 116) of the system hydrants were used to compare actual hydrant pressures from flow tests to those predicted by the model.

Table 15: Hydrant Flow Comparison: Actual vs. Modeled

WaterCAD Node	Location	Elevation (ft)	Fire Flow Available (gpm)	Modeled Pressure (psi)	Field Testing	
					STATIC (psi)	RESIDUAL (psi)
H-1	13th St. & Monroe St.	2,422	1,758	40.8	44	32
H-4	12TH St. & Monroe St.	2,419	1,843	42.1	40	32
H-11	4th St.(southern end)	2,416	847	42.9	38	34
H-14	3rd St. & Jefferson St.	2,408	2,005	46.1	41	47
H-19	1st St. & Marshall St.	2,394	2,053	51.4	46	42
H-22	Alley between Logan St. & Sinclair St.	2,426	1,770	36.1	46	42
H-28	9th St. & Lincoln St.	2,416	1,704	40.7	40	38
H-30	Gunning St. & Sinclair St.	2,401	1,204	47.8	47	42
H-31	14th St. & Sinclair St.	2,393	1,784	51.4	50	46
H-37	15th St. & Hwy 2 (WSDOT)	2,412	475	43.3	11	27
H-43	9th St. & Morgan St.	2,373	3,500	60.1	57	54
H-47	7th St. & Park St.	2,374	941	59.8	46	44

WaterCAD Node	Location	Elevation (ft)	Fire Flow Available (gpm)	Modeled Pressure (psi)	Field Testing	
					STATIC (psi)	RESIDUAL (psi)
H-50	Harker St. & Park St.	2,384	3,051	55.3	56	52
H-52	5th St. & Marshall St.	2,414	1,844	42.9	44	40
H-59	15th St. & Main St.	2,435	785	34.4	33	32
H-64	7th St. & Jefferson St.	2,415	2,871	43.2	43	40
H-70	8th St. & Main St.	2,421	1,143	40.3	37	35
H-74	11th St. & Washington St.	2,428	2,802	37.7	34	33
H-84	Hwy 25- County Shop	2,416	1,081	39.5	39	26
H-88	Airport	2,409	982	44.3	42	32
H-95	1st St. & Morgan St.	2,398	2,172	48.3	46	42
H-97	2nd St. & Sinclair St.	2,409	2,633	43.4	42	39
H-98	Hospital (front)	2,427	1,787	34.8	30	23
H-101	3rd St. & Maxwell St.	2,395	2,465	51.3	48	44
H-104	5th St. & Washington St.	2,408	3,500	46.0	52	48
H-106	5th St. & Sinclair St.	2,420	1,863	39.1	34	30
H-115	10th St. & Merriam St.	2,412	2,125	43.9	44	42
H-117	11th St. & Jefferson St.	2,423	3,225	40.9	41	39

Of the 29 total hydrants analyzed for system calibration purposes, 13 and 19 hydrants had modeled pressures within 5 and 10 percent of the static pressures recorded during field tests, respectively. Twenty-five out of the 29 hydrants analyzed had modeled pressures within 20 percent of the recorded static pressure. Assuming these 29 hydrants are a representative sample of the overall system, a reasonable estimate is that 85 percent of the hydrants are within a 20 percent margin of difference between static recorded pressures from field testing and model generated results.

Areas where the hydrant static pressures from field testing and modeled pressure results coincided became the initial points for calibration efforts. The model was calibrated using an iterative process, mostly through adjusting pipe characteristics and roughness coefficients. System demand was spread evenly throughout the system by dividing the overall demand(s) by the number of nodes.

The existing system was modeled without any system demands, with current ADD, MDD, and PHD, and with both the 6-year and 20-year ADD, MDD, and PHD demands. System pressures were analyzed under each scenario to detect areas of low pressure (less than 30 psi). Areas for which pressures drop below 30 psi include:

- **Near Tank No. 3**: Pressures are between 12 and 15 psi, but there are no demands or services located near this low pressure zone.

- **Southwest Quarter of Town**: In the ADD and MDD demand scenarios for current-year, 6-year, and 20-year planning periods, pressures between 30 psi and 40 psi were prevalent in the southwest area of town, approximately from 7th Street west to the City limits and south of Morgan Street. In the PHD demand scenarios, the 30 to 40 psi pressure range extends to approximately 5th Street, south of Morgan Street while pressures dip below 30 psi along Main Street west of 13th Street and around the Quail Ridge development, west of 14th Street.

- **Northeast Loop**: The area in the northeast part of the City, including Tank 2, the courthouse and county facilities, the hospital, the county shop, and the new sports complex, all have pressures between 30 and 40 psi during ADD, MDD and PHD scenarios.

In addition to running the ADD, MDD, and PHD demand scenarios, fire flow demands were also modeled. The fire flow demand scenario analyzed flow available to the hydrants with MDD conditions also applied. For this analysis, it was assumed that tank elevations were at or above minimum elevations so the system was not trying to provide fire flow and storage volume in the tanks at the same time.

Table 16 summarizes the results of the fire flow analysis for the existing system under current MDD conditions. A minimum of 20 psi for the system was set as a requirement of the fire flow analysis. Fire flow rate and duration requirements are described in Section 5.4.2.

Table 16: Existing System Fire Flow Analysis with Current MDD Demand

Fire Flow Demand (MDD + FF)	Passed		Failed	
	No. of Hydrants	Percent	No. of Hydrants	Percent
500 gpm	114	98%	2	2%
750 gpm	111	96%	5	4%
1,000 gpm	100	86%	16	14%
1,500 gpm	84	72%	32	28%

Hydrant locations (with WaterCAD nodes listed in parentheses) where available fire flow is less than 1,000 gpm include:

- Less than 500 gpm: WSDOT facilities south of Hwy 2 (H-37) and Ross Street and 11th Street (H-87)

- Between 500 gpm and 749 gpm: 15th Street and Maxwell Street (H-58), 15th Street and Main Street (H-59) and 14th Street and Main Street (H-60)

- Between 750 gpm and 999 gpm: 8th Street south of Monroe Street (H-7), 7th Street and Park Street (H-47), 14th Street and Maxwell Street (H-61), 8th Street and Main Street (H-70), County Shop on Hwy 25 (H-84), the Airport (H-88), Gunning Road north of Hwy 2 (H-89), Fairground near the main building (H-91), Fairgrounds near horseshoe pits (H-92), 7th Street and Merriam Street (H-111), and 7th Street south of Hwy 2 (H-112)

Tabulated results and graphics representing system pressures and available fire flow for hydrants from the WaterCAD modeling scenarios for the existing system are included in Appendix G.

5.3 LEAK DETECTION ANALYSIS

A leak detection survey was completed between September and October 2006 by Hughes Supply, Inc., Utility Service Group. An estimated 9.78 miles of pipe was surveyed. Six leaks were found as a result of the survey, as well as one consumer-side leak. It was estimated that the water loss due directly to these leaks was approximately 43,920 gallons per day (GPD), or 16,030,800 gallons per year. Five of the six leaks detected were found in main lines while the remaining system leak was attributed to a valve. All six leaks were repaired by the City Public Works department.

Leak detection services were again employed in September 2011 by Utility Services Associates of Burien, Washington. Approximately 46,860 linear feet (lf) of pipe, 80 hydrants, 176 valves, and 48 services were surveyed during the leak detection inspection. The results of this investigation found 3 hydrants and 1 service to be leaking, with an estimated loss of 16,560 GPD, or 6,044,400 gallons per year. The service connection leak detected along Morgan Street was classified by USA as a Class II leak, which are defined as leaks that display water losses significant enough to be monitored on a regular repair schedule. The 3 hydrant leaks, 2 of which were located along Morgan Street and the third on Spring Street, were classified as Class III leaks, or relatively small leaks that should be repaired as workload permits. An additional "undefined" leak was noted in the report for the hydrant located near the hospital entrance. All these leaks were repaired by the City Public Works department in fall and winter 2011/2012.

As a result of the hydrant leaks detected, USA suggested in their leak detection report that "an aggressive hydrant maintenance program" be initiated by the City to further reduce system losses. A copy of the 2011 leak detection report prepared by USA is included in Appendix H.

5.4 EVALUATION OF EXISTING FACILITIES

5.4.1 Wells/Pumping Stations

The building, equipment, and appurtenances associated with Well 6 are generally in good condition. As the larger producer of raw source water, Well 6 is considered the primary pumping station for the system. A new soft start controller for the pump was installed in 2011. The main issues of concern are the declining yield of Well 6, as is discussed in Section 6.1, and the lack of back-up power available for the well and pumping station.

The pumping station at Well 7 has required more maintenance over the recent past than Well 6. Some of this maintenance included repair of a stretched shaft head for the pump and multiple issues resulting from the installation of a new pump motor; including leaking and dripping of oil as well as a back-spinning issue. New variable frequency drive (VFD) controls were installed for the system controls in the Well 7 pumping station as a result of the extra work needed to fix the pump motor. By itself, the pumping station for Well 7 cannot meet peak demands, including the current and forecasted MDD and PHDs outlined in Table 12. Well 7 has also experienced declining well yields, as detailed in Section 6.1. Additionally, the City Maintenance Supervisor pointed out that the pumping station building at Well 7 lack windows, which prevents observation and communication efforts when City crews are working on or between Tank 2 and Well 7.

Specific equipment information for the pumping stations is provided below:

5.4.1.1 Well No. 6 Pumping Station (11th Street and Jefferson Street)

Peerless Pump with US Motor- 200-hp High Thrust, Frame # 445TPH, ID # C2694-03-675 85-11609NRR
Ben Shaw MX2 Control Soft Start Drive
10-inch Master Meter Mag Type
Liquid 5.5 percent Sodium Hypochlorite (chlorine bleach) with LMI Milton Roy injector pump

5.4.1.2 Well No. 7 Pumping Station (Nichols Street and Ross Street)

Pump with US Motor (Emerson)- 200-hp, 1785 RPM, Frame # H445TPA, ID # L07-30188999-6T-01
Yaskawa Varispeed E7 Drive
10-inch Master Meter Mag Type
Liquid 5.5 percent Sodium Hypochlorite (chlorine bleach) with LMI Milton Roy injector pump

5.4.2 Storage Tanks

All three storage tanks have been well maintained and are considered in good condition. Combined, they provide a total of 700,000 gallons of storage capacity for the water system. With two of the tanks being elevated and the third ground-level tank being located at an elevation above most of the City, the tanks are able to provide flow and pressure to the system without mechanical power, including power outages. This is important for system reliability as there are currently no permanent backup power sources for either pumping station.

Tank dimensions and control settings are as follows:

5.4.2.1 Tank No. 1

Maximum Storage Capacity: 50,000 gallons (6,685 cf)

Type:	Elevated, Circular Steel Tank
Dimensions:	20 ft diameter x 23 ft tall (tank only)
Ground Elevation:	2427 ft MSL
Tank Base Elevation:	2484 ft (+57 ft)
Minimum Water Elevation (Alarm level):	2494 ft (+67 ft)
Initial Water Elevation (Pump On):	2499 ft (+72 ft)
Maximum Water Elevation (Pump Off):	2504 ft (+77 ft)

5.4.2.2 Tank No. 2

Maximum Storage Capacity:	150,000 gallons (20,054 cf)
Type:	Elevated, Circular Steel Tank
Dimensions:	38 ft diameter x 20 ft tall (tank only)
Ground Elevation:	2427 ft MSL
Tank Base Elevation:	2485 ft (+58 ft)
Minimum Water Elevation (Alarm level):	2495 ft (+68 ft)
Initial Water Elevation (Pump On):	2508 ft (+69 ft)
Maximum Water Elevation (Pump Off):	2515 ft (+75 ft)

5.4.2.3 Tank No. 3

Maximum Storage Capacity:	500,000 gallons (66,845 cf)
Type:	Ground-level, Circular Steel Tank
Dimensions:	48 ft diameter x 45 ft tall
Ground Elevation:	2475 ft MSL
Tank Base Elevation:	2475 ft (+0 ft)
Minimum Water Elevation (Alarm level):	2495 ft (+20 ft)
Initial Water Elevation (Pump On):	2507 ft (+26 ft)
Maximum Water Elevation (Pump Off):	2515 ft (+32 ft)

With the above tank dimension and control settings, storage volumes as defined in Section 3 and in the DOH Design Manual are as follows:

5.4.2.4 Effective Storage

Tank No. 1	=	50,000 gallons
Tank No. 2	=	150,000 gallons
Tank No. 3	=	500,000 gallons
TOTAL	=	700,000 gallons

5.4.2.5 Operational Storage (OS)

Operational Storage was calculated based on the DOH Design Manual's guideline of the 2.5 times the maximum pumping capacity, based on 6 pump starts per hour with a 3 minute run time per start.

OS = Maximum Pumping Capacity = (1,400 gpm * 6 * 3 min.) (2.5) =63,000 gallons *2.5

5.4.2.6 Equalizing Storage (ES)

Because the available pumping capacity of 2,085 gpm is greater than the current estimated PHD of 1,404 gpm, ES was calculated in accordance with 9.0.3.1 Continuous Pumping, where the volume of ES needed using constant pumping is about 10 to 25 percent of the MDD (Walski 2000)

ES = MDD (0.10) = (1,103,640 gallons)(0.10) =110,364 gallons

5.4.2.7 Standby Storage (SB)

Because the water system sources can provide more than ADD with the lead pump out of service, SB was calculated based on the DOH recommended volume of no less than 200 gallons/ ERU.

SBTMS = 200 gallons (# of ERUs) = (200 gallons)(1,082 ERUs) =216,400 gallons

5.4.2.8 Fire Suppression Storage (FSS)

Fire flow rates and duration of fire flow for fire suppression storage have been established by Insurance Services Office and through previous evaluations performed by the State of Washington Survey and Rating Bureau. The largest estimated potential fire flow demands within the City's water system have been identified as the hospital, the high school facilities, and the grain elevator facilities. The maximum fire flow required for any of these facilities would be between 3,000 and 4,000 gpm. The minimum duration for fire flow suppression for the City is 120 minutes.

FSS = FF (tm) = (3,000 gpm)(120 minutes) =360,000 gallons

From the storage volumes calculated above, it can be determined that the water system has available capacity to provide OS + ES + SS (389,764 gallons), or to provide OS + ES + FSS (533,364 gallons) as required in Chapter 9 of the DOH Design Manual. Nesting of storage volumes is allowed by the City of Davenport Fire Department. A letter from the Fire Department is included in Appendix D.

5.4.3 Distribution System, Hydrants, and Services

The City is responsible for maintaining approximately 16.7 miles of pipe within its water system, ranging in size from 1.5-inch diameter to 12-inch diameter. Approximately 13.6 percent of the distribution system is 4 inches in diameter or less. In several instances, the smaller diameter pipes (4 inches or less) result in less than adequate fire flows (H-37 and H-87). As described in Section 5.2, more than 40 percent of the water system, particularly in the southwest and northeast areas of the City, experience pressures less than the recommended 40 psi for ADD, MDD, and PHD scenarios. The previous SWSMP also pointed out that the City's distribution system was originally installed on an every-other-street basis, which resulted in large loops and long service connections, both of which result in lower end user pressures. Dead-ends within the system experience water quality and pressure issues and result in the greatest number of consumer complaints.

Much of the piping within the distribution system has been in use for 40 or more years. As pipes age, they are more likely to deteriorate and/or lose capacity, depending on material type. AC pipe is very susceptible to corrosion from internal calcium leaching. This leaching often causes a reduction in the effective cross-section of the pipe as well as a loss of rigidity and mechanical strength. One of the largest and most critical pipe runs, from the Well 6 pumping station to Tank 3 along Jefferson Street and 9th Street is a mix of 10-inch and 12-inch AC pipe and 10-inch steel pipe, totaling approximately 5,350 lf, much of which has been in service for nearly 40 years. The typical life expectancy of AC pipe, depending on soil conditions and water quality, is between 40 and 60 years. Thus, it is likely that portions or the entire critical main between the primary pumping station and largest reservoir will need to be replaced within the 20-year planning period.

The system has had multiple leak detection surveys performed in the past decade. The latest leak detection survey, notes that the hydrants are another area where leaking has occurred and is likely to continue. As part of the hydrant pressure testing procedure, public works crews note the condition and any deficiencies observed for each hydrant. Hydrants are repaired or replaced as necessary as part of the operation and maintenance (O&M) program outlined in Section 8.

As noted in Section 3.2, the WUE Annual Performance Reports for 2010 and 2011 estimated distribution system leakage was as 28.6and 22.3 percent, respectively, with a three year average of 23.6 percent. Leak detection surveys, including the most recent one completed in September 2011, discovered only small leaks within the distribution system which account for less than 4 percent of the average daily demand. This indicates the most likely source of the discrepancy in use is related to metering, either the source or end use meters (service meters), or both.

All services within the service area have meters including City owned facilities as well as commercial and public services. As required by state mandate, for several years the City has actively been replacing all service meters that contain lead with new radio-read capable meters to meet the 2014 deadline. The City has invested approximately $70,000 a year since

committing to the service meter replacement program. Meters are installed by the public works crew as schedule and resources allow. Installation of the new service meters is a key element of the City's WUE program, as described in Section 6.2, as part of the commitment to replace aging and leaking distribution system components.

Worksheet 6-1 from the Water System Design Manual has been completed for the City of Davenport's water system and is included in Appendix C.

5.5 SUMMARY OF SYSTEM DEFICIENCIES

System deficiencies are listed by system component in the subsections below.

5.5.1 Wells/Pumping Stations

- Well 6, the largest producing source for the system, does not have a backup power source.
- Well 7 is not able to meet current or future MDD or PHD when Well 6 is down.
- The pumping station building for Well 7 lacks any windows making communication difficult when staff is working between Tank 2 and the building.
- Both Wells 6 and 7 have experienced declining yields (see Section 6.1)

5.5.2 Storage Tanks

- No deficiencies to report.

5.5.3 Distribution System, Hydrants, and Services

- Approximately 13.6 percent of the system is comprised of 4-inch diameter or smaller distribution piping, which negatively impacts the system's ability to provide fire flows while maintaining adequate system pressure.
- Complaints have been received regarding inconsistent flow and low pressure, including near 2nd Street and Washington Street, and at various locations in the system where dead ends occur.
- Service connections are often very long, which also reduces the consumer end pressure as a result of water mains being located only every other street.
- Much of the distribution system piping has been in service for 40 or more years, which often results in reduced capacity and a greater susceptibility to leaks and pipe failure.
- One of the critical transmission mains includes aging AC piping between Well 6 and Tank 3.
- Low pressures (less than 40 psi) have been noted for several large portions of the City (southwest and northeast).

- Two (2) hydrants within the system are not capable of providing at least 500 gpm of flow; an additional 7 cannot provide 1,000 gpm.

5.6 RECOMMENDED SYSTEM IMPROVEMENTS

Based on the modeling analysis using WaterCAD, feedback from City staff, and the above noted deficiencies, the following upgrades or improvements are recommended for the system. The distribution system piping improvement locations are highlighted on EX 6 in Appendix A. The proposed distribution system improvements that are replacing existing piping are denoted with bold text.

5.6.1 Wells/Pumping Stations

- If well yields continue to decline, possible deepening of the well(s) may need to be considered.

5.6.2 Storage Tanks

- If well yields continue to decline, additional storage capacity may be necessary to provide all the storage volumes required by DOH.

5.6.3 Distribution System, Hydrants, and Services

- **Morgan Street-1st Street-Maxwell Street-3rd Street Loop Improvements**- upgrade from 4-inch to 8-inch and 6-inch PVC, including approximately 2,300 lf of 8-inch PVC and 150 lf of 6-inch PVC.

- Contract for Leak detection service, and continue hydrant maintenance and/or replacements to prevent leaking.

- Complete meter replacement program and calibrate existing meters as resources allow, improving accuracy of WUE program.

- **14th Street between Morgan and Merriam streets**- new 8-inch PVC (eliminate dead end), approximately 430 lf.

- **7th Street between Maxwell and Washington streets**- new 8-inch PVC (improve fire flows to school), approximately 520 lf.

- **13th Street between Merriam and Washington streets**- upgrade from 6-inch to 8-inch PVC, approximately 1,160 lf.

- **7th Street between Merriam and Marshall streets** - new 8-inch PVC (connect loops), approximately 390 lf.

- **8th Street between Monroe and Jefferson streets** - new 10-inch PVC (connect loops), approximately 590 lf.

- **3rd Street between Washington and Adams streets** - new 8-inch PVC, approximately 270 lf.
- **11th Street between Ross and Sinclair streets** - new 6-inch PVC (eliminate dead end), approximately 300 lf.
- **11th Street between Morgan and Jefferson streets** - new 8-inch PVC, approximately 2,275 lf.
- **5th Street between Ross and Sinclair streets** - new 8-inch PVC, approximately 295 lf.
- **7th Street between Sinclair and Logan streets** - new 8-inch PVC, approximately 410 lf.
- **McInnis Road** – new 10" loop around sports complex.
- **9th Street between Jefferson and Tank 3** - Replace the 10-inch AC transmission watermain with 10-inch PVC, approximately 4,120 lf.

6.0 WATER RESOURCE ANALYSIS

6.1 SOURCE ANALYSIS

The City utilizes groundwater by means of two wells to supply its water system. The City has a total of six water rights with priority dates ranging from 1913 to 1973. Table 17 summarizes these water rights. Documentation for the City of Davenport's water rights is provided in Appendix I.

Table 17: Summary of Water Rights

Priority Date	Record No.	Application No.	Permit No.	Certificate No.	Quantity		Purpose
					GPM	Acre-Feet	
1/1/1913	G3-*00874S	874	-	788	500	525	Municipal
10/14/1947	G3-*00650C	650	737	385	350	425	Municipal
9/18/1957	G3-*04690C	4690	4408	3677	280	336	Municipal
4/5/1961	G3-*05893CWRIS	5893	5615	4317	120	48	Irrigation
7/24/1970	G3-00702C	11094	G3-00702P	G3-00702C	450	396	Municipal
9/11/1973	G3-21733C	-	-	G3-21733C	1550	1157	Municipal

In 2009, the City was able to consolidate water rights to reflect current system operations. The superseding certificates reassigned the sources and set total withdrawal amounts for the system. The consolidated water rights (under certificates G3-21733, G3-00702, 3677-A, 385-A, and 788-D) authorize the City to draw water from two source wells (Well 6 and Well 7) for a total of 3,130 gpm and 2,503 acre-feet per year, continuously, each year, for the City's water supply.

Since the construction of the first well and tank at the beginning of the 20th century, the City has developed seven municipal wells. Additionally, the City has developed one irrigation well at the cemetery.

Table 18 summarizes information from DOH and the Washington State Department of Ecology (DOE) for the City's municipal wells. No information could be found pertaining to the Well 1, which was believed to have been constructed at the same time as the first 50,000-gallon tank (Tank 1) in 1909 and later replaced by Well 2.

Based on the current estimated combined pumping rates of Well 6 and Well 7, which total 2,085 gpm, the total water right of 3,130 gpm is more than sufficient for the current system demands,

with the availability of up to an additional 1,046 gpm if another source were to be added or an existing source modified. The total annual amount authorized, which equates to roughly 815,606,127 gallons, also accommodates the current demand of less than 200,000,000 gallons per year, as well as the 6-year and 20-year projected demands. It is not anticipated that any additional water rights are needed within the next 20 years for the City's water system. Any changes in withdrawal locations would need to be modified for the existing rights if found to be necessary.

Table 18: Summary of Municipal Well Log Information

Well No.	Well Log ID*	Well Tag	Location	Dimensions		Original Static Water Level (ft bgs)	Year Installed	Year Abandoned
				Depth (ft)	Diameter (in)			
2	150649	N/A	11th St & Washington St	503	15	172	1914	N/A
3	150653 (C)/ 150650 (D)	N/A	NE ¼ of NE ¼ of Section 21, T25N, R37E	722	16	50.5	1948	1995
4	292772 (C)/ 253459 (D)	N/A	5 miles north of Hwy 2 & Hwy 25	302	12	52	1960	1999
5	292771 (C)/ 253460 (D)	N/A	900 Jefferson St	501	12	89	1962	1999
6	150651	ABR08 1	11th St & Jefferson St	975	18	220	1975	N/A
7	161002	ABJ06 1	Ross St & Nichols St	845	16	265	1995	N/A

*DOE Well Log IDs: (C) ID number is for construction, (D) ID number is for decommissioning

Table 19 summarizes the Water Rights Self-Assessment for existing, six, and twenty year planning periods. The system capacities shown incorporate all four the municipal water rights assigned to the City of Davenport for the two source wells. A draft of this WSP was reviewed by DOE in May 2013 pertaining to the water right information. The agency reviewer concurred that the City has six ground water rights, all of which were consolidated/integrated through the approval of change report of exams in 2009. They also confirmed the total authorized instantaneous withdrawal (Qi) is 3,130 gpm, and total annual quantity (Qa) is 2,503 acre-ft, associated with sources Well 6 and Well 7. DOE concluded based on the information presented in this WSP, the City has adequate water right quantity to support its current operations, as well as for the 6-year and 20-year anticipated growth.

Table 19: Water Rights Self-Assessment

Demand Period	Maximum Instantaneous Flow Rate (Qi)	Maximum Annual Volume (Qa)
Existing System – Pumping Capacity	2,085 gpm	N/A
Existing System Demands (PHD for Instantaneous, MDD *365 Annual)	1,388 gpm	398,327,960 gallons
6Yr Projected System Demands (PHD for Instantaneous, MDD *365 Annual)	1,438 gpm	415,056,010 gallons
20Yr. Projected System Demands (PHD for Instantaneous, MDD *365 Annual)	1,587 gpm	464,179,211 gallons
Municipal Water Rights Available	3,130 gpm	815,606,127 gallons
Demands Met by Available Water Rights	Yes	Yes

6.1.1 Columbia Basin GWMA Efforts

The Columbia Basin GWMA, made up of local citizens, stakeholders, industry, and other leaders was created as a non-regulatory, volunteer organization whose main goal was to protect the groundwater common to the Columbia Basin aquifer system. The area encompasses approximately 8,300 square miles within central Washington. The GWMA was first designated in 1998 in response to concerns about elevated nitrate-N concentrations in the groundwater within Franklin, Grant, and Adams counties. The Columbia Basin GWMA Plan was created in 2001, has been adopted by the Boards of Commissioners for Adams, Franklin, Lincoln, and Grant counties, and certified by DOE. The GWMA Plan provided recommended strategies and practices to be implemented on a voluntary basis within the four-county area to reduce or eliminate the need for state and federal agency mandated controls with respect to quality and quantity.

In 2009, the GWMA began efforts on their groundwater modeling project to identify the mechanisms and magnitudes of groundwater use and recharge in the four-county area. The groundwater modeling project led to the preparation of the Municipality Groundwater Supply Report, completed in November 2012. The GWMA prepared the comprehensive report, which reviewed basic information and issues associated with groundwater supply conditions for the twenty-five municipalities within the GWMA. Individual reports were also developed and provided to each municipality, including the City of Davenport. A copy of the Municipal Groundwater Supply Report and the City of Davenport Groundwater Supply Report are included in Appendix J. Topics that were addressed within the groundwater supply reports include:

- Current well capacity and projected future demand
- Well construction

- Groundwater supply sources, including aquifer identification
- Water levels in municipal supply wells
- Groundwater geochemistry and age
- Potential future water supply options

The City of Davenport Groundwater Supply Review report identified wells 6 and 7 as the primary sources for the public water supply and that both were pumping ancient groundwater. Both wells pump from the Grande Ronde Basalt aquifer. Geochemical analysis from the two source wells suggested that both are pumping water from primarily Pleistocene aged recharge portions of the basalt aquifer system, estimated to have a Carbon14 age of 23,070 years old, with little or no modern influence or recharge.

Static and dynamic water levels were also reviewed for the past and present wells supplying the City of Davenport. The Groundwater Supply Review report noted that City staff had observed static level declines for Well 7. The GWMA also concluded that based on City and DOE static water level data, declines in the vicinity of the City range from -1.0 ft to as much as -10.0 ft per year. More specifically, Well 2 (emergency backup source) has experienced a decline rate of approximately -3.3 ft per year. The estimated decline rate is -1.0 ft per year for Well 6. One exception to the general static level declining trend was Well 1 that may be open to the Wanapum basalt, which has experienced decline rates less than the Grande Ronde Basalt portion of the aquifer system. Groundwater level measurements are currently collected by GWMA representatives at least semiannually and will continue to do so through 2014. After 2014, the City will be responsible for collecting ground water measurement, also collected semiannually, typically once in the spring and again in the fall.

According to the SWSMP, both wells 6 and 7 have experienced declines in yields since they were initially drilled. Well 6 was capable of pumping 1,550 gpm when it was originally developed in 1975 while Well 7 produced 900 gpm when it was initially developed in 1995. Currently, wells 6 and 7 produce 1,400 gpm and 685 gpm, respectively. Effectively, this equates to 10 percent decline in production for Well 6 and a 24 percent decline for Well 7. The GWMA predicted that dynamic water levels during the maximum pumping season (summer) would be approximately 330 ft bgs to 740 ft bgs by 2060 given the data and trends presented in the Groundwater Supply Review, subject to future changes in pumping patterns and well conditions. The GWMA also noted a “very real potential for groundwater supply shortfalls during maximum periods of dynamic drawdown (pumping) in the next 10 to 20 years.”

Non-groundwater sources for supplying public water systems are usually limited to surface water sources and/ or water reuse. The City of Davenport is located within the Lower Lake Roosevelt WRIA. Surface water bodies near and around the City of Davenport include the Cottonwood Creek system, which flows through the City and into the Hawk Creek system located west of the City. These creek systems flow north into the Columbia River, located approximately 10 miles northeast of the City. It is not likely that either creek system would be able to partially or wholly

provide the quantity or quality of water required for the water system. Drawing water from the Columbia River would require a major investment in infrastructure to establish transmission mains over the 10-mile distance. For all of these reasons, development of surface water sources to provide for the City's public drinking water system were considered non-viable alternatives while groundwater sources are available. Similarly, developing a wastewater reuse system would also require a large per capita investment to design and construct the necessary infrastructure, while the amount of water to be gained from reuse would only equate to a small percentage of the overall system demands. It also was eliminated as a viable option for supplying the City's water system while groundwater is available.

6.2 CONSERVATION PROGRAM

Given the information provided in Section 6.1, it is clear the conservation of water resources is a critical issue for the City. The City has established goals with regard to water conservation to reduce the per capita use of such a valuable and limited resource. The WUE goal adopted by the City in 2012 with community input was to reduce consumption (consumer usage) by ten percent in ten years. This is higher than the conservation estimates used to calculate the future demand as described in Section 4, but was intentionally done so in order to challenge City customers to each try to reduce individual consumption by ten percent, knowing that not all will participate or subscribe to these efforts. A copy of the public meeting notice and meeting minutes for which the WUE goal was established in accordance with WAC 246-290-830 is included in Appendix D.

In accordance with WAC 246-290-810(4)(d)(i), the City is required to have a minimum of five water efficiency measures. The City of Davenport's WUE program consists of the following elements:

1. Conduct annual water loss inventories.
2. Provide information about water saving measures with customer bills.
3. Encourage the use of low flow shower heads and toilets.
4. Provide information regarding the WUE program with customer bills.
5. Institute tiered rates for customers to encourage conservation.
6. Provide information regarding landscaping that reduces water consumption.
7. Continue replacement program for aging and leaking distribution system.
8. Conduct leak detection activities throughout the distribution system.
9. Continue to require meters for all new connections and sources.

As part of the conservation program, the City has pledged to utilize the following evaluation measures:

1. Conduct community surveys regarding water conservation activities and public education ideas. This survey can be conducted electronically or on paper, and only requires the time of City staff to prepare the survey and compile the results. As such, no monetary amounts within the water system budget are required to complete this evaluation task as the duties fall within the tasks required by the City staff to complete.

2. Determine the City's most and least successful WUE program elements on a regular basis. This is completed during the annual or semi-annual meeting of City staff and elected official and requires no monetary amounts within the water system budget.

3. Conduct cost/benefit analysis of conservation measures for annual budget. The City Administrator prepares this information annually as part of the budget preparations. No monetary amounts within the water system budget are required to complete this evaluation task as this is considered part of the job of the City Administrator.

4. Survey customers to determine the number of low flow shower heads and toilets installed each year. This survey is completed alongside or in conjunction with the community survey to track other conservation activities and public education ideas. The City prepares and reviews the survey in the same manner and no money amounts within the water system budget are required for this task.

The City staff and elected officials meet once or twice a year to use the evaluation measures to gauge the effectiveness and progress towards the WUE goals. This team also determines whether or not the any changes in the in WUE program are necessary, and if so, hold public meetings to gather input and involve community members in the process. Customers are provided the WUE goal information though inserts included with monthly bills and in the CCR. Information is provided several times a year.

Because the three-year average of distribution system leakage is greater than ten percent, the City is required to develop, implement, and include a Water Loss Control Action Plan (WLCAP) with the WSP. The City has an informal WLCAP, but intends to formalize the plan once the WSP is completed. As part of the current WLCAP plan, the City conducts annual leak detection surveys and established the service meter program as described in Section 6.2.1. As documented in Section 5.3, the annual leak detection surveys have not identified any major sources of leaking. As such, the replacement, calibration, and repair operations as detailed in the Service Meter Program have become the primary emphasis of the WLCAP implementation efforts currently employed by the City.

6.2.1 Service Meter Program

The City of Davenport has taken an active role in metering every connection in town. Over the last few years the City has committed resources including funds for new equipment and man-hours of the public works crews to upgrade and install new remote reading devices and meters.

This program was instituted to improve the efficiency and accuracy of tracking consumption for the water system, to help identify potential sources of distribution system leaks, and to more accurately charge consumers for usage.

Individual meters with abnormal readings are flagged by meter readers, the public works crew, or City staff to be replaced immediately. Meters that are pulled from service are sent to a local vendor for recalibration and/or required maintenance. Repaired and recalibrated meters are reused when possible to save on equipment costs.

Outside of the flagged meters, the public works department will attempt to check, recalibrate, and/or replace service meters in small groups or neighborhoods. The oldest neighborhoods were targeted as the first candidates of the program, especially areas where the meters were 40 or more years old. The City has continued to work as time allows to service and/or replace meters and will continue to do so until all the remote read devices are installed within the City.

6.3 WATER LOSS CONTROL ACTION PLAN

In accordance with WAC 246-290-820(4), the City of Davenport has prepared a Water Loss Control Action Plan as a result of their three-year average distribution system leakage being between 20 and 29% (estimated 25.8%). The City is committed to identifying and eliminating sources for the distribution system leakage and has set a goal of achieving the standard of 10% distribution system leakage (3-year average) by 2018. The Water Loss Control Action Plan contains the following elements:

1. Control Methods to Achieve Compliance with Distribution System Leakage Standard (3yr. average below 10%)

    a. Annual leak detection surveys will be performed by private contractors hired by the City.

    b. The City will review any reported problem areas for visual evidence of leaks.

    c. The City maintains a 6-year Capital Improvement Plan for replacing old and/or questionable piping within the distribution system.

    d. The City has created and is working to implement an aggressive meter replacement program to install radio read meters.

2. Implementation Schedule

    a. Every year, the City selects a contractor from their Small Works Roster to perform a leak detection services for the distribution system, including evaluation of any hydrants, valves, or services where leak type noises are detected.

    b. The City inspects any reports of standing water or excessive water consumption within 24 hours and followed with a letter to the affected consumer(s).

c. Within 6 months of identifying any potential problem areas, the City will inspect and replace, if necessary, any pipe, valves, hydrants, or other appurtenances. The distribution water lines identified in the 6-year Capital Improvement Plan are prioritized by area, pipe size, and budget. Depending on the scope of work to be completed, the City will decide whether or not the repairs will be completed by the Public Works crew or if an outside contractor will be hired.

d. The City purchases radio read water meters to replace the older manually read meters. As the new radio read meters are added to the system, the City is transitioning to reading the meters monthly instead of quarterly which allows for any leaks or abnormal usage to be discovered sooner.

3. Budget/Funding for Control Methods

a. The Professional Services (534-0-41) line item within the City's Water Fund (401) budget is used for financing the annual leak detection surveys.

b. The Capital Expenditures- Meters (594-34-63-03) line item within the City's Capital Improvement Fund (409) has an annual budget between $50,000 and $75,000 depending on the cost and number of meters planned to be installed each year.

c. The Capital Expenditures- Water Lines (594-34-63-02) line item within the City's Capital Improvement Fund (409) has funds set aside for the repair and replacement of identified water lines.

4. Technical/Economic Concerns

a. The City employs staff technically able to perform necessary repairs and meter replacements. There are no economic concerns to funding the methods previously outlined to identify and repair any leaks within the water system. The City Council passed and implemented an annual 3% increase in water rates beginning in 2013, reviewing annually, and anticipated to continue through 2016.

5. Assessment of Data Accuracy and Data Collection

a. The City anticipates that as the remaining direct read meters are replaced by remote read meters, the amount of metered consumption will increase (assumes old meters grossly under-metered current uses) thereby changing the distribution system leakage percentage.

b. The City will have the source meters calibrated by a factory representative at least once every 5 years to ensure the production records are accurate.

c. The City will institute a new record keeping system for tracking water use for construction activities, firefighting activities including hydrant maintenance, and other city uses.

d. The City accounting/finance department will collaborate with the Public Works department to evaluate the current accounting practices with new metering reading protocols.

6. Plan for Implementing Field Activities

   a. The City inspects any reports of standing water or excessive water consumption within 24 hours.

   b. Within 6 months of identifying any potential problem areas, the City will inspect and replace, if necessary, any pipe, valves, hydrants, or other appurtenances.

   c. The City employs staff technically able to perform necessary repairs and meter replacements. The City also reserves the right to hire contractors from their approved Small Works Roster as resources (time and budget) allow.

   d. The Public Works crew is continually working to replace the old manually read meters with new remote read meters set by an aggressive replacement schedule. As the number of meters to be replaced decreases, the City will transition into a meter calibration program to ensure meters are accurate and properly maintained.

7.0 SOURCE WATER PROTECTION

The City established a wellhead protection program with the preparation of the 2006 SWSMP, as required by WAC 246-290-135. The Wellhead Protection Program is intended to make residents and businesses aware of the need to protect the City's groundwater supply against contamination due to illegal dumping of contaminants in septic systems, old wells, or on the ground. The Wellhead Protection Program identifies potential contaminants and what steps can be taken to reduce the risk to the water supply.

The City distributed letters of notification to all residents and businesses in March 2006 with water bills about the wellhead protection program. The letter was sent as a follow up to a detailed plan that included advertising for toxic waste disposal, an emergency plan of action to facilitate cleanup of spills, and an education program for those living and working within the City. A second letter was sent to businesses, residents, and emergency response agencies in June 2006 with the Consumer Confidence Survey.

An inventory of the water system and possible sources of contamination was completed with the creation of the Wellhead Protection Program. Zones of influence, defined as areas where certain types of development that may pose a hazard to the City's well and/or water supply are restricted, were established prior to the creation of the Wellhead Protection Program in November 2003 and after a susceptibility analysis was completed. Two businesses, Grain Growers Association and Western Farm Supply, were the only businesses identified as potential contamination sources within the City.

Updates to the City's wellhead protection program were last initiated in 2010, including updating the list of contaminant sources and mailing of notification letters to the owners/operators of the known potential sources of ground water contamination, emergency responders, and agencies with jurisdiction. Once the update process has been completed, the updated information will be included as an addendum to the adopted WSP.

DOH regulations require water systems to collect groundwater depth data. The City has invested in equipment that is allows the public works staff to measure and record the groundwater depth on a daily basis with the totalizing flow meter data and pump running times for each well.

8.0 OPERATION AND MAINTENANCE

Water purveyors for Community Group A public water systems are required by WAC 246-290-415 to have an O&M program that describes the water system management and personnel, operator certification, the comprehensive monitoring plan for all contaminants included in WAC 246-290-300, an emergency response program, a cross-connection control program, and maintenance of service reliability in accordance with WAC 246-290-420. The City's O&M program, which includes all these elements, is outlined in this section as well as City mandated documentation requirements to assist personnel in determining when O&M procedures were last completed.

8.1 SYSTEM PERSONNEL

Name	Certification/Title	Phone Number
Fred Bell	City Foreman Water Distribution Manager II Water Superintendent	Day (509)725-4055 Night (509)721-0069
Joel Anderson	Water Distribution Manager II City Maintenance Staff	Day (509)725-4055

8.2 RECOMMENDED MAINTENANCE SCHEDULE

Routine O&M Functions	Frequency
Read source meters	Daily
Read service meters	3 times per year
Read static pressure (Indicates reservoir level)	Daily
Check chlorine applicator	Daily
Exercise valves, hydrants	Annually
Visually inspect reservoir	Annually
Inspect reservoir float switches	Annually
Service well pumps	As needed

Switch/Valve/Controls Operation	Normal Setting/Readings
Pump control panel	
Hand/auto/off switch	Auto
Static pressure	
Well #6	Approximately 38 to 41 psi
Well #7	Approximately 30 to 33 psi
Water meter	
Well #6	1350 to 1450 gpm
Well #7	700 to 800 gpm

Material Supplies	Supplier	Phone Number
Chlorine (5.25% solution)		
Pipes, valves, meters, fittings		
	Ferguson Waterworks	(509) 534-6500
	Consolidated Supply	(509) 891-9911
	HD Fowler	(509) 568-8400

8.3 CITY MANAGEMENT AND PERSONNEL

The City of Davenport Public Works Department is charged with the operation and maintenance of the City's water system. The chain of command with respect to the responsibility of the operation and maintenance of the system is as follows:

Mayor and City Council

↓

City Administrator

↓

City Foreman/Water Superintendent

↓

City Maintenance and Operation Staff

The City Foreman is responsible for the general supervision of the water system, with the Maintenance Supervisor in charge of direct supervision of the field staff. The field staff, as directed by the Maintenance Supervisor, performs scheduled routine inspection, maintenance and operation of the water facilities, and performs required repairs to the water facilities as needed.

8.4 OPERATOR CERTIFICATION

In accordance with WAC 246-292, Waterworks Operator Certification, all public water systems with more than 100 services are required to have a certified operator. The City Foreman is currently certified as a Water Distribution Manager II to oversee the operation of the system (Fred Bell, Operator No. 003706). One maintenance staff worker is certified as a Water Distribution Manager II (Joel Anderson, Operator No. 010557).

The Waterworks Certification requires that all certified personnel renew their certificates annually and demonstrate their continued professional growth in the field by accumulating three related college credits of Continuing Education Credits (CEUs) every three years.

8.5 OPERATION AND MAINTENANCE PROCEDURES

Preventive maintenance enables the system to be run more cost effectively and reduces the likelihood of system failures. A routine schedule of maintenance events has been developed for the water system, which identifies the type of maintenance required and the frequency of the surveillance. All record keeping and reporting is in accordance with WAC 246-290-480.

8.5.1 Wells No. 6 and 7

These two well supplies are the prime sources of groundwater for the City's water system. Each well is equipped with a vertical turbine pump to extract groundwater.

8.5.1.1 Routine Well Operation

A detailed O&M Manual is located in each of the well stations. A copy is also kept in the City Maintenance Shop. It includes detailed start-up and shutdown procedures, as well as safety procedures.

Under normal operation conditions, the wells are set to operate automatically and sequentially based on a level sensor located in Tank 3.

8.5.1.2 Record Keeping for City Wells

Whenever a well is in operation, it is checked daily. The following information should be recorded:

- Run time in hours (Well 7)

- Gallons of water pumped
- If running, an usual condition is noted

The static water level should be recorded after the well has been shut off for a period longer than an hour. Levels, during pump operation should be checked on a weekly basis.

8.5.1.3 Preventative Maintenance for Pumps

The following preventive maintenance is performed as indicated:

- Pumps: The City's pumps are removed, inspected, and repaired when a malfunction is detected. The pumps should be monitored on a daily basis to ensure proper operation.
- Motors: Pump motors are only pulled for inspection when operational problems occur.
- Fan: Bearings are lifetime lubricated and do not require grease. Blades are cleaned when needed. Bearings and motors are inspected for excessive wear.
- Air Filter: Filters are inspected annually, cleaned and/or replaced as necessary.
- Coil: Coils are cleaned with a vacuum, and the drain pan is cleaned and checked to ensure that they drain freely.
- Exterior of Pumphouse: Buildings are inspected on a weekly basis and repainted when needed. Weeds are cut around grounds as necessary.

8.5.1.4 Water Storage Tanks

The City's Water Storage Tank sites are checked for intrusion and vandalism a minimum of once per month. The preventive maintenance and record keeping requirements for the tanks include an annual assessment of the following exterior conditions:

- Condition of exterior coatings
- Integrity of perimeter fence and gate, and necessary repairs
- Condition of vent screen, and necessary repairs
- Vegetation growth at base of tank or tank supports is removed within 10 ft of base or supports

Interior inspections include investigation and evaluation of tanks' interior structural conditions and interior coating on a 10-year cycle. Divers should accomplish interior inspections while the tank is in service, or if drained, during low system demand periods.

8.5.1.5 Reservoir Operations

The reservoirs are tied into the telemetry system for the City wells. The telemetry is set to maintain the tanks between 90 and 100 percent capacity during normal operation.

8.5.2 Distribution System

8.5.2.1 Record Drawings

A water system map has been compiled as part of this WSP. The base map was generated using AutoCAD Civil3D from previous water system maps created by Century West Engineering, in addition to noted improvements and corrections from the Public Works Department and Stantec Consulting Services Inc. (Stantec).

As improvements are made to the system, it is important to note these on an as-built copy of the water system map for easy reference during future WSP updates.

8.5.2.2 Mains and Hydrants

The City of Davenport's Fire and Public Works departments have developed an inspection program for the City's fire hydrants. The program incorporates both a visual and operational check of all the City's fire hydrants twice per year. The flushing that occurs as part of this program has the beneficial effect of preventing stagnation and water quality problems that are often responsible for taste and odor within a distribution system. Records of each hydrant flushing will be kept with the Fire Department and the Public Works Department.

The City should pay particular attention to dead end or infrequently used lines where water quality problems are most common. These lines should be flushed on a routine basis. Complaints of objectionable tastes, odors, or color problems in the water are investigated.

The following is a summary of the data that should be recorded and kept on file as part of the fire hydrant maintenance program:

- Hydrant number/location
- Date of flushing
- Length of time flushed
- Flow and pressure
- Visual observations such as good or poor flow, odor, color, etc.

- Condition of hydrant, including caps, chains, paint, operating valve, nozzles, packing, and drainage
- Any maintenance, repairs, or replacements made include greasing, caulking, tightening, or other corrections

8.5.2.3 Valves and Flow Meters

City water valves should be exercised at a minimum of once per year to reduce the potential for "valve freeze-up" due to corrosion. Valve lids should be painted blue and hydrant valve lids should be painted blue with a white stripe to facilitate identification.

Most service meters throughout the system are read three times per year, thus providing a record of the meter's operational condition.

8.5.3 Disinfection Procedures

8.5.3.1 Chemical Supply

The City provides water treatment by means of a liquid hypochlorite system. Liquid chlorine is added by dosing pumps located at both wells. Disinfection of new or contaminated lines is done in accordance with AWWA standard C651.

Before placing new or repaired water lines or appurtenance into service, a satisfactory certified laboratory disinfection report or approval is sent to DOH on samples collected from representative points in the treated system.

8.5.3.2 Water Facility Installation or Repair

Disinfection of new or contaminated lines is done in accordance with AWWA standard C651. Disinfection for water storage facilities is done in accordance with AWWA standard 2002. A Construction Completion Report Form (DOH 331-121) must be submitted to DOH within 60 dates after a project requiring DOH approval is completed and before the project is put into service.

8.6 SAFETY PROCEDURES

Many safety hazards exist for City personnel operating and maintaining the water system. These hazards may include:

- Working in confined spaces
- Working with AC pipe
- Working around pressurized mains and services

- Working in trenches and other excavations
- Working around mechanical equipment such as pumps and lifting cranes
- Working with chlorine and other disinfectants
- Working around electrical equipment
- Working with and around heavy equipment and machinery, such as backhoes, electric and hand tools
- Working in public travelways

Special safety procedures and state and federal regulations must be observed when working around these hazards. A partial list of procedures and regulations are provided below:

HAZARD	RELATED PROCEDURE/REGULATION
Open trenches	CFR 1926, Subpart P WAC 296-155 Subpart N
Vehicle traffic	Occupational Safety and Health Administration (OSHA)/ Washington Industrial Safety and Health Act (WISHA)
Confined spaces	WAC 296-63 Part M
Cutting AC pipe	WAC 296-62
Working around active watermains	OSHA/WISHA
Using power tools and equipment	OSHA/WISHA
Climbing water tanks	WAC 296-155
Handling chlorine	WAC 296-62-075 through 296-62-07515
Pressure testing watermains	OSHA/WISHA
Electrical and construction work	WAC 296-155-426 though 462

8.7 CUSTOMER COMPLAINT RESPONSE PROGRAM

The City Public Works Department currently responds to customer complaints on a highest priority, first response basis. Table 20 outlines the priority levels assigned by type of complaint.

Table 20: Priority Levels for Customer Complaints

Priority Level	Complaint	Response
Highest priority	Illness	Immediate dispatch
	Taste and/or odor	
	No water	
	Air in waterline	
High Priority	Low pressure	2-hour response
	Settled trenches, surfacing water, etc.	
Lowest priority	Damaged meter boxes and other non-essential facilities	As time permits

8.8 RECORD KEEPING AND REPORTING

City records are kept and filed for the following information:

- Water quality testing and monitoring
- Taste, odor, and other customer complaints
- Well production and other monitoring
- Routing maintenance and construction with bacteriological sampling results
- Inspection reports of service lines, meters, and backflow devices
- All maintenance

All recording and reporting required by WAC 246-290-480 is currently kept at City Hall.

8.9 EMERGENCY RESPONSE PLAN

All water supply systems are subject to damage and interruption from unusual, emergency events. The degree of damage and the capacity to respond to that damage determines the vulnerability of the system. The most effective means of responding to an emergency situation is through pre-planning. An Emergency Response Plan provides a summary of contact information and step-by-step guidelines that the system operator can use to troubleshoot and respond to various emergency situations. Emergency Response plans are required for all Group A water systems per WAC 246-290-420.

In the case of an emergency related to the water system, one or more of the following people should be notified:

Water System Management and Employees

Fred Bell, City Foreman	(509) 725-4055
Steve Goemmel, City Administrator	(509) 725-4352
Brad Sweet, Mayor	(509) 725-4352

Police and Fire (CALL FIRST FOR LIFE THREATENING EMERGENCIES)

Lincoln County Sherriff	911 (24 hour emergency)	or (509) 725-3501 for non-emergencies
Davenport Fire District #5	911 (24 hour emergency)	or (509) 725-3636 for non-emergencies
Lincoln Hospital	911 (24 hour emergency)	or (509) 725-7101 for non-emergencies

Regulatory Agencies

WA Department of Health	(877) 481-4901 (24-hour emergency)
Eastern Regional Office	(509) 329-2100
Russell Mau, Regional Engineer- Lincoln Co.	(509) 329-2116
Washington Emergency Management Division	(800) 258-5990 (24-hour emergency)
Lincoln County Emergency Services	(509) 725-3501
Lincoln County Environmental Health Dept.	(509) 725-2501
Lincoln County Public Works Dept.	(509) 725-7041
WA Department of Ecology Spill Response	(509) 329-3400
WSDOT Davenport Facility	(509) 725-4191

Utilities and Service Providers

Avista Utilities (Electricity, Natural Gas)	(800) 223-9165
Inland Power and Light	(509) 747-7151
Dickerson Pump (Pump service)	(509) 534-2671
Fogel Pump (Pump service)	(509) 244-0846
Spokane Pump (Pump service)	(509) 535-9771
Power City Electric (Electrician)	(509) 535-8500
Aztech Electric (Electrician)	(509) 536-6200
Inland Northwest Electric (Electrician)	(509) 928-4347
Utility Locate Service (Call Before You Dig #)	811 or (800) 424-5555

Other Local Contacts

Davenport Times (media)	(509) 725-0101
Davenport School District	(509) 725-1481
Burlington Northern Santa Fe RR	(509) 725-1121

8.9.1 Response for Power Failure

Various types of weather can cause loss of electrical power. Wind, lightning, freezing rain, snow storms, traffic accidents, or substation failure can all cause an interruption of electrical power to the wells and telemetry systems.

1. **Distribution System** - Low pressures will result as the tanks are drawn down.

   ACTIONS:

   - Notify customers of potential temporary water shortage and initiate water rationing measures.
   - If water outages are experienced, operate blowoffs and/or fire hydrants to remove air from lines where air/vac stations do not exist.

2. **Tank(s)** - Tank levels will continue to drop during duration of power outage.

   ACTIONS:

   - Monitor tank level(s).
   - Contact Avista to determine estimated duration of power outage.
   - If prolonged outage is expected, contact water customers and request water conservation as appropriate by radio, television, newspaper, or bulk mailing.

3. **Well Pump(s)** - Pumps cannot be operated without a power source (electricity or backup generator).

   ACTIONS:

   - Check for manual or automatic operations modes and reset switch.
   - Contact Avista to determine estimated duration of power outage.
   - If prolonged outage is expected, procure emergency power generator.

8.9.2 Response for Water Transmission Line Failure

The system is dependent upon transmission mains between the distribution system and the system sources.

1. **Distribution System** - In most cases, the break could be isolated and the water rerouted to provide water to most of the City.

   ACTIONS:

   - Turn off pumps. Isolate break and reroute water to and from tanks, if possible.
   - Notify affected customers. If the failure is significant or prolonged, the customers should be contacted to conserve water, or emergency water stations may need to be set up for residents that cannot be served during the repairs.
   - Notify the Fire Department of areas without flow or reduced flow due to the transmission break.
   - Check for other buried utilities.
   - Repair break by either City staff or contractor from small works roster.
   - Disinfect and flush line in accordance with WSDOT Standard Specifications and DOH regulations.
   - Check for chlorine residual.
   - Turn on water and bleed out air.

2. **Tank(s)**

   ACTIONS:

   - Monitor tank level(s).

3. **Well Pump(s)**

ACTIONS:

- Monitor manual/auto operation to provide water and system pressure.

8.9.3 Response for Well Pump Failure

Failure of a well pump can be due to either electrical or mechanical problems. It is critical that failure of a well pump be addressed immediately after detection, particularly during peak demand periods.

1. **Distribution System** - Low pressures will result as the tanks are drawn down if the remaining in-service well cannot meet system demands.

   ACTIONS:

   - Notify customers of potential temporary water shortage and initiate water rationing measures.
   - If water outages are experienced, operate blowoffs and/or fire hydrants to remove air from lines where air/vac stations do not exist.

2. **Tank(s)** - Tank levels may continue to drop until the well pump is repaired.

   ACTIONS:

   - Monitor tank level(s).
   - If critical well pump (Well 6) will be out of service for a prolonged period of time, contact water customers and request water conservation as appropriate by radio, television, newspaper, or bulk mailing.

3. **Well Pump(s)**

   ACTIONS:

   - Check for manual or automatic operation modes and reset switch.
   - Contact pump service to inspect and troubleshoot possible problems.
   - If prolonged outage is expected, procure emergency water source.

8.9.4 Response for Electrical Failure

Failure of an electrical system can be due to electrical shorts, power fluctuations, and defective parts.

1. **Distribution System** - Low pressures will result as the tanks draw down if the remaining well in service cannot meet system demands.

ACTIONS:

- Notify customers of potential temporary water shortage and initiate water rationing measures.
- If water outages are experienced, operate blowoffs and/or fire hydrants to remove air from lines where air/vac stations do not exist.

2. **Tank(s)** - Tank levels may continue to drop until the well pump is repaired.

ACTIONS:

- Monitor tank level(s).
- If critical well pump (Well 6) will be out of service for a prolonged period of time, contact water customers and request water conservation as appropriate by radio, television, newspaper, or bulk mailing.

3. **Well Pump(s)**

ACTIONS:

- Check for manual or automatic operation modes and reset switch.
- If prolonged outage is expected, procure emergency water source.

4. **Electrical Controls**

ACTIONS:

- Verify that loss of power is not cause of malfunction.
- Contact electrician to inspect and troubleshoot possible problems with the control panel.
- If prolonged outage is expected, procure emergency water source.

8.9.5 Response to Contamination of Water Supply

Contamination of the water supply can occur from situations like water main breaks or cross contamination. Contamination presents a significant health hazard when by testing the level of contaminants exceeds an MCL or as advised by the DOH Engineer. An example of contamination that does not present a significant health hazard would be the presence of odor in the drinking water for which testing results show no MCLs are exceeded.

1. **Distribution System**

ACTIONS WHEN CONTAMINATION PRESENTS SIGNIFICANT HEALTH HAZARD:

- Notify DOH Engineer. Declare water system unsuitable for domestic consumption.
- Notify all customers of emergency by radio, television, or police loudspeaker.
- Turn off wells.
- Remove water from system by opening hydrants.
- Locate and isolate source of contamination.
- Repair and/or remove source of contamination.
- Flush and disinfect all contaminated lines.

ACTIONS when contamination DOES NOT present a significant health hazard:

- Locate and isolate source of contamination.
- Repair and/or remove source of contamination.
- Flush and disinfect all contaminated lines.

2. **Tank(s)**

ACTIONS WHEN CONTAMINATION PRESENTS SIGNIFICANT HEALTH HAZARD:

- Notify the Fire Department.
- Drain and disinfect the tank(s).
- Turn well on manual if determined to be safe and as needed.

ACTIONS when contamination DOES NOT present a significant health hazard:

- Chlorinate to achieve a free chlorine residual, varying from 1 to 2 parts per million (ppm).

3. **Well Pump(s)**

ACTIONS WHEN CONTAMINATION PRESENTS SIGNIFICANT HEALTH HAZARD:

- Identify source of contamination by testing.

ACTIONS when contamination DOES NOT present a significant health hazard:

- Chlorinate to achieve a free chlorine residual, varying from 1 to 2 ppm.

8.9.6 Response to Contamination of Water Source (and Supply)

Contamination of the water source can occur from accidental spillage of contaminants near the well site, in the aquifer, from sabotage, or from other sources. The City may be notified by another agency or may discover the problem through routine sampling. If contamination presents a significant health hazard risk, follow steps outlined in 8.9.5.

1. **Distribution System**

   ACTIONS:

   - Perform chemical and bacteriological analyses at various locations within the system.
   - Disinfect distribution lines as dictated by the nature of the contamination.

2. **Tank(s)**

   ACTIONS:

   - Drain and disinfect tanks as dictated by the nature of the contamination.
   - Perform chemical and bacteriological analyses as necessary.

3. **Well Pump(s)**

   ACTIONS:

   - Do not use affected well until problem is resolved.
   - Emergency water stations should be set up if disinfection is expected to last a prolonged amount of time.
   - Perform chemical and bacteriological analyses as necessary.

8.10 CROSS CONNECTION CONTROL

A cross connection, as defined by WAC 246-290-010, is any actual or potential physical connection between a public water system or the consumer's water system and any source of nonpotable liquid, solid, or gas that could contaminate the potable water supply by backflow. As stipulated by WAC 246-290-490, it is the City of Davenport's responsibility as a public water system purveyor to prevent cross connections by establishing a Cross Connection Control (CCC) program. The City of Davenport's Municipal Code, Chapter 13.05, Unlawful Cross-Connections, outlines the City's rules and regulations pertaining to CCC. A copy of Chapter 13.05 of the Davenport Municipal Code is included in Appendix D.

The City of Davenport initiated a CCC program in 2005 by procuring the services of a Certified CCC Specialist to conduct an initial survey of the City's water system. The City Foreman oversees

and manages the CCC program. In 2006, the City passed Resolution No. 2006-2, the Cross Connection Control Policy, which established the City's service policies with regards to the CCC program. The original CCC program documentation is included in Appendix K, including Resolution No. 2006-2. No changes have been made to the original CCC program since it was passed as a resolution in 2006.

8.10.1 Cross Connection Control Program Elements

The following are required minimum elements necessary for development of a CCC program:

Element 1: The purveyor shall adopt a local ordinance, resolution, code, bylaw, or other written legal instrument that:

i. Establishes the purveyor's legal authority to implement a CCC program,

ii. Describes the operating policies and technical provisions of the purveyor's CCC program, and

iii. Describes the corrective actions used to ensure that consumers comply with the purveyor's CCC requirements.

Davenport Municipal Code Chapter 13.05 provides the City with legal authority to cease delivery of water to properties if a cross-connection is discovered and allows for periodic CCC inspections.

Element 2: The purveyor shall develop and implement procedures and schedules for evaluating new and existing service connections to assess the degree of hazard posed by the consumer's premises to the purveyor's distribution system and notifying the consumer within a reasonable time frame of the hazard evaluation results. At a minimum the program shall meet the following:

i. For connections made on or after April 9, 1999, procedures shall ensure than an initial evaluation is conducted before water service is provided;

ii. For all other connections, procedures shall ensure that an initial evaluation is conducted in accordance with a schedule acceptable to the department and;

iii. For all service connections, once an initial evaluation has been conducted, procedures shall ensure that periodic reevaluations are conducted in accordance with a schedule acceptable to the department and whenever there is a change in the use of the premises.

An initial survey of the water system was completed in 2005. Commercial sites are inspected on an annual basis in conjunction with Critical Material Inspections, including checking device locations and any new process or water use. Backflow prevention devices for individual irrigation systems are required to be tested annually.

The City periodically reevaluates potential hazards and ensures that new system users are adhering to the CCC program.

Element 3: The purveyor shall develop and implement procedures and schedules for ensuring that:

i. Cross-connections are eliminated whenever possible;

ii. When cross-connections cannot be eliminated, they are controlled by installation of approved backflow preventers commensurate with the degree of hazard; and

iii. Approved backflow preventers are installed in accordance with the requirements of subsection (6) of this section.

Standard operating procedures for the City of Davenport's CCC Program were developed in 2005 and can be found in Appendix K.

Element 4: The purveyor shall ensure that personnel, including at least one person certified as a CCC Specialist, develop and implement the CCC program.

The City of Davenport's CCC program was developed by a Certified CCC Specialist consultant and is enforced by City Staff, two of whom are also CCC certified.

Element 5: The purveyor shall develop and implement procedures to ensure that approved backflow preventers relied upon to protect the public water system are inspected and/or tested as applicable under subsection (7) of WAC 246-290-490 (7).

A table listing the frequency of hazard reevaluation for each type of service was established in the original CCC program documentation included in Appendix K.

Element 6: The purveyor shall develop and implement a backflow preventing assembly testing quality control program.

QC for backflow preventing assembly testing included in the original CCC program is detailed in Appendix K.

Element 7: The purveyor shall develop and implement procedures for responding to backflow incidents.

A Backflow Incident Response Plan was included in the original CCC program included in Appendix K.

Element 8: The purveyor shall include information on CCC in the purveyor's existing program for educating consumers about water system operation. The public education program may include periodic bill inserts, public service announcements, pamphlet distribution, notification of new consumers, and consumer confidence reports.

Customer education for the CCC program was established in 2005 and is included in Appendix K.

Element 9: The purveyor shall develop and maintain CCC records including, but not limited to, the following:

i. A master list of service connections and/or consumer's premises where the purveyor relies upon approved backflow preventers to protect the public water system from contamination, the assessed hazard level of each, and the required backflow preventer(s);

ii. Inventory information on backflow preventers that protect the public water system including:

   1. Approved air gaps installed in lieu of approved assemblies including exact air gap location, assessed degree of hazard, installation date, history of inspections, inspection results, and person conducting inspection

   2. Approved backflow assemblies including exact assembly locations, assembly description (type, manufacturer, model, size, and serial number), assessed degree of hazard, installation date, history of inspections, tests and repairs, test results, and person performing tests; and

   3. Approved vacuum breaker air valve assemblies used for irrigation system applications including location, description (manufacturer, model, and size), installation date, history of inspection(s), and person performing inspection(s).

iii. Cross-connection program summary reports and backflow incident reports required under subsection (8) of this section.

All records of inspections, correspondence with DOH and system users, and annual reports are maintained at City Hall. The City utilizes TOKAY software, which provides a database for tracking backflow devices used by water systems. It is utilized to maintain records, generate notices for annual inspections, prepare annual CCC program summary reports, and generate Backflow Incident Reports, as necessary.

Element 10: Purveyors who distribute and/or have facilities that receive reclaimed water within their water service area shall meet any additional CCC requirements imposed by the department issued under Chapter 90.46 Revised Code of Washington (RCW).

N/A (No reclaimed water facilities or use have been established within the City of Davenport's service area)

9.0 CAPITAL IMPROVEMENT PROGRAM

This section contains the recommended Capital Improvement Program (CIP) for the City's water system. The CIP was developed based on the findings and conclusions provided in Section 5, System Analysis. Table 21 includes rough estimated costs and is subject to change according to price fluctuation in equipment and materials. They are given as a conceptual estimate to be used when seeking funding to assist in paying for the needed improvements. Additionally, the estimated time for completion is provided.

Table 21: Capital Improvement Program- Distribution Upgrades and Improvements

No.	Improvement Description	Estimated Cost*	Year Planned
1	Morgan: 1st to Maxwell to 3rd loop, Upgrade main	$75,000	2016
2	Water Source and Storage Study and Construction	$2,500,000	2016
3	Leak Detection Service	$18,000	2016
4	Remote Read Meters Purchased/Installed	$5,000	2016
5	14th St: Between Morgan and Merriam, New 8"	$105,000	2017
6	Merriam: At 7th St, fix dead ends and retaining wall cover	$76,000	2017
7	7th St: Between Maxwell and Washington, new 8"	$45,000	2017
8	3th St: Between Merriam and Washington, 6" to 8"	$60,000	2018
9	7th St: Between Merriam and Marshall, new 8"	$100,000	2018
10	8th St: Between Monroe and Jefferson, new 1 O"	$51,750	2018
11	3rd St: Between Washington and Adams, new 8"	$96,000	2019
12	11th St: Between Ross and Sinclair, new 6"	$50,000	2019
13	11th St: Between Morgan and Jefferson, new 8"	$63,000	2019
14	5th St: Between Ross and Sinclair, new 8"	$42,000	2020
15	7th St: Between Sinclair and Logan, New 8"	$65,000	2020
16	Mcinnis Rd: 1 O" loop around sports complex	$135,000	2021
17	9th St: Between Jefferson and Tank #3, replace 1 O"	$75,000	2021
*Estimated cost includes design, construction, contingency, and construction administration based on 2013 unit costs			

Table 21 summarizes the Capital Improvement Program items based on the recommendations provided in Section 5. The first three items, indicated with bold font, constitute the projects included in the 6-year CIP schedule.

The estimated dates of completion as provided in Table 21 are subject to change depending on available funding including from the City and local, state, and federal grant and loan programs.

10.0 FINANCIAL ASSESSMENT

As required by WAC 246-290-100, a water system must demonstrate financial viability by providing a summary of past incomes and expenses, a 6-year balanced budget, a plan for collecting the revenue necessary to maintain cash flow stability and to fund capital and emergency improvements, and finally a rate structure evaluation that considers the affordability of water rates and the feasibility of implementing a rate structure that encourages water demand efficiency.

10.1 CURRENT WATER SYSTEM RATES

The following rate information is current for the City of Davenport's water system as of September 2013:

10.1.1 Water Use Rates – Monthly

INSIDE: Basic Charge	$32.24	1st 1,000 cf
1,001 - 5,000 cf	$0.46	per 100 cf
5,001 - 10,000 cf	$0.82	per 100 cf
10,000 + cf	$1.13	per 100 cf
OUTSIDE: Basic Charge	$37.39	1st 500 cf
501 - 5,000 cf	$0.51	per 100 cf
5,001 - 10,000 cf	$0.87	per 100 cf
10,000 + cf	$1.18	per 100 cf
B&O Tax	18%	On each account
Delinquent Interest	12%	Over 30 days

Inside basic charges are for residential, commercial, and industrial customers located inside the incorporated City boundaries. Outside basic charges are for residential, commercial, and industrial customers located outside the incorporated City boundaries.

10.1.2 Cross Connection

CCC Non-Compliance	$500.00	Fine + potential jail time

10.1.3 Service Charges

CONNECTION CHARGES	
Application Fee	$5.00

Airport Hangar	$800.00	

SERVICE CONNECTIONS

1.0 inch	$3,200.00	(Meter included)
1.5 inch	$3,400.00	(Meter included)
2.0 inch	$3,700.00	(Plus meter)
3.0 inch	$4,000.00	(Plus meter)
4.0 inch	$4,500.00	(Plus meter)
6.0 inch	$5,000.00	(Plus meter)
Repair of Street Pavement	$100.00	
Meter Check	$7.00	Low or high reading
Hydrant (Stem) Use Fee	$30.00	1 to 5,000 gallon plus B&O tax of 18%
Hydrant (Stem) Use Fee	$50.00	Over 5,000 gallons plus B&O tax of 18%
Unauthorized Hydrant Use	$251.00	
Turn Service On/Off	$35.00	
Non Compliance	$50.00	Non-payment turn-off
Penalty for Turn On	$100.00	Turn-on without permission

10.2 SUMMARY OF PAST INCOME AND EXPENSES

Table 22 provides a breakdown of the revenues for the water system as tracked by the City of Davenport, including the appropriated and actual amounts for 2014 and 2015.

Table 22: Water System Revenues

Budget Item	2014		2015	
	Appropriated	Actual	Appropriated	Actual
BEGINNING BALANCE	**$85,000.00**	**$88,255.00**	**$75,000.00**	**$90,066.00**
STATE REVENUE (DOH WELL STUDY GRANT)	**$0.00**	**$0.00**	**$25,000.00**	**$25,000.00**
Water Fees	$380,000.00	$406,318.81	$390,000.00	$417,341.79
Other Fees and Charges	$500.00	$0.00	$500.00	$0.00
Water Connection Fees	$0.00	$0.00	$0.00	$924.23
CHARGES FOR SERVICES	**$380,500.00**	**$406,318.81**	**$390,500.00**	**$418.266.02**
Water Turn on Penalty	$500.00	$300.00	$500.00	$300.00
Misc. Fines and Penalties	$100.00	$2,844.71	$100.00	$1,820.43

Budget Item	2014		2015	
	Appropriated	Actual	Appropriated	Actual
NSF Charges	$50.00	$128.81	$50.00	$131.28
FINES AND FORFEITURES	**$650.00**	**$3,273.52**	**$650.00**	**$2,251.71**
Investment on Interest	$250.00	$208.30	$150.00	$158.56
Sale of Scrap Metal	$1500.00	$746.30	$1,500.00	$0.00
Misc.	$0.00	$0.00	$0.00	$0.00
MISC. REVENUES	**$1750.00**	**$854.60**	**$1,650.00**	**$158.56**
Other Non-Revenues	$0.00	$0.00	$0.00	$0.00
SUBTOTAL REVENUES	**$382,900.00**	**$479,008.63**	**$392,800.00**	**$420,676.29**
TOTAL REVENUES + BEGINNING BALANCE + STATE REVENUE	**$467,900.00**	**$498,701.76**	**$492,800.00**	**$535,741.99**

Table 23 provides a breakdown of expenditures for the water system as tracked by the City of Davenport, including the appropriated and actual amounts for 2014 and 2015. Testing, operator training, operating certification fees, sanitary survey fees, and implementing of the WUE program expenses are all included within the Miscellaneous line item for general administrative expenses.

Table 23: Water System Expenditures

Budget Item	2014		2015	
	Appropriated	Actual	Appropriated	Actual
DOH WELL STUDY GRANT	**$0.00**	**$0.00**	**$25,000.00**	**$27,365.61.00**
Office Salaries	$70,250.00	$70,189.82	$72,500.00	$73,090.87
Office Benefits	$21,500.00	$20,666.75	$22,500.00	$22,186.12
Office and Operating Supplies	$27,500.00	$24,036.45	$20,000.00	$19,926.88
Professional Services	$10,300.00	$12,313.26	$7,000.00	$5,992.75
Communication	$2,000.00	$3,647.84	$2,000.00	$2,429.84
Advertising	$0.00	$0.00	$0.00	$0.00
Miscellaneous	$25,000.00	$29,892.74	$27,000.00	$55,339.53
Department of Corrections Crew	$0.00	$0.00	$0.00	$0.00
Office Utility Services	$37,000.00	$37,897.94	$37,000.00	$43,601.22

Budget Item	2014		2015	
	Appropriated	Actual	Appropriated	Actual
ADMINISTRATION - GENERAL	**$193,550.00**	**$198,644.80**	**$188,000.00**	**$222,567.21**
Repair and Maintenance	$10,000.00	$144.59	$10,000.00	$678.19
Cross Connection Control Contract.	$0.00	$0.00	$0.00	$0.00
MAINTENANCE	**$10,000.00**	**$144.59**	**$10,000.00**	**$678.19**
Water Operations Salaries	$88,250.00	$84,147.01	$90,500.00	$84,236.58
Water Operations Benefits	$31,250.00	$27,174.96	$31,250.00	$27,956.81
Fuel Supplies	$2,000.00	$2,938.66	$2,000.00	$1,792.79
Small Tools	$2,500.00	$1,105.34	$2,500.00	$0.00
Travel	$500.00	$629.16	$500.00	$0.00
Water Equipment Rental Charges	$500.00	$184.18	$500.00	$0.00
Insurance	$18,000.00	$18,667.36	$15,000.00	$14,458.84
OPERATIONS - GENERAL	**$143,000.00**	**$134,846.67**	**$142,250.00**	**$128,445.02**
CAPITAL EXPENDITURES	**$1,500.00**	**$0.00**	**$5,000.00**	**$4,045.20**
TRANSFER TO WATER CIP	**$75,000.00**	**$75,000.00**	**$75,000.00**	**$75,000.00**
TOTAL EXPENDITURES	**$423,050.00**	**$408,636.06**	**$445,250.00**	**$430,735.62**

Table 24 provides a breakdown of the Water Capital Improvement Fund as tracked by the City of Davenport, including the appropriated and actual amounts for 2014 and 2015. The Water Capital Improvement fund maintains funds enough to provide for emergency repairs, planned line replacement/repairs and for the meter replacement program. The target amount for this fund is $300,000 per year. This fund is supplied by interfund transfers generated by the surplus of the annual water system revenues and by surplus amounts in the water fund carried over from year to year.

Table 24: Water Capital Improvement Fund

Budget Item	2014		2015	
	Appropriated	Actual	Appropriated	Actual
Beginning Balance	$215,000.00	$213,498.38	$210,000.00	$215,335.25
Investment Interest	$500.00	$202.91	$250.00	$375.30
Interfund Transfers	$75,000.00	$75,000.00	$75,000.00	$75,000.00

Budget Item	2014		2015	
	Appropriated	Actual	Appropriated	Actual
CIP REVENUES	**$290,500.00**	**$288,701.29**	**$285,250.00**	**$290,710.55**
Capital Improvement Projects	$100,000.00	$11,836.99	$100,000.00	$7,631.76
Water Line Specific Capital Improvements	$120,000.00	$41,693.65	$100,000.00	$0.00
Service Meter Program Capital Improvements	$50,000.00	$19,815.40	$25,000.00	$5,973.64
CIP EXPENDITURES	**$270,000.00**	**$73,346.04**	**$225,000.00**	**$13,605.40**
REMAINING BALANCE	**$20,500.00**	**$215,355.25**	**$60,250.00**	**$277,105.15**

Table 25 provides a summary of the income and expenses related to operating the water system for the last 6 years. Operating revenues include the surplus amount from the previous year's budget carried over.

Table 25: Summary of Past Income and Expenses

Budget Item	2010	2011	2012	2013	2014	2015
1. **Operating Revenue** (water rates, fees and services, impact fees, other revenue)	$285,000	$479,009	$461,885	$461,326	$498,702	$535,742
2. **System Operating Expenses** (salaries, benefits, contract labor, power costs, equipment, chemical costs, monitoring costs, insurance, professional service fees)	($267,664)	($415,579)	($386,686)	($373,071)	($408,636)	($430,736)
3. Taxes	N/A	N/A	N/A	N/A	N/A	N/A
4. **Debt Payments**	N/A	N/A	N/A	N/A	N/A	N/A
5. Miscellaneous	N/A	N/A	N/A	N/A	N/A	N/A
6. **Budget Surplus (A – E)**	$17,336	$63,430	$75,199	$88,255	$90,066	$105,006
7. **Capital Improvement Costs**	-	($158,753)	($24,440)	-	-	($27,366)
8. **Financing Sources** Grants, Reserves, Loans, and User Surcharges	-	Reserves, user charges	Reserves, user charges	-	-	Reserves, user, grants

10.3 PROPOSED 6-YEAR OPERATING BUDGET

The City of Davenport has estimated the water system revenues (Table 26) and expenditures (Table 27) to prepared the Proposed 6-Year Operating Budget as outlined in Table 28. The revenue projects were based on the monthly charges for 772 billed service connections throughout the 6-year period.

Table 26: Proposed Water System Revenues

Budget Item	2016	2017	2018	2019	2020	2021
Water Fees	$ 400,064	$411,281	$424,081	$437,280	$450,888	$468,035
Water Connection Fees	$ 0.00	$ 3,200	$ 3,200	$ 3,200	$ 3,200	$ 22,400
Other Fees and Charges	$ 500	$ 500	$ 500	$ 500	$ 500	$ 515
CHARGES FOR SERVICES	**$ 400,564**	**$411,281**	**$424,081**	**$437,280**	**$450,888**	**$468,035**
Water Turn on Penalty	$ 500	$ 500	$ 500	$ 500	$ 500	$ 515
Misc. Fines and Penalties	$ 100	$ 100	$ 100	$ 100	$ 100	$ 103
NSF Charges	$ 50	$ 100	$ 100	$ 100	$ 100	$ 103
FINES AND FORFEITURES	**$ 650**	**$ 700**	**$ 700**	**$ 700**	**$ 700**	**$ 721**
Investment on Interest	$ 150	$ 240	$ 250	$ 240	$ 250	$ 258
Sale of Scrap Metal	$ 1,500	$ 1,500	$ 1,500	$ 1,500	$ 1,500	$ 1,545
Misc.	$ -0.00	$ 0.00	$ 0.00	$ 0.00	$ 0.00	$ 0.00
MISC. REVENUES	**$ 1,650**	**$ 1,740**	**$ 1,750**	**$ 1,740**	**$ 1,750**	**$ 1,803**
Other Non-Revenues	$ 0.00	$ 0.00	$ 0.00	$ 0.00	$ 0.00	$ 0.00
TOTAL REVENUES	**$ 402,864**	**$417,421**	**$430,231**	**$443,420**	**$457,038**	**$493,473**

Table 27: Proposed Water System Expenditures

Budget Item	2016	2017	2018	2019	2020	2021
Office Salaries	$72,500	$74,000	$76,000	$77,000	$78,000	$79,500
Office Benefits	$22,500	$23,500	$24,500	$25,000	$26,000	$26,750
Office and Operating Supplies	$20,000	$25,000	$25,000	$25,000	$25,000	$25,000
Professional Services	$7,000	$5,000	$5,000	$5,000	$5,000	$5,000
Communication	$2,000	$2,350	$2,400	$2,350	$2,400	$2,400
Advertising	$0.00	$0.00	$0.00	$0.00	$0.00	$0.00
Miscellaneous	$27,000	$27,500	$28,000	$27,500	$28,000	$28,000

Budget Item	2016	2017	2018	2019	2020	2021
Department of Corrections Crew	$0.00	$0.00	$0.00	$0.00	$0.00	$0.00
Office Utility Services	$37,000	$40,000	$41,000	$40,000	$41,000	$41,000
ADMINISTRATION - GENERAL	**$188,000**	**$197,350**	**$201,900**	**$201,850**	**$205,400**	**$207,650**
Repair and Maintenance	$10,000	$5,000	$5,000	$5,000	$5,000	$5,000
CCC Contract	$0.00	$0.00	$0.00	$0.00	$0.00	$0.00
MAINTENANCE	**$10,000**	**$5,000**	**$5,000**	**$5,000**	**$5,000**	**$5,000**
Water Operations Salaries	$90,500	$92,000	$94,000	$92,000	$94,000	$94,000
Water Operations Benefits	$31,250	$32,500	$33,500	$32,500	$33,500	$33,500
Fuel Supplies	$2,000	$2,000	$2,100	$2,000	$2,100	$2,100
Small Tools	$2,500	$1,500	$1,500	$1,500	$1,500	$1,500
Travel	$500	$500	$500	$500	$500	$500
Water Equipment Rental Charges	$500	$250	$250	$250	$250	$250
Insurance	$15,800	$16,000	$16,500	$17,000	$17,500	$18,000
OPERATIONS - GENERAL	**$143,050**	**$144,750**	**$148,350**	**$145,750**	**$149,350**	**$149,850**
CAPITAL EXPENDITURES	**$2,500**	**$2,500**	**$2,500**	**$2,500**	**$2,500**	**$2,500**
TRANSFER TO WATER CIP	**$75,000**	**$75,000**	**$75,000**	**$75,000**	**$75,000**	**$75,000**
TOTAL EXPENDITURES	**$418,550**	**$424,600**	**$432,750**	**$430,100**	**$437,250**	**$440,000**

Table 28 below includes the proposed 6-year operating budget for the City's water system.

Table 28: Proposed 6-Year Operating Budget

Budget Item	2016	2017	2018	2019	2020	2021
1. **Operating Revenue** * (water rates, fees and services, impact fees, other revenue)	$477,864	$492,421	$505,231	$518,420	$532,038	$568,473
2. **System Operating Expenses** (salaries, benefits, contract labor, power costs, equipment, chemical costs, monitoring costs, insurance, professional service fees)	$418,550	$424,600	$432,750	$430,100	$437,250	$440,000

3. Taxes	N/A	N/A	N/A	N/A	N/A	N/A
4. Debt Payments	N/A	N/A	N/A	N/A	N/A	N/A
5. Miscellaneous	N/A	N/A	N/A	N/A	N/A	N/A
6. **Budget Surplus (A – E)**	$59,314	$67,821	$72,481	$88,320	$94,788	$128,473
7. **Capital Improvement Costs**	$2,598,000	$226,000	$211,750	$209,000	$107,000	$210,000
8. **Financing Sources** Grants, Reserves, Loans, and User Surcharge	Reserve, user charges grants	Reserve, user charges	Reserve, user charges	Reserve, user charges	Reserve, user charges	Reserve, user charges
*Line Item A includes Proposed Annual Total Revenues and any surplus amount from previous years budget						

As shown in Table 28, the planned revenue amounts exceed the expenditures annually, which allow the City to operate its water system self-sufficiently. The City uses the collected water fees to fund daily expenditures and future expansion and repairs of the system. These fees were set by the City at a rate to provide enough funding to operate annually with a balanced budget. In 2013 Council began a plan to increase water rates by 3% each year for three years, and this plan was completed in 2015. The City Council also instituted a rate schedule that encourages conservation by charging more per cubic foot with increased usage. These tiered rates have increased with the basic rate schedules as well.

The proposed CIP projects in Table 21 for the distribution and system improvements were developed so that the scope of work and associated costs would fit into the projected capital improvement budget. The proposed CIP projects were divided so they could be paid for with the general and/or water line capital improvement budget amounts. The estimated completion schedules for the proposed CIP projects were developed so that projects that are within the projected annual capital improvement budget could be completed on a yearly or every-other-year basis. Only one project was proposed with a cost over an annual budgeted amount of $300,000, this project is the water sources and storage study, and construction scheduled for 2016and this will require SWRF Grant Funding..

APPENDICES

Appendix A EXHIBITS

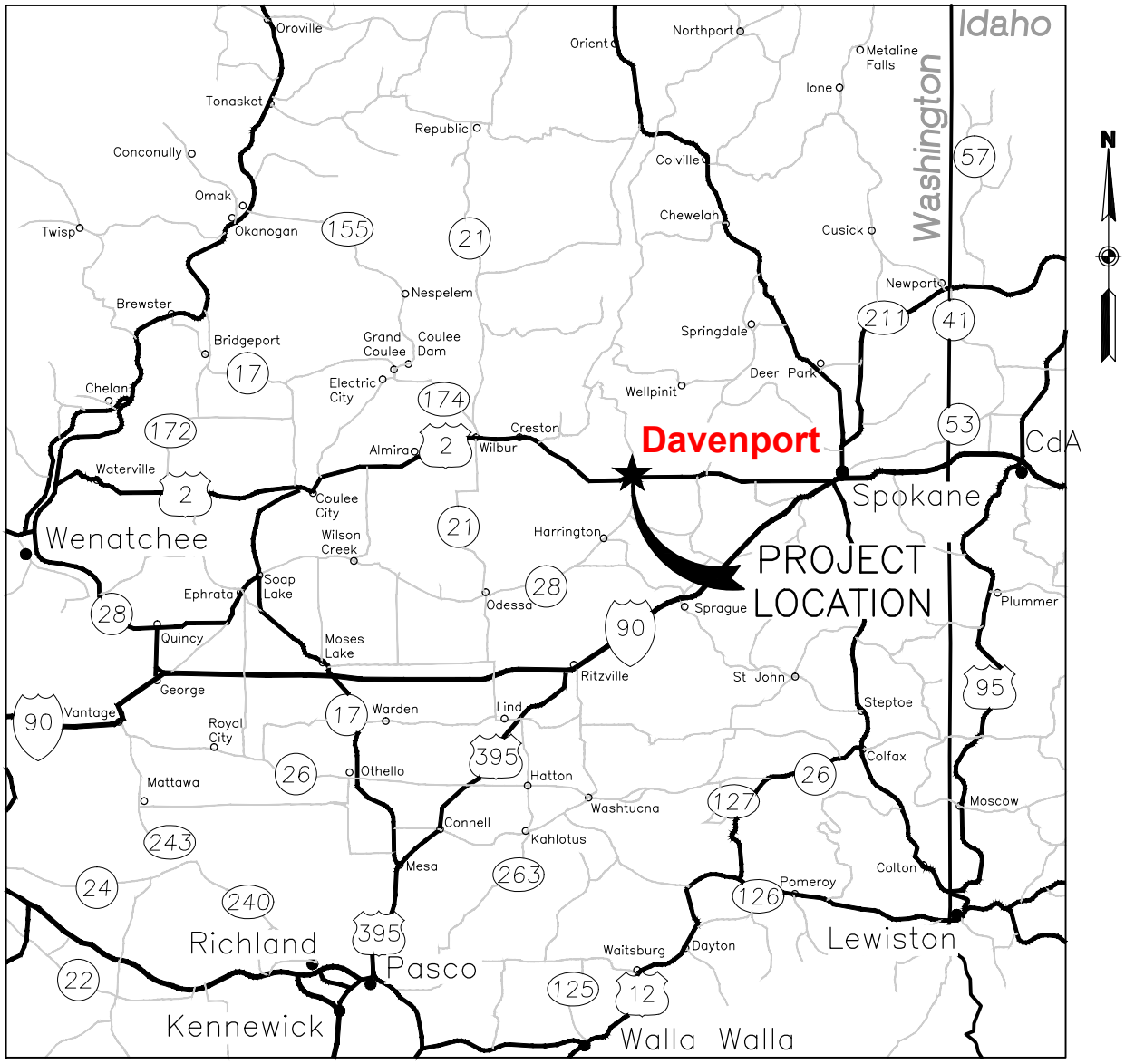

U:\2047052800\DRAWING\C\SHEETS\1289800-EX1.DWG
5/10/2016 11:16 AM

ORIGINAL SHEET - ANSI A

May, 2016
2047052800

Stantec

621 West Mallon Avenue, Suite 309
Spokane WA
www.stantec.com

Client/Project
City of Davenport
Davenport
Water System Plan

Figure No.
EX1

Title
VICINITY MAP

Storage Tank Information

Tank No. 1

Maximum Storage Capacity:	50,000 gallons (6,685 cf)
Type:	Elevated, Circular Steel Tank
Dimensions:	20 ft diameter x 23 ft tall (tank only)
Ground Elevation:	2427 ft MSL

Tank No. 2

Maximum Storage Capacity:	150,000 gallons (20,054 cf)
Type:	Elevated, Circular Steel Tank
Dimensions:	38 ft diameter x 20 ft tall (tank only)
Ground Elevation:	2427 ft MSL

Tank No. 3

Maximum Storage Capacity:	500,000 gallons (66,845 cf)
Type:	Ground-level, Circular Steel Tank
Dimensions:	48 ft diameter x 45 ft tall
Ground Elevation:	2475 ft MSL

Municipal Well Information

Well No.	Location	Depth	Year Installed	Year Abandoned
2	11st Street & Washington Street	503	1914	N/A
3	NE ¼, NE ¼, Sect. 21, T25N, R37E *(Not shown on map)*	722	1948	1995
4	5 miles north of Hwy 2 & Hwy 25 *(Not shown on map)*	302	1960	1999
5	900 Jefferson Street *(Not shown on map)*	501	1962	1999
6	11th Street & Jefferson Street	975	1975	N/A
7	Ross Street & Nichols Street	845	1995	N/A

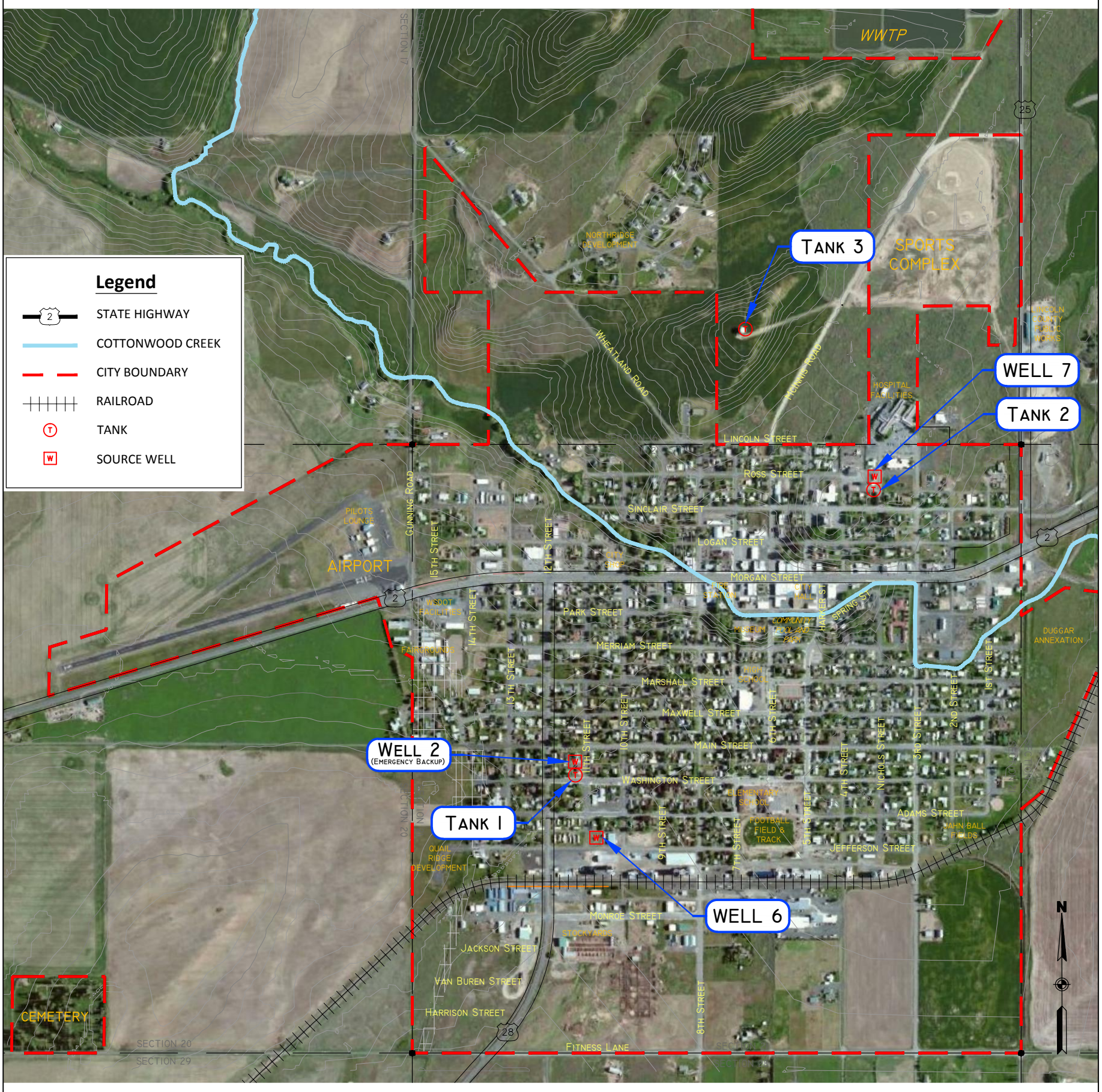

U:\2047052800\drawing\C\sheets\1289800-EX2.dwg
2016/05/10 11:19 AM By: Wahlquist, Ryan

ORIGINAL SHEET - ANSI B

2047052800
MAY, 2016

Stantec

621 West Mallon Avenue, Suite 309
Spokane WA
www.stantec.com

Client/Project
City of Davenport
Davenport
Water System Plan

Figure No.
EX2

Title
Topographic Map

Legend

- 2-INCH (OR LESS) WATERMAIN
- 4-INCH WATERMAIN
- 6-INCH WATERMAIN
- 8-INCH WATERMAIN
- 10-INCH WATERMAIN
- 12-INCH WATERMAIN
- FIRE HYDRANT
- CITY BOUNDARY
- EXISTING SERVICE AREA

Pipe Inventory- By Size	
2-inch or less	4,197 LF
4-inch	7,752 LF
6-inch	48,241 LF
8-inch	15,050 LF
10-inch	11,903 LF
12-inch	936 LF
TOTAL	**88,079 LF**

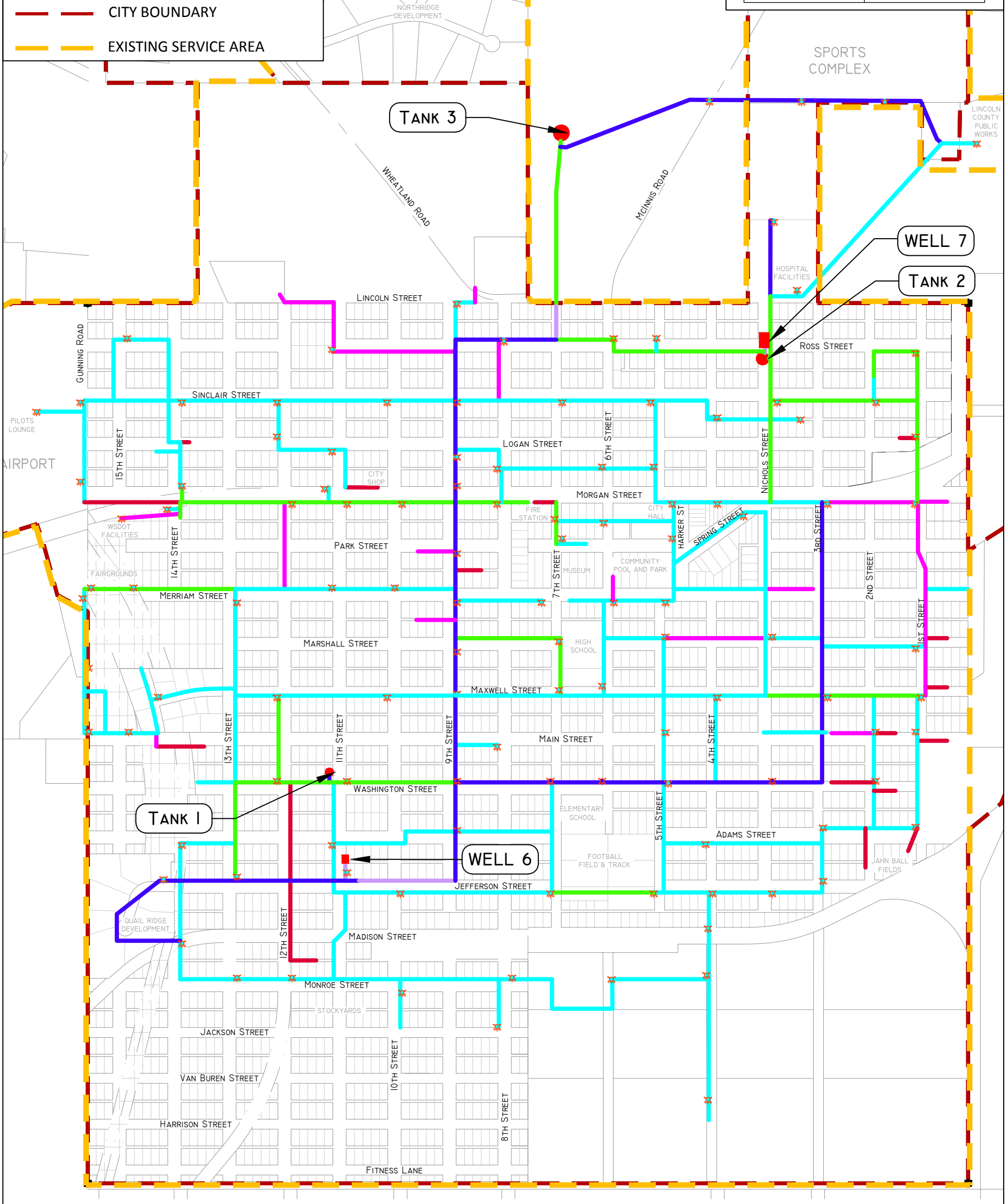

DISTRIBUTION PIPING BY SIZE (DIAMETER IN INCHES)

2047052800
MAY, 2016

ORIGINAL SHEET - ANSI B

U:\2047052800\drawing\C\sheets\1289800-EX3.dwg
2016/05/10 11:20 AM By: Wahlquist, Ryan

Stantec

621 West Mallon Avenue, Suite 309
Spokane WA
www.stantec.com

Client/Project
City of Davenport
Davenport
Water System Plan

Figure No.
EX3

Title
Existing Water System Map

Legend

- PVC
- DUCTILE IRON
- STEEL
- AC
- CAST IRON
- GALVANIZED IRON
- FIRE HYDRANT
- CITY BOUNDARY
- EXISTING SERVICE AREA

Pipe Inventory- By Material	
PVC	41,530 LF
Ductile Iron	24,689 LF
Steel	10,716 LF
AC	5,503 LF
Cast Iron	3,842 LF
Galv. Iron	1,789 LF
TOTAL	**88,079 LF**

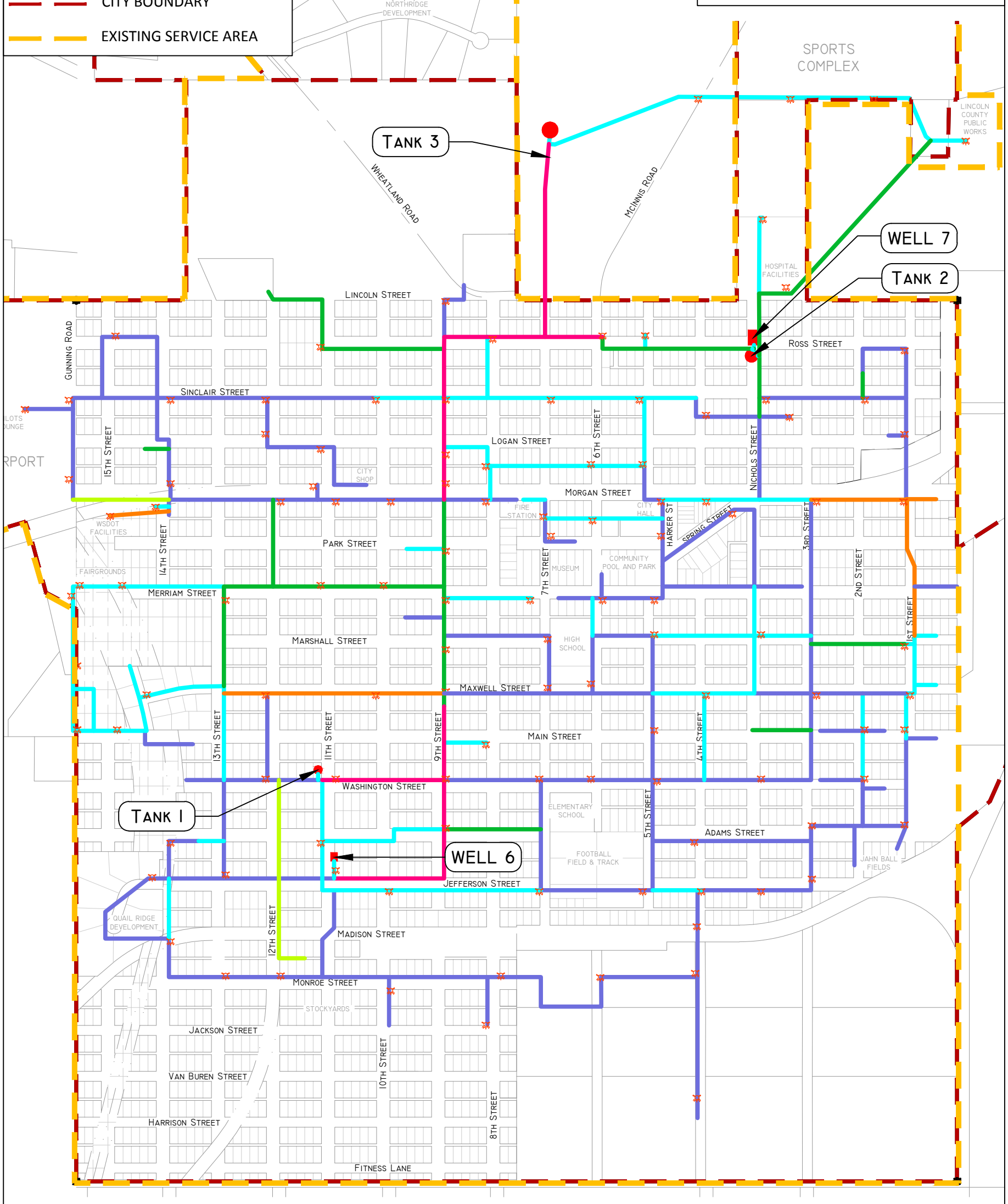

DISTRIBUTION PIPING BY PIPE MATERIAL

ORIGINAL SHEET - ANSI B

2047052800
MAY, 2016

U:\2047052800\drawing\C\sheets\1289800-EX4.dwg
2016/05/10 11:21 AM By: Wahlquist, Ryan

Stantec

621 West Mallon Avenue, Suite 309
Spokane WA
www.stantec.com

Client/Project
City of Davenport
Davenport
Water System Plan

Figure No.
EX4

Title
Existing Water System Map

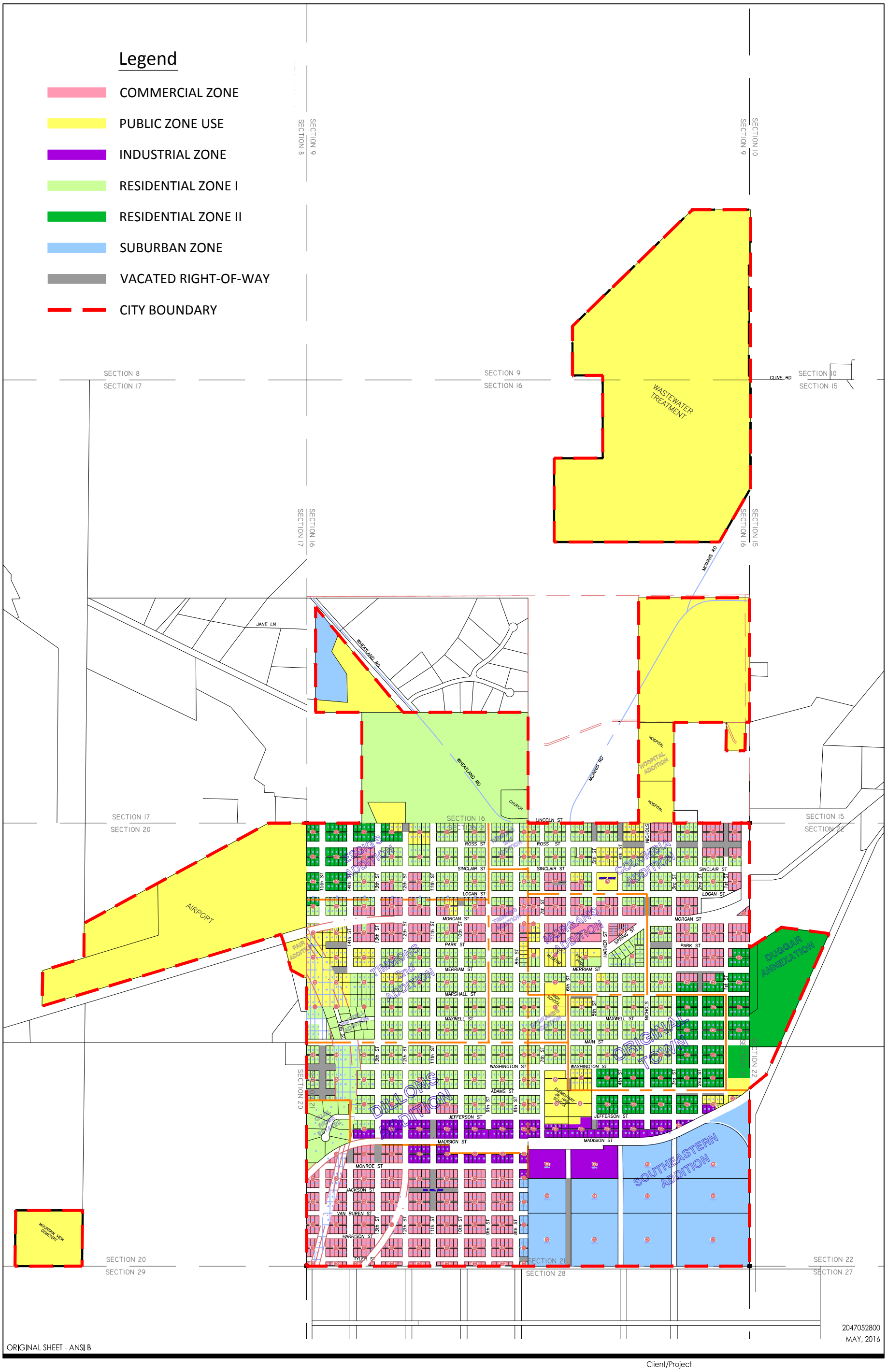

U:\2047052800\drawing\C\sheets\1289800-EX5.dwg
2016/05/10 11:22 AM By: Wahlquist, Ryan

ORIGINAL SHEET - ANSI B

2047052800
MAY, 2016

Stantec

621 West Mallon Avenue, Suite 309
Spokane WA
www.stantec.com

Client/Project
City of Davenport
Davenport
Water System Plan

Figure No.
EX5

Title
City of Davenport
Zoning Map

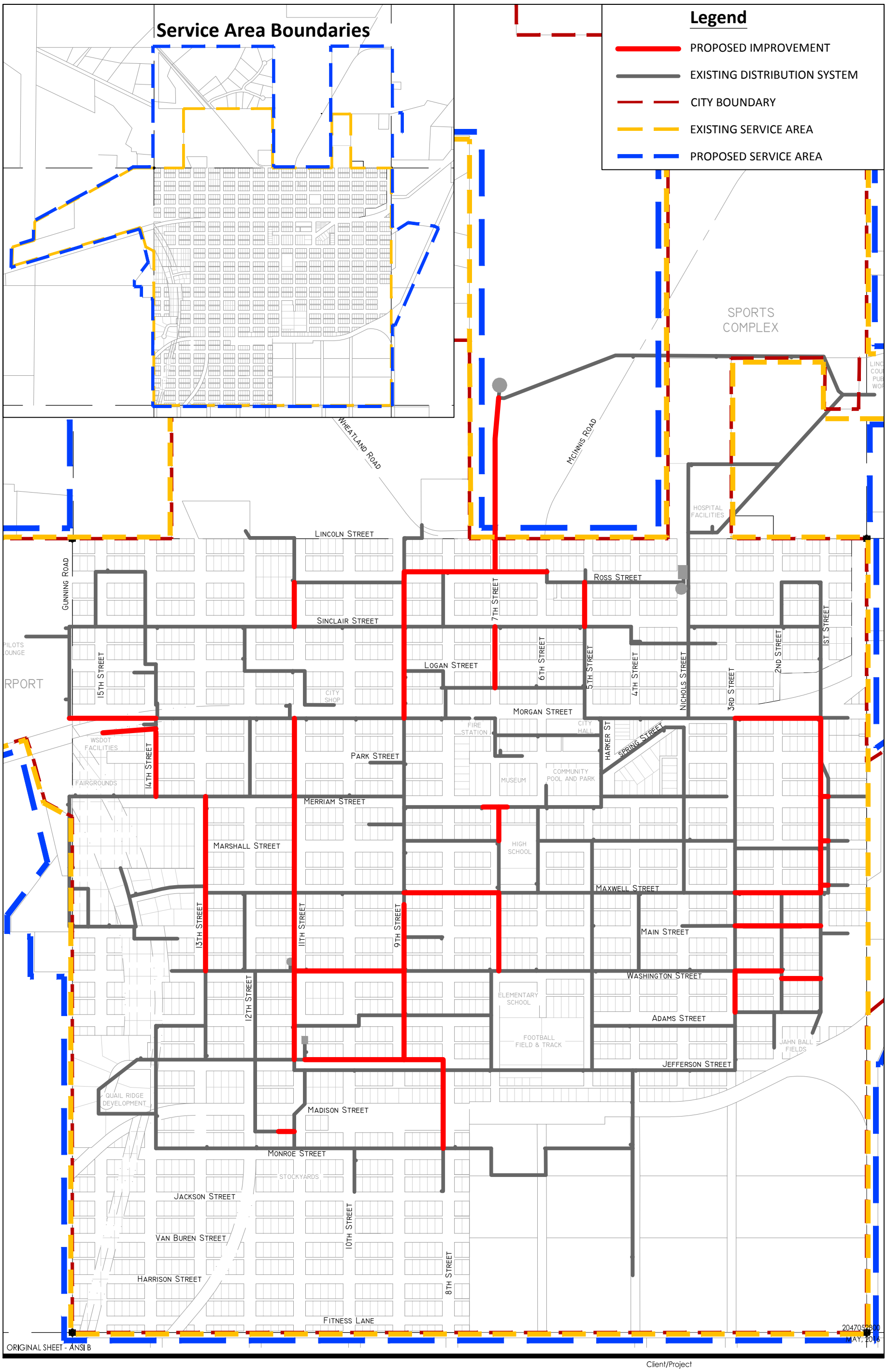

U:\2047052800\drawing\C\sheets\1289800-EX6.dwg
2016/05/10 11:23 AM By: Wahlquist, Ryan

Stantec

621 West Mallon Avenue, Suite 309
Spokane WA
www.stantec.com

Client/Project
City of Davenport
Davenport
Water System Plan

Figure No.
EX6

Title
Proposed Water System Improvements

Appendix B WELL LOGS

The Department of Ecology does NOT Warranty the Data and/or the Information on this Well Report.

STATE OF WASHINGTON
DEPARTMENT OF CONSERVATION
AND DEVELOPMENT

WELL LOG

Date 1914, 19__

No. Decla, #874
Cert. #788-D

Record by Jim Goodwin

Source G. W. Decla, Claim

Location: State of WASHINGTON

County Lincoln

~~NEX~~ Lot 10, Block 5 of

~~NEX~~ Dillon's Add.

__¼__¼ sec. 21 T. 25 N., R. 37 E. W.

DIAGRAM OF SECTION

Drilling Co.

Address

Method of Drilling drilled

Owner City of Davenport Date May 1 1948

Address Davenport, Wash.

Land surface, datum ft. above below

CORRELATION	MATERIAL	THICKNESS (feet)	DEPTH (feet)
	(Transcribe driller's terminology literally but paraphrase as necessary, in parenthesis. If material water-bearing, so state and record static level if reported. Give depths in feet below land-surface datum unless otherwise indicated. Correlate with stratigraphic column, if feasible. Following log of materials, list all casings, perforations, screens, etc.)		
	no record		
	Pump Test:		
	Dim: 503' x 15"		
	SWL: 172'		
	Dd: 50'		
	Yield: 500 g.p.m.		
	Casing: 15" dia. from 0' to 50'		
	Control by valves		
	Pump: 500 gallon, Pomona		
	Motor: 75 hp, Westinghouse		

Turn up

Sheet ___ of ___ sheets

The Department of Ecology does NOT Warranty the Data and/or the Information on this Well Report.

File Original and First Copy with Department of Ecology
Second Copy — Owner's Copy
Third Copy — Driller's Copy

WATER WELL REPORT

STATE OF WASHINGTON

Start Card No. A19993
UNIQUE WELL I.D. #
Water Right Permit No.

(1) OWNER: Name CITY OF DAVENPORT Address

LOCATION OF WELL: County LINCOLN NE 1/4 NE 1/4 Sec 21 T 25N N., R 37E W.M.

(2a) STREET ADDRESS OF WELL (or nearest address) DAVENPORT, WA

(3) PROPOSED USE: ☐ Domestic ☐ Irrigation ☐ DeWater Industrial ☐ Test Well ☐ Municipal ☒ Other ☐

(4) TYPE OF WORK: Owner's number of well (if more than one) #3
Abandoned ☒ New well ☐ Deepened ☐ Reconditioned ☐ Method: Dug ☐ Cable ☐ Rotary ☐ Bored ☐ Driven ☐ Jetted ☐

(5) DIMENSIONS: Diameter of well 16" inches.
Drilled _____ feet. Depth of completed well 720' ft.

(6) CONSTRUCTION DETAILS:
Casing installed: _____" Diam. from _____ ft. to _____ ft.
Welded ☐ _____" Diam. from _____ ft. to _____ ft.
Liner installed ☐ _____" Diam. from _____ ft. to _____ ft.
Threaded ☐

Perforations: Yes ☐ No ☐
Type of perforator used
SIZE of perforations _____ in. by _____ in.
_____ perforations from _____ ft. to _____ ft.
_____ perforations from _____ ft. to _____ ft.
_____ perforations from _____ ft. to _____ ft.

Screens: Yes ☐ No ☐
Manufacturer's Name
Type _____ Model No.
Diam. _____ Slot size _____ from _____ ft. to _____ ft.
Diam. _____ Slot size _____ from _____ ft. to _____ ft.

Gravel packed: Yes ☐ No ☐ Size of gravel
Gravel placed from _____ ft. to _____ ft.

Surface seal: Yes ☐ No ☐ To what depth? _____ ft.
Material used in seal
Did any strata contain unusable water? Yes ☐ No ☐
Type of water? _____ Depth of strata
Method of sealing strata off

(7) PUMP: Manufacturer's Name
Type: _____ H.P.

(8) WATER LEVELS: Land-surface elevation above mean sea level _____ ft.
Static level 50.5' ft. below top of well Date
Artesian pressure _____ lbs. per square inch Date
Artesian water is controlled by _____ (Cap, valve, etc.)

(9) WELL TESTS: Drawdown is amount water level is lowered below static level
Was a pump test made? Yes ☐ No ☐ If yes, by whom?
Yield: _____ gal./min. with _____ ft. drawdown after _____ hrs.

Recovery data (time taken as zero when pump turned off) (water level measured from well top to water level)

Time	Water Level	Time	Water Level	Time	Water Level

Date of test
Bailer test _____ gal./min. with _____ ft. drawdown after _____ hrs.
Airtest _____ gal./min. with stem set at _____ ft. for _____ hrs.
Artesian flow _____ g.p.m. Date
Temperature of water _____ Was a chemical analysis made? Yes ☐ No ☐

(10) WELL LOG or ABANDONMENT PROCEDURE DESCRIPTION

Formation: Describe by color, character, size of material and structure, and show thickness of aquifers and the kind and nature of the material in each stratum penetrated, with at least one entry for each change of information.

MATERIAL	FROM	TO
PRESSURE GROUT WITH NEAT CEMENT THROUGH 1½" TREMIE FROM 720' TO 5'		

Work Started 6/23, 1995 Completed 6/24, 1995

WELL CONSTRUCTOR CERTIFICATION

DEPARTMENT OF ECOLOGY
EASTERN REGIONAL OFFICE

I constructed and/or accept responsibility for construction of this well, and its compliance with all Washington well construction standards. Materials used and the information reported above are true to my best knowledge and belief.

NAME PONDEROSA DRILLING & DEVELOPMENT, INC. (PERSON, FIRM, OR CORPORATION) (TYPE OR PRINT)

Address E. 6010 BROADWAY, SPOKANE, WA 99212

(Signed) Robert Elliott License No. 1899
BOB ELLIOTT (TYPED OR PRINTED)

Contractor's Registration No. PO_ND_EL*248JE Date 9/19, 1995

(USE ADDITIONAL SHEETS IF NECESSARY)

ECL 050-1-20 (2/93)

The Department of Ecology does NOT Warranty the Data and/or the Information on this Well Report.

File Original and First Copy with Department of Ecology
Second Copy — Owner's Copy
Third Copy — Driller's Copy

WATER WELL REPORT

STATE OF WASHINGTON

Start Card No. A19993
UNIQUE WELL I.D. #
Water Right Permit No.

(1) OWNER: Name CITY OF DAVENPORT Address

LOCATION OF WELL: County LINCOLN NE 1/4 NE 1/4 Sec. 21 T. 25N N. R. 37E W.M.

(2a) STREET ADDRESS OF WELL (or nearest address) DAVENPORT, WA

(3) PROPOSED USE: ☐ Domestic ☐ Irrigation ☐ DeWater Industrial ☐ Test Well ☐ Municipal ☒ Other ☐

(4) TYPE OF WORK: Owner's number of well (if more than one) #3
Abandoned ☒ New well ☐ Deepened ☐ Reconditioned ☐
Method: Dug ☐ Cable ☐ Rotary ☐ Bored ☐ Driven ☐ Jetted ☐

(5) DIMENSIONS: Diameter of well 16" inches.
Drilled _____ feet. Depth of completed well 720' ft.

(6) CONSTRUCTION DETAILS:
Casing Installed: _____" Diam. from _____ ft. to _____ ft.
Welded ☐ _____" Diam. from _____ ft. to _____ ft.
Liner installed ☐ _____" Diam. from _____ ft. to _____ ft.
Threaded ☐

Perforations: Yes ☐ No ☐
Type of perforator used
SIZE of perforations _____ in. by _____ in.
_____ perforations from _____ ft. to _____ ft.
_____ perforations from _____ ft. to _____ ft.
_____ perforations from _____ ft. to _____ ft.

Screens: Yes ☐ No ☐
Manufacturer's Name
Type Model No.
Diam. _____ Slot size _____ from _____ ft. to _____ ft.
Diam. _____ Slot size _____ from _____ ft. to _____ ft.

Gravel packed: Yes ☐ No ☐ Size of gravel
Gravel placed from _____ ft. to _____ ft.

Surface seal: Yes ☐ No ☐ To what depth? _____ ft.
Material used in seal
Did any strata contain unusable water? Yes ☐ No ☐
Type of water? Depth of strata
Method of sealing strata off

(7) PUMP: Manufacturer's Name
Type: H.P.

(8) WATER LEVELS: Land-surface elevation above mean sea level _____ ft.
Static level 50.5' ft. below top of well Date
Artesian pressure _____ lbs. per square inch Date
Artesian water is controlled by (Cap, valve, etc.)

(9) WELL TESTS: Drawdown is amount water level is lowered below static level
Was a pump test made? Yes ☐ No ☐ If yes, by whom?
Yield: _____ gal./min. with _____ ft. drawdown after _____ hrs.
" " " "
" " " "

Recovery data (time taken as zero when pump turned off) (water level measured from well top to water level)

Time	Water Level	Time	Water Level	Time	Water Level

Date of test
Bailer test _____ gal./min. with _____ ft. drawdown after _____ hrs.
Airtest _____ gal./min. with stem set at _____ ft. for _____ hrs.
Artesian flow _____ g.p.m. Date
Temperature of water _____ Was a chemical analysis made? Yes ☐ No ☐

(10) WELL LOG or ABANDONMENT PROCEDURE DESCRIPTION

Formation: Describe by color, character, size of material and structure, and show thickness of aquifers and the kind and nature of the material in each stratum penetrated, with at least one entry for each change of information.

MATERIAL	FROM	TO
PRESSURE GROUT WITH NEAT CEMENT THROUGH 1½" TREMIE FROM 720' TO 5'		

Work Started 6/23 1995 Completed 6/24 1995

WELL CONSTRUCTOR CERTIFICATION:

I constructed and/or accept responsibility for construction of this well, and its compliance with all Washington well construction standards. Materials used and the information reported above are true to my best knowledge and belief.

NAME PONDEROSA DRILLING & DEVELOPMENT, INC. (PERSON, FIRM OR CORPORATION) (TYPE OR PRINT)

Address E. 6010 BROADWAY SPOKANE, WA 99212

(Signed) Bob Elliott (WELL DRILLER) License No. 1819
BOB ELLIOTT

Contractor's Registration No. PO ND EI*248JE Date 9/19 1995

(USE ADDITIONAL SHEETS IF NECESSARY)

ECL 050-1-20 (2/93)

The Department of Ecology does NOT Warranty the Data and/or the Information on this Well Report.

The Division of Water Management
Second Copy — Owner's Copy
Third Copy — Driller's Copy

WATER WELL REPORT
STATE OF WASHINGTON

Permit No. G3-21733P

(1) OWNER: Name CITY OF DAVENPORT Address DAVENPORT WASH. 37

(2) LOCATION OF WELL: County LINCOLN — NE ¼ SW ¼ Sec. 21 T. 25 N., R. 37E W.M.

Bearing and distance from section or subdivision corner N 40°-36' E, 2461' from SW cor. of section

PROPOSED USE: Domestic ☐ Industrial ☐ Municipal ☒ Irrigation ☐ Test Well ☐ Other ☐

(4) TYPE OF WORK: Owner's number of well (if more than one) #6

New well ☒ Method: Dug ☐ Bored ☐
Deepened ☐ Cable ☒ Driven ☐
Reconditioned ☐ Rotary ☐ Jetted ☐

(5) DIMENSIONS: Diameter of well 18 inches.
Drilled 975 ft. Depth of completed well 975 ft.

(6) CONSTRUCTION DETAILS:

Casing installed: 18" Diam. from +2 ft. to 445 ft.
Threaded ☐ ____" Diam. from ____ ft. to ____ ft.
Welded ☒ ____" Diam. from ____ ft. to ____ ft.

Perforations: Yes ☐ No ☒
Type of perforator used
SIZE of perforations ____ in. by ____ in.
____ perforations from ____ ft. to ____ ft.
____ perforations from ____ ft. to ____ ft.
____ perforations from ____ ft. to ____ ft.

Screens: Yes ☐ No ☒
Manufacturer's Name
Type Model No.
Diam. ____ Slot size ____ from ____ ft. to ____ ft.
Diam. ____ Slot size ____ from ____ ft. to ____ ft.

Gravel packed: Yes ☐ No ☒ Size of gravel:
Gravel placed from ____ ft. to ____ ft.

Surface seal: Yes ☒ No ☐ To what depth? 445 ft.
Material used in seal CEMENT SLURRY
Did any strata contain unusable water? Yes ☐ No ☒
Type of water? Depth of strata
Method of sealing strata off

(7) PUMP: Manufacturer's Name
Type: H.P.

(8) WATER LEVELS: Land-surface elevation above mean sea level 2420
Static level 220 ft. below top of well Date MAY 7-75
Artesian pressure ____ lbs. per square inch Date
Artesian water is controlled by (Cap, valve, etc.)

(9) WELL TESTS: Drawdown is amount water level is lowered below static level
Was a pump test made? Yes ☐ No ☒ If yes, by whom?
Yield: gal./min. with ft. drawdown after hrs.
"SEE ATTACHED EXPLANATION"
" " " "

Recovery data (time taken as zero when pump turned off) (water level measured from well top to water level)

Time	Water Level	Time	Water Level	Time	Water Level

Date of test
Bailer test 2200 gal./min. with 30 ft. drawdown after 12 hrs.
Artesian flow g.p.m. Date
Temperature of water 68° Was a chemical analysis made? Yes ☐ No ☒

(10) WELL LOG:

Formation: *Describe by color, character, size of material and structure, and show thickness of aquifers and the kind and nature of the material in each stratum penetrated, with at least one entry for each change of formation.*

MATERIAL	FROM	TO
CLAY (BRN)	0	7
CLAY + BRN BASALT SOFT	7	16
BASALT BRN MED ★	16	38
BASALT BLK MED ★	38	84
BASALT GREY HARD	84	158
BASALT BLACK FRACTURED ★	158	195
BASALT BLACK HARD	195	303
BASALT GREY SOFT ★	303	320
BASALT BLACK MED	320	338
BASALT BLACK FRACTURED ★	338	393
BASALT BLACK HARD	393	490
BASALT BLACK MED ★	490	532
BASALT BLACK HARD	532	578
BASALT BLACK SOFT ★	578	649
BASALT BLACK MED	649	727
BASALT BLACK FRACTURED ★	727	766
BASALT GREY HARD	766	776
BASALT + GREY CLAY SOFT	776	782
BASALT BLACK MED ★	782	799
BASALT + GREY CLAY SOFT ★	799	804
BASALT BLACK MED	804	826
BASALT BLACK SOFT ★	826	834
BASALT HARD BLACK	834	836
BASALT MED BLACK ★	836	860
BASALT GREY HARD	860	890
BASALT BLACK FRACTURED ★	890	946
BASALT GREY HARD	946	956
CRGUICG OF FRACTURE ★	956	959
BASALT GREY HARD	959	966
BASALT BLACK MED ★	966	975
2000		
- 1157		
★ INDICATES WATER BEARING STRATA		

Work started APRIL 10, 1974. Completed MAY 8, 1975

WELL DRILLER'S STATEMENT:

This well was drilled under my jurisdiction and this report is true to the best of my knowledge and belief.

NAME HOLMAN DRILLING CORP (Person, firm, or corporation) (Type or print)

Address E 3410 9TH AVE SPOKANE WN.

[Signed] Arnold E. Holman PRES. (Well Driller)

License No. 0189 Date JUNE 11, 1975

(USE ADDITIONAL SHEETS IF NECESSARY)

S. F. No. 7356—OS—(Rev. 5-69)—5-69.

6/18/75

The Department of Ecology does NOT Warranty the Data and/or the Information on this Well Report.

WASHINGTON STATE DEPARTMENT OF ECOLOGY

UNIQUE WELL I.D. NUMBER A B R 0 8 1
X Y Z 1 2 3

WELL TAGGING FORM

Date of Field Visit 7/20/94 By Larry Wendt IEL

ADDITIONAL WELL IDENTIFIERS

Department of Health System ID Number 18100 N Source Number SO 06

USGS Site Identification _____

RECORD VERIFICATION

- [x] Well Report available *(please attach)*
- [ ] Well Report not available
- [ ] Verification inconclusive

WELL OWNERSHIP, IF DIFFERENT FROM WELL REPORT

Name City of Davenport

Street address 411 Morgan Box 26

City Davenport State Wash. 99122

LOCATION OF WELL, IF DIFFERENT FROM WELL REPORT

Well Address _____

City _____ County _____

T.____N. R.____ ___ W M. Sec.____ ____¼ of the ____¼

Latitude ____° ____' ____"

Longitude ____° ____' ____"

- [ ] GPS (raw data)
- [ ] GPS (corrected)
- [ ] Topographic Map
- [ ] Survey
- [ ] Computer generated
- [ ] Other _____

Elevation at land surface ____ feet/meters *(circle one)*

- [ ] Digital Altimeter
- [ ] Topographic Map
- [ ] Other _____

The Department of Ecology does NOT Warranty the Data and/or the Information on this Well Report.

Additional information, if available:

☐ Location marked on topographic map *(please attach)*

☐ Location marked on air photo *(please attach)*

Water Right # _____ Priority Date _____

Circle one: Application Permit Certificate Claim Exempt

WELL CHARACTERISTICS

Physical Description of Well (size of casing, type of well, housing, etc.): _____

_____

Location of Well Identification Tag: _____

_____

Was Supplemental Tag needed for ease of identifying well?
☐ NO ☐ YES

If yes, where was tag placed? _____

Scale 1:24,000 (1"=2,000')

D	C	B	A
E	F	G	H
M	L	K	J
N	P	Q	R

Indicate the location of the well within the Section by drawing a dot at that point.

SECTION _____

COMMENTS: All Info should be in the attached well Report.

Please attach this form to the Well Report and submit it to the Department of Ecology Water Resources Program Headquarters, Well Identification Program, P.O. Box 47600, Olympia, WA 98504-7600

Permit No

(1) OWNER: Name CITY OF DAVENPORT Address DAVENPORT WASH

(2) LOCATION OF WELL: County LINCOLN NE ¼ SW ¼ Sec 21 T 25 N, R 37 E WM

Bearing and distance from section or subdivision corner N 40°36'E, 2461' from SW cor. of section

(3) PROPOSED USE: Domestic ☐ Industrial ☒ Municipal ☒ Irrigation ☐ Test Well ☐ Other ☐

(4) TYPE OF WORK: Owner's number of well (if more than one) #6

New well ☒ Deepened ☐ Reconditioned ☐

Method Dug ☐ Cable ☒ Rotary ☐ Bored ☐ Driven ☐ Jetted ☐

(5) DIMENSIONS: Diameter of well 18 inches. Drilled 975 ft. Depth of completed well 975 ft.

(6) CONSTRUCTION DETAILS:

Casing installed: 18" Diam from +2 ft to 445 ft

Threaded ☐ Diam from ft to ft

Welded ☒ Diam from ft to ft

Perforations: Yes ☐ No ☒

Type of perforator used

SIZE of perforations in by in

perforations from ft to ft

perforations from ft to ft

perforations from ft to ft

Screens: Yes ☐ No ☒

Manufacturer's Name

Type Model No.

Diam Slot size from ft to ft

Diam Slot size from ft to ft

Gravel packed: Yes ☐ No ☒ Size of gravel

Gravel placed from ft to ft

Surface seal: Yes ☒ No ☐ To what depth? 445 ft

Material used in seal CEMENT SLURRY

Did any strata contain unusable water? Yes ☐ No ☒

Type of water? Depth of strata

Method of sealing strata off

(7) PUMP: Manufacturer's Name

Type H.P.

(8) WATER LEVELS: Land-surface elevation above mean sea level

Static level 220 ft below top of well Date MAY 7 '75

Artesian pressure lbs per square inch Date

Artesian water is controlled by (Cap, valve, etc.)

(9) WELL TESTS: Drawdown is amount water level is lowered below static level

Was a pump test made? Yes ☐ No ☒ If yes, by whom?

Yield gal./min with ft drawdown after hrs

SEE ATTACHED EXPLANATION

Recovery data (time taken as zero when pump turned off) (water level measured from well top to water level)

Time	Water Level	Time	Water Level	Time	Water Level

Date of test

Bailer test gal./min with ft drawdown after hrs

Artesian flow g.p.m. Date

Temperature of water 68° Was a chemical analysis made? Yes ☐ No ☒

(10) WELL LOG:

Formation: Describe by color, character, size of material and structure, and show thickness of aquifers and the kind and nature of the material in each stratum penetrated, with at least one entry for each change of formation

MATERIAL	FROM	TO
CLAY (BRN)	0.	7
CLAY + BRN BASALT SOFT	7	16
BASALT BRN MED ★	16	38
BASALT BLK MED ★	38	84
BASALT GREY HARD	84	158
BASALT BLACK FRACTURED ★	158	195
BASALT BLACK HARD	195	303
BASALT GREY SOFT ★	303	320
BASALT BLACK MED	320	338
BASALT BLACK FRACTURED ★	338	393
BASALT BLACK HARD	393	490
BASALT BLACK MED ★	490	532
BASALT BLACK HARD	532	578
BASALT BLACK SOFT ★	578	649
BASALT BLACK MED	649	727
BASALT BLACK FRACTURED ★	727	766
BASALT GREY HARD	766	776
BASALT + GREY CLAY SOFT	776	782
BASALT BLACK MED ★	782	799
BASALT + GREY CLAY SOFT ★	799	804
BASALT BLACK MED	804	826
BASALT BLACK SOFT ★	826	834
BASALT HARD BLACK	834	836
BASALT MED BLACK ★	836	860
BASALT GREY HARD	860	890
BASALT BLACK FRACTURED ★	890	946
BASALT GREY HARD	946	958
CRACKS OR FRACTURE ★	958	959
BASALT GREY HARD	959	966
BASALT BLACK MED ★	966	975
★ INDICATES WATER BEARING STRATA		

Work started APRIL 10, 1974 Completed MAY 8, 1975

WELL DRILLER'S STATEMENT:

This well was drilled under my jurisdiction and this report is true to the best of my knowledge and belief.

NAME HOLMAN DRILLING CORP (Person, firm, or corporation) (Type or print)

Address E 3410 9TH AVE SPOKANE WN.

[Signed] Arnold E. Holman PRES (Well Driller)

License No. 0189 Date JUNE 11, 1975

S F No 7356—OS—(Rev 5-69)—5-69

(USE ADDITIONAL SHEETS IF NECESSARY)

The Department of Ecology does NOT Warranty the Data and/or the Information on this Well Report.

The Department of Ecology does NOT Warranty the Data and/or the Information on this Well Report.

WATER WELL REPORT

FOR

Well #6: Davenport, Wash.

(9) WELL TESTS: A pump test was performed following completion of the 18" nominal diameter well to a depth of 773 feet. Static water level before starting pump test was at about (-) 93 feet. The results of the pump test are attached.

After the pump test, which did not indicate much production possible at this depth, the well has been deepened with a 12" nominal hole to a depth of 975 feet. The City of Davenport has made arrangements to test pump the well again, probably in the last week in June. Results of this test will be forwarded after completion.

The Department of Ecology does NOT Warranty the Data and/or the Information on this Well Report.

Lohman
E. 5446 N. THRIFT AVE. SPOKANE, WASH. KE 4-1013

DAVENPORT CITY WELL NO. 6 — COMPLETED MAY 8, 1975

DEPTH	MATERIAL	S. W. L.	REMARKS
0-7	Clay--Brown		
7-16	Basalt--Brown *		
16-38	Basalt--Brown *	12 ft.	24" hole drilled to 23'
38-84	Basalt--Black *		18" casing cemented 0-35 ft.
84-158	Basalt--Grey	16 ft.	
158-195	Basalt--Black *		
195-303	Basalt--Black	16 ft.	
303-320	Basalt--Grey *	20 ft.	
320-338	Basalt--Black	27 ft.	
338-393	Basalt--Black *	27 ft.	
393-490	Basalt--Black Hard	27 ft.	18" casing set at 445 ft.
490-532	Basalt--Black *	27 ft.	Bottom 15' set in cement
532-578	Basalt--Black	27 ft.	
578-649	Basalt--Black Soft*	100 ft.	First main aquifer
649-727	Basalt--Black	100 ft.	
727-766	Basalt--Black *	100 ft.	
766-773	Basalt--Grey Hard	100 ft.	Bottom of 17" hole
DEEPENING			
773-776	Basalt--Grey Hard	172 ft.	Start of 12" Hole
776-782	Basalt & Grey Clay	172 ft.	
782-799	Basalt--Black *	213 ft.	
799-804	Basalt & Grey Clay*	216 ft.	
804-826	Basalt--Black	217 ft.	
826-860	Basalt--Black *	213 ft.	
860-890	Basalt--Black Hard	211 ft.	
890-946	Basalt--Black *	219 ft.	Second main aquifer
946-958	Basalt--Grey Hard	219 ft.	
958-959	Crevice *	220 ft.	
959-966	Basalt--Hard	220 ft.	
966-975	Basalt--Med. *	220 ft.	Total Depth

* Indicates water bearing strata

File Original and First Copy with Department of Ecology
Second Copy — Owner's Copy
Third Copy — Driller's Copy

WATER WELL REPORT

STATE OF WASHINGTON

Start Card No. W059906
UNIQUE WELL I.D. # ABJ061
Water Right Permit No.

(1) OWNER: Name ~~City of Davenport~~ Address P.O. BOX 26 Davenport, WA 99122

(2) LOCATION OF WELL: County Lincoln NE 1/4 NE 1/4 Sec 21 T. 25 N., R. 37 W.M.

(2a) STREET ADDRESS OF WELL (or nearest address) Corner of Ross & Nicols Streets

(3) PROPOSED USE: ☐ Domestic ☐ Irrigation ☐ DeWater Industrial ☐ Test Well ☐ Municipal ☒ Other ☐

(4) TYPE OF WORK: Owner's number of well (if more than one) 7
Abandoned ☐ New well ☒ Deepened ☐ Reconditioned ☐
Method: Dug ☐ Cable ☐ Rotary ☒ Bored ☐ Driven ☐ Jetted ☐

(5) DIMENSIONS: Diameter of well 16 inches.
Drilled 959 feet. Depth of completed well 845 ft.

(6) CONSTRUCTION DETAILS:
Casing installed: 20" Diam. from +1 ft. to 37 ft.
Welded ☒ Liner installed ☐ Threaded ☐
16" Diam. from +2 ft. to 447 ft.
" Diam. from ft. to ft.

Perforations: Yes ☐ No ☒
Type of perforator used
SIZE of perforations
perforations from ft. to
perforations from ft. to
perforations from ft. to

Screens: Yes ☐ No ☒
Manufacturer's Name
Type Model No.
Diam. Slot size from ft. to ft.
Diam. Slot size from ft. to ft.

Gravel packed: Yes ☒ No ☐ Size of gravel 1 1/4"
Gravel placed from 845 ft. to 959 ft.

Surface seal: Yes ☒ No ☐ To what depth? 447 ft.
Material used in seal cement
Did any strata contain unusable water? Yes ☐ No ☒
Type of water? Depth of strata
Method of sealing strata off

RECEIVED AUG 25 1995 BY
DEPARTMENT OF ECOLOGY EASTERN REGIONAL OFFICE

(7) PUMP: Manufacturer's Name
Type: H.P.

(8) WATER LEVELS: Land-surface elevation above mean sea level ft.
Static level ft. below top of well Date
Artesian pressure lbs. per square inch Date
Artesian water is controlled by (Cap, valve, etc.)

(9) WELL TESTS: Drawdown is amount water level is lowered below static level
Was a pump test made? Yes ☐ No ☐ If yes, by whom?
Yield: gal./min. with ft. drawdown after hrs.
" " " "
" " " "

Recovery data (time taken as zero when pump turned off) (water level measured from well top to water level)

Time	Water Level	Time	Water Level	Time	Water Level

Date of test
Bailer test gal./min. with ft. drawdown after hrs.
Airtest gal./min. with stem set at ft. for hrs.
Artesian flow g.p.m. Date
Temperature of water Was a chemical analysis made? Yes ☐ No ☐

(10) WELL LOG or ABANDONMENT PROCEDURE DESCRIPTION

Formation: Describe by color, character, size of material and structure, and show thickness of aquifers and the kind and nature of the material in each stratum penetrated, with at least one entry for each change of information.

MATERIAL	FROM	TO
Top Soil	0	1
Bolders	1	10
Decomposed Porus Basalt	10	33
Fractured Basalt Black	33	49
Decomposed Basalt	49	53
Fractured Basalt Black	53	110
Gray Basalt Hard	110	124
Black Basalt with Layers of decomposed basalt	124	150
Fractured Black Basalt	150	205
Gray Basalt Hard	205	242
Blue Shale	242	246
Black Basalt with Layers of Blue Shale	246	265
Fractured Black Basalt	265	283
Black Basalt w/Layers of Blue Shale	283	336
Fractured Black Basalt	336	360
Fractured Gray Basalt	360	378
Black Basalt w/Layers of Brown Clay	378	418
Fractured Black Basalt	418	438
Black Basalt Hard	438	476
Black Basalt w/Layers Blue Shale	476	500
Fractured Black Basalt	500	506
Black Basalt / Layers Porus	506	660
Fractured Black Basalt	660	723
Black Basalt / Layers Porus	723	781
Sand with Blue Shale	781	783
Black Basalt Hard	783	795
Gray Basalt Hard	795	810
Fractured Gray Basalt Hard	810	~~946~~
Porus Black Basalt	846	858
Soft Wood & Sand	858	881
Sand & Hard Gray Clay	881	902
Decomposed Granite	902	915
Granite	915	959

Work Started June 26, 1995 Completed August 14, 1995

WELL CONSTRUCTOR CERTIFICATION:

I constructed and/or accept responsibility for construction of this well, and its compliance with all Washington well construction standards. Materials used and the information reported above are true to my best knowledge and belief.

NAME PONDEROSA DRILLING & DEVELOPMENT, INC. (PERSON, FIRM, OR CORPORATION) (TYPE OR PRINT)

Address E. 6010 BROADWAY AVE., SPOKANE, WA 99212

(Signed) Roger Kuhlman (WELL DRILLER) License No. 2095
Roger Kuhlman

Contractor's Registration No. PONDE*248JE Date Aug 25, 1995

(USE ADDITIONAL SHEETS IF NECESSARY)

ECL 050-1-20 (2/93)

The Department of Ecology does NOT Warranty the Data and/or the Information on this Well Report.

The Department of Ecology does NOT Warranty the Data and/or the Information on this Well Report.

Corrected copy

WATER WELL REPORT

STATE OF WASHINGTON

Start Card No. W059906
Unique Well I.D. # ABJ061
Water Right Permit No.

(1) OWNER: Name CITY OF DAVENPORT Address P.O. BOX 26 DAVENPORT, WA 99122-

(2) LOCATION OF WELL: County LINCOLN - NE 1/4 NE 1/4 Sec 21 T 25 N., R 37 WM
(2a) STREET ADDRESS OF WELL (or nearest address) CORNER OF ROSS & NICOLS,

(3) PROPOSED USE: MUNICIPAL

(4) TYPE OF WORK: Owner's Number of well (If more than one) 7
NEW WELL Method: ROTARY

(5) DIMENSIONS: Diameter of well 16 inches
Drilled 959 ft. Depth of completed well 845 ft.

(6) CONSTRUCTION DETAILS:
Casing installed: 20 " Dia. from +1 ft. to 37 ft.
16 " Dia. from +2 ft. to 447 ft.
" Dia. from ft. to ft.

Perforations: NO
Type of perforator used
SIZE of perforations in. by in.
perforations from ft. to ft.
perforations from ft. to ft.
perforations from ft. to ft.

Screens: NO
Manufacturer's Name
Type Model No.
Diam. slot size from ft. to ft.
Diam. slot size from ft. to ft.

Gravel packed: YES Size of gravel 1.25
Gravel placed from 845 ft. to 959 ft.

Surface seal: YES To what depth? 447 ft.
Material used in seal BENTONITE
Did any strata contain unusable water? NO
Type of water? Depth of strata ft.
Method of sealing strata off OVERBORE

(7) PUMP: Manufacturer's Name
Type H.P.

(8) WATER LEVELS: Land-surface elevation above mean sea level ... ft.
Static level 265 ft. below top of well Date 09/22/95
Artesian Pressure lbs. per square inch Date
Artesian water controlled by

(10) WELL LOG

Formation: Describe by color, character, size of material and structure, and show thickness of aquifers and the kind and nature of the material in each stratum penetrated, with at least one entry for each change in formation.

MATERIAL	FROM	TO
TOPSOIL	0	1
BOULDERS	1	10
DECOMPOSED POROUS BASALT	10	33
FRACTURED BASALT BLACK	33	49
DECOMPOSED BASALT	49	53
FRACTURED BASALT BLACK	53	110
GREY BASALT HARD	110	124
BASALT LAYER(S) DECOMPOSED	124	150
FRACTURED BLACK BASALT	150	205
GREY BASALT HARD	205	242
BLUE SHALE	242	246
BASALT LAYER(S) SHALE	246	265
FRACTURED BLACK BASALT	265	283
BASALT WITH SHALE, LAYERED	283	336
FRACTURED BLACK BASALT	336	360
FRACTURED GREY BASALT	360	378
BASALT CLAY LAYER(S)	378	418
FRACTURED BLACK BASALT	418	438
BLACK BASALT HARD	438	476
BLACK BASALT SHALE, LAYERED	476	500
FRACTURED BLACK BASALT	500	506
BASALT POROUS LAYER(S)	506	660
FRACTURED BLACK BASALT	660	723
BASALT POROUS LAYER(S)	723	781
SAND BLUE SHALE	781	783
BLACK BASALT HARD	783	795
GREY BASALT HARD	795	810
FRACTURED GREY BASALT	810	846
POROUS BLACK BASALT	846	858
SOFT SAND	858	881
SAND HARD CLAY	881	902
DECOMPOSED GRANITE	902	915
GRANITE	915	959
	959	

Work started 06/26/95 Completed 08/15/95

(9) WELL TESTS: Drawdown is amount water level is lowered below static level.
Was a pump test made? YES If yes, by whom? PONDEROSA
Yield: 1050 gal./min with 355 ft. drawdown after 8 hrs.

Recovery data

Time	Water Level	Time	Water Level	Time	Water Level

Date of test 09/22/95
Bailer test gal/min. ft. drawdown after hrs.
Air test gal/min. w/ stem set at ft. for hrs.
Artesian flow g.p.m. Date
Temperature of water 67 Was a chemical analysis made? NO

WELL CONSTRUCTOR CERTIFICATION:
I constructed and/or accept responsibility for construction of this well, and its compliance with all Washington well construction standards. Materials used and the information reported above are true to my best knowledge and belief.

NAME PONDEROSA DRILLING
(Person, firm, or corporation) (Type or print)

ADDRESS E 6010 BROADWAY

[SIGNED] [signature] Licensee No. 2095

Contractor's Registration No. PO-ND-EI*248JE Date 01/22/96

The Department of Ecology does NOT Warranty the Data and/or the Information on this Well Report.

STATE OF WASHINGTO.
DEPARTMENT OF CONSERVATION
AND DEVELOPMENT

WELL LOG No. A-5893 C-4317

Date 11-5, 19 62

Record by

Source

Location: State of WASHINGTON Well #2

County Lincoln

Area

Map

¼ ¼ sec 20 T. 25 N., R. 37 E. W.

Diagram of Section

Drilling Co. Jasper N. Jones well drilling

Address Davenport, Washington

Method of Drilling Date 1-6-, 19 61

Owner City of Davenport

Address Davenport, Washington

Land surface, datum ft. above below

Correlation	Material	Thickness (feet)	Depth (feet)
	Clay	0	63
	Basalt, broken (water at 85)	63	118
	Basalt, very hard	118	142
	Basalt, broken	142	192
	Basalt, hard, gray, caving	192	205
	Basalt, hard, gray, (crevice 254)	205	270
	Basalt, very hard (crevice)	270	291
	Basalt, hard, caving	291	305
	Basalt, hard	305	312
	Basalt, broken and porous	312	360
	Big water	348	360
	Depth drilled 360 ft - Diam of well 10 inches -		
	Depth of completed well 360 ft.		
	Irrigation well		
	Casing: 10 in. diam from 0 to 63 ft.		

(Transcribe driller's terminology literally but paraphrase as necessary, in parentheses. If material water-bearing, so state and record static level if reported. Give depths in feet below land-surface datum unless otherwise indicated. Correlate with stratigraphic column, if feasible. Following log of materials, list all casings, perforations, screens, etc.)

Turn up (over) Sheet of sheets

The Department of Ecology does NOT Warranty the Data and/or the Information on this Well Report.

WELL LOG.—Continued No...../.....-.....

CORRELATION	MATERIAL	THICKNESS (feet)	DEPTH (feet)
	Depth forward	———	
	Water levels: static level 82 ft (1-6-61)		
	Well Tests:		
	Yield 180 gpm with 12 ft drawdown after 3 hrs		
	Yield 355 gpm with 36 ft drawdown after 3 hrs		
	Pump: (set at 342 ft)		

S. F. No. 7449—OS—6-61—2M

The Department of Ecology does NOT Warranty the Data and/or the Information on this Well Report.

STATE OF WASHINGTON
DEPARTMENT OF CONSERVATION AND DEVELOPMENT

WELL LOG

No. Unrecorded

Date 11-1, 1962

Record by

Source City Clerk

Location: State of WASHINGTON

County Lincoln

Area

Map

¼ ¼ sec 21 T. 25 N., R. 37 E. W.

Diagram of Section

Drilling Co. Jasper Jones

Address Davenport

Method of Drilling Cable Date 4-7-, 1962

Owner City of Davenport #5

Address Davenport, Washington

Land surface, datum ft above below

Correlation	Material	Thickness (feet)	Depth (feet)
	(Transcribe driller's terminology literally but paraphrase as necessary, in parentheses. If material water-bearing, so state and record static level if reported. Give depths in feet below land-surface datum unless otherwise indicated. Correlate with stratigraphic column, if feasible. Following log of materials, list all casings, perforations, screens, etc.)		
	Soil and gravel	0	6
	Basalt, broken, brown	6	50
	Basalt, hard, gray	50	75
	Basalt, black	72	90
	Basalt, brown, hard	90	108
	Basalt, gray, very hard	108	131
	Basalt, gray, hard	131	143
	Basalt, broken into cubes, water	143	148
	Basalt, broken and shells	148	163
	Basalt, black	163	174
	Basalt, gray, very hard	174	198
	Basalt, gray very hard	198	219
	Basalt, gray to black (crevice)	215	230
	Basalt, black	219	230
	Basalt, black, very dense	230	245
	Basalt, gray layers and hard		

Turn up (over)

Sheet of sheets

The Department of Ecology does NOT Warranty the Data and/or the Information on this Well Report.

WELL LOG.—Continued No...../.....-.....

Consolidation	Material	Thickness (feet)	Depth (feet)
	Depth forward	———	
	layers (crevice at 245)	245	255
	Basalt, light colored	255	260
	Basalt, light gray, very hard	260	275
	Basalt, broken, some green clay Some water at 284	275	284
	Basalt, broken, shells Water at 312	284	315
	Basalt, broken, shells, caving	315	340
	Basalt with shells	340	365
	Basalt, hard, black, with soft	365	374
	Clay broken basalt, water lowered in hole	374	380
	Basalt, black, hard	380	395
	Basalt, hard, gray (caving)	395	410
	Basalt, hard, gray	410	420
	Basalt, broken, shells, water at 445	420	455
	Basalt, gray	455	482
	Basalt, broken, black, shells	482	490
	Basalt, gray	490	495
	Bailed and measured at 501 ft.		
	Casing: 12 in diam from 0 to 60 ft		
	Construction: surface - two yds concrete		
	Water levels: SWL 89 ft (4-4-62)		
	Well tests: Dickerson Mach. Yield 750 gpm with 204 ft drawdown after 5 hrs. Recovery 61 ft in 21 min.		
	Proposed use: irrigation		

S. F. No. 1449—OS—6-61—2M.

275287

Please print, sign and return to the Department of Ecology

RESOURCE PROTECTION WELL REPORT

RECEIVED

CURRENT Notice of Intent No. AD82410

(SUBMIT ONE WELL REPORT PER WELL INSTALLED)

OCT 25 2007

DEPARTMENT OF ECOLOGY
WELL DRILLING UNIT

Construction/Decommission *("x" in box)*

☒ Construction
☒ Decommission

ORIGINAL INSTALLATION Notice of Intent Number: SE 01689

Consulting Firm

Unique Ecology Well IDTag No. NA

WELL CONSTRUCTION CERTIFICATION: I constructed and/or accept responsibility for construction of this well, and its compliance with all Washington well construction standards. Materials used and the information reported above are true to my best knowledge and belief.

☒ Driller ☐ Engineer ☐ Trainee

Name (Print Last, First Name) David Thompson

Driller/Engineer /Trainee Signature [signature]

Driller or Trainee License No. 2493

If trainee, licensed driller's Signature and License Number:

Type of Well *("x in box)*

☐ Resource Protection
☒ Geotech Soil Boring

Property Owner City of Davenport

Site Address 6th + Park

City Davenport County Lincoln

Location NE 1/4-1/4 SW 1/4 Sec 21 Twn 25 R 37

EWM ☒ or WWM ☐

Lat/Long (s, t, r still REQUIRED) Lat Deg ____ Min ____ Sec ____ Long Deg ____ Min ____ Sec ____

Tax Parcel No.

Cased or Uncased Diameter NA Static Level

Work/Decommission Start Date 5/8/07

Work/Decommission Completed Date

Construction Design	Well Data	Formation Description
Backfilled w B-Chips B-1	Sand w silt + Gravel 12' Silt w Clay + Sand 14' Gravel w silt + Sand 19'	

OCT 31 2007

SCALE: 1"= ____ PAGE ____ OF ____

ECY 050-12 (Rev. 7/06)

Ecology is an Equal Opportunity Employer

The Department of Ecology does NOT Warranty the Data and/or the Information on this Well Report.

275286

Please print, sign and return to the Department of Ecology

RESOURCE PROTECTION WELL REPORT

CURRENT Notice of Intent No. 82410

(SUBMIT ONE WELL REPORT PER WELL INSTALLED)

RECEIVED

OCT 25 2007

DEPARTMENT OF ECOLOGY
WELL DRILLING UNIT

Construction/Decommission *("x" in box)*

☒ Construction
☒ Decommission

ORIGINAL INSTALLATION Notice of Intent Number: SE 01689

Type of Well *("x in box)*

☐ Resource Protection
☒ Geotech Soil Boring

Property Owner City of Davenport

Street Address 6th & Park

Consulting Firm

City Davenport County Lincoln

Unique Ecology Well IDTag No. NA

Location NE 1/4-1/4 SW 1/4 Sec 21 Twn 25 R 37

EWM ☒ or WWM ☐

WELL CONSTRUCTION CERTIFICATION: I constructed and/or accept responsibility for construction of this well, and its compliance with all Washington well construction standards. Materials used and the information reported above are true to my best knowledge and belief.

Lat/Long (s, t, r still REQUIRED) Lat Deg _____ Min _____ Sec _____ Long Deg _____ Min _____ Sec _____

☒ Driller ☐ Engineer ☐ Trainee

Name (Print Last, First Name) David Thompson

Driller/Engineer /Trainee Signature [signature]

Driller or Trainee License No. 2493

Tax Parcel No.

Cased or Uncased Diameter NA Static Level

Work/Decommission Start Date 5/8/07

Work/Decommission Completed Date

If trainee, licensed driller's Signature and License Number:

Construction Design	Well Data	Formation Description
Backfilled w B-Chips B-2	fine to course Sand w/Gravel 15'	

'07 OCT 19 AM 8:24
DEPT. OF ECOLOGY
FISCAL & BUDGET

OCT 31 2007

SCALE: 1"= _____ PAGE _____ OF _____

ECY 050-12 (Rev. 7/06)

Ecology is an Equal Opportunity Employer

The Department of Ecology does NOT Warranty the Data and/or the Information on this Well Report.

278837

Please print, sign and return by mail to Department of Ecology

RESOURCE PROTECTION WELL REPORT

CURRENT Notice of Intent No. 582410

(SUBMIT ONE WELL REPORT PER WELL INSTALLED)

Construction/Decommission *(select one)*

☐ Construction

☒ Decommission *ORIGINAL INSTALLATION Notice of Intent Number* _____

Consulting Firm GeoEngineers inc

Unique Ecology Well ID Tag No. _____

WELL CONSTRUCTION CERTIFICATION: I constructed and/or accept responsibility for construction of this well, and its compliance with all Washington well construction standards. Materials used and the information reported above are true to my best knowledge and belief.

☑ Driller ☐ Engineer ☐ Trainee Name (Print) David Thompson

Driller/Engineer /Trainee Signature _____

Driller or Trainee License No. 2493

If trainee, licensed driller's Signature and License No. 2493

Type of Well *(select one)*

☐ Resource Protection

☑ Geotech Soil Boring

Property Owner City of Davenport

Site Address 6th and park

City davenport County lincoln co.

Location ne 1/4-1/4 sw 1/4 Sec 21 Twn 25 R 37 Select One ☒ EWM ☐ WWM

Lat/Long (s, t, r still REQUIRED) Lat Deg _____ Lat Min/Sec _____ Long Deg _____ Long Min/Sec _____

Tax Parcel No. _____

Cased or Uncased Diameter 7.5" Static Level _____

Work/Decommission Start Date 5-08-07

Work/Decommission Completed Date 5-08-07

Construction/Design	Well Data	Formation Description
Backfilled using holeplug 8.5'	B-3 auger rig using 7.5" augers backfilled using holeplug	Silt 6' Clay & Sand 8' Clay Sand & Gravel 18.5' Auger Refusal

RECEIVED
DEC 05 2007
DEPARTMENT OF ECOLOGY
WELL DRILLING UNIT

RECEIVED
DEC 10 2007
DEPARTMENT OF ECOLOGY
EASTERN REGIONAL OFFICE

'07 DEC -3 A8:29
DEPT. OF ECOLOGY
FISCAL & BUDGET

The Department of Ecology does NOT Warranty the Data and/or the Information on this Well Report.

The Department of Ecology does NOT Warranty the Data and/or the Information on this Well Report.

278838

Please print, sign and return by mail to Department of Ecology

RESOURCE PROTECTION WELL REPORT

CURRENT Notice of Intent No. 82410

(SUBMIT ONE WELL REPORT PER WELL INSTALLED)

Construction/Decommission *(select one)*

☐ Construction

☒ Decommission *ORIGINAL INSTALLATION Notice of Intent Number* _____

Consulting Firm GeoEngineers inc

Unique Ecology Well ID Tag No. _____

WELL CONSTRUCTION CERTIFICATION: I constructed and/or accept responsibility for construction of this well, and its compliance with all Washington well construction standards. Materials used and the information reported above are true to my best knowledge and belief.

☑ Driller ☐ Engineer ☐ Trainee Name (Print) David Thompson

Driller/Engineer /Trainee Signature [signature]

Driller or Trainee License No. 2493

If trainee, licensed driller's Signature and License No. 2493

Type of Well *(select one)*

☐ Resource Protection

☑ Geotech Soil Boring

Property Owner City of Davenport

Site Address 6th and park

City davenport County lincoln co.

Location ne 1/4-1/4 sw 1/4 Sec 21 Twn 25 R 37 Select One ☒ EWM ☐ WWM

Lat/Long (s, t, r still REQUIRED) Lat Deg _____ Lat Min/Sec _____ Long Deg _____ Long Min/Sec _____

Tax Parcel No. _____

Cased or Uncased Diameter 7.5" Static Level _____

Work/Decommission Start Date 5-08-07

Work/Decommission Completed Date 5-08-07

Construction/Design	Well Data	Formation Description
Backfilled using holeplug 20'	B- 4 auger rig using 7.5" augers backfilled using holeplug	Gravel silt & Sand 12' Sand & Gravel 20'

RECEIVED
DEC 10 2007
DEPARTMENT OF ECOLOGY
EASTERN REGIONAL OFFICE

278835

Please print, sign and return by mail to Department of Ecology

RESOURCE PROTECTION WELL REPORT

CURRENT Notice of Intent No. SE 01689

(SUBMIT ONE WELL REPORT PER WELL INSTALLED)

Construction/Decommission *(select one)*

☒ Construction

☐ Decommission *ORIGINAL INSTALLATION Notice of Intent Number* _____

Consulting Firm GeoEngineers inc

Unique Ecology Well ID Tag No. _____

WELL CONSTRUCTION CERTIFICATION: I constructed and/or accept responsibility for construction of this well, and its compliance with all Washington well construction standards. Materials used and the information reported above are true to my best knowledge and belief.

☑ Driller ☐ Engineer ☐ Trainee Name (Print) David Thompson

Driller/Engineer /Trainee Signature _____

Driller or Trainee License No. 2493

If trainee, licensed driller's Signature and License No. 2493

Type of Well *(select one)*

☐ Resource Protection

☑ Geotech Soil Boring

Property Owner City of Davenport

Site Address 6th and park

City davenport County lincoln co.

Location ne 1/4-1/4 sw 1/4 Sec 21 Twn 25 R 37 Select One ☒ EWM ☐ WWM

Lat/Long (s, t, r still REQUIRED) Lat Deg _____ Lat Min/Sec _____ Long Deg _____ Long Min/Sec _____

Tax Parcel No. _____

Cased or Uncased Diameter 7.5" Static Level _____

Work/Decommission Start Date 5-08-07

Work/Decommission Completed Date 5-08-07

Construction/Design	Well Data	Formation Description
Backfilled using holeplug 18.5'	B-3 auger rig using 7.5" augers backfilled using holeplug	Silt 6' Clay & Sand 8' Clay Sand & Gravel 18.5' Auger Refusal

RECEIVED
DEC 05 2007
DEPARTMENT OF ECOLOGY
WELL DRILLING UNIT

DEPT OF ECOLOGY
FISCAL & BUDGET
'07 DEC -3 A8:29

RECEIVED
DEC 10 2007
DEPARTMENT OF ECOLOGY
EASTERN REGIONAL OFFICE

The Department of Ecology does NOT Warranty the Data and/or the Information on this Well Report.

278836

Please print, sign and return by mail to Department of Ecology

RESOURCE PROTECTION WELL REPORT

CURRENT Notice of Intent No. SE 01689

(SUBMIT ONE WELL REPORT PER WELL INSTALLED)

Construction/Decommission *(select one)*

- [x] Construction
- [ ] Decommission *ORIGINAL INSTALLATION Notice of Intent Number* _____

Type of Well *(select one)*

- [ ] Resource Protection
- [x] Geotech Soil Boring

Consulting Firm GeoEngineers inc

Unique Ecology Well ID Tag No. _____

Property Owner City of Davenport

Site Address 6th and park

City davenport County lincoln co.

Location ne 1/4-1/4 sw 1/4 Sec 21 Twn 25 R 37 Select One [x] EWM [ ] WWM

WELL CONSTRUCTION CERTIFICATION: I constructed and/or accept responsibility for construction of this well, and its compliance with all Washington well construction standards. Materials used and the information reported above are true to my best knowledge and belief.

Lat/Long (s, t, r still REQUIRED) Lat Deg _____ Lat Min/Sec _____ Long Deg _____ Long Min/Sec _____

[x] Driller [ ] Engineer [ ] Trainee Name (Print) David Thompson

Driller/Engineer /Trainee Signature [signature]

Driller or Trainee License No. 2493

If trainee, licensed driller's Signature and License No. 2493

Tax Parcel No. _____

Cased or Uncased Diameter 7.5" Static Level _____

Work/Decommission Start Date 5-08-07

Work/Decommission Completed Date 5-08-07

Construction/Design	Well Data	Formation Description
Backfilled using holeplug 20'	B- 4 auger rig using 7.5" augers backfilled using holeplug	Gravel silt & Sand 12' Sand & Gravel 20'

RECEIVED
DEC 10 2007
DEPARTMENT OF ECOLOGY
EASTERN REGIONAL OFFICE

The Department of Ecology does NOT Warranty the Data and/or the Information on this Well Report.

The Department of Ecology does NOT Warranty the Data and/or the Information on this Well Report.

STATE OF WASHINGTON
DEPARTMENT OF CONSERVATION
AND DEVELOPMENT

WELL LOG

No. Appli. #4690
Cert. 3677-A

Date 8-17, 1960

Record by well driller

Source driller's record

Location: State of WASHINGTON

County Lincoln

Area

Map

SE ¼ SE ¼ sec. 16 T 25 N., R. 37 ~~E~~ W.

Diagram of Section

Drilling Co. Jasper Jones

Address Davenport, Wash.

Method of Drilling Date , 19

Owner City of Davenport, Wash.

Address

Land surface, datum ft above below

Correlation	Material	Thickness (feet)	Depth (feet)
	Top soil	4	4
	Broken basalt- some dirt	22	26
	Basalt shells- water	7	33
	Broken basalt - some clay	19	52
	" " some clay & gravel	3	55
	Broken basalt- blue	12	67
	Broken shells- some broken basalt & clay hole caving	16	83
	Broken basalt-some clay	3	86
	Basalt shells-hard blue	11	97
	Gray basalt hard	8	105
	" " "	3	108
	Broken basalt some clay	8	116
	Clay & shale blue	9	125
	" " " "	5	130
	Gravel & broken basalt	23	153
	Broken basalt & shale	34	187
	" " " "	7	194

(Transcribe driller's terminology literally but paraphrase as necessary, in parentheses. If material water-bearing, so state and record static level if reported. Give depths in feet below land-surface datum unless otherwise indicated. Correlate with stratigraphic column, if feasible. Following log of materials, list all casings, perforations, screens, etc.)

Turn up (over) Sheet of sheets

The Department of Ecology does NOT Warranty the Data and/or the Information on this Well Report.

WELL LOG.—Continued No. ...../.....

Orientation	Material	Thickness (feet)	Depth (feet)
	Depth forward	——	194
	Basalt shells	9	203
	Broken basalt	8	211
	" " some shells hard & blue	11	222
	Gray basalt - hard	10	232
	Blue basalt - hard	3	235
	Clay, blue sticky	7	242
	" " & wood	8	250
	Clay blue & green- some (rotten wood) gravel	15	265
	Clay blue some large gravel- more wood	5	270
	Some clay, shale & broken basalt	14	284
	Basalt shell blue	9	293
	Broken basalt gray	3	296
	Black sandy clay	4	300
	Basalt hard	2	302
	PUMP TEST.		
	DD: 235 ft.		
	SWL: 50 ft.		

The Department of Ecology does NOT Warranty the Data and/or the Information on this Well Report.

STATE OF WASHINGTON
DEPARTMENT OF CONSERVATION
AND DEVELOPMENT

WELL LOG

No. Appli. #650
Cert. #385A

Date August, 19 48

Record by Oliver F. Zinkgrof

Source Driller record

Location: State of WASHINGTON

County Lincoln

Area

Map

NE¼ NE¼ sec. 21 T. 25 N., R. 32 E. W.

DIAGRAM OF SECTION

Drilling Co. Oliver F. Zinkgrof

Address E. 1606 Sharp Ave., Spokane 15, W

Method of Drilling Date 19

Owner City of Davenport; Washington

Address

Land surface datum ft. above / below

Correlation	Material	Thickness (feet)	Depth (feet)
	Black, broken basalt	123	123
	Grey and black basalt	133	256
	Green clay with thin layers basalt	34	290
	Black basalt	4	294
	Green shale	2	296
	Black basalt	72	368
	Crevice	1	369
	Grey and black basalt	243	612
	Blue and black basalt	68	680
	Blue and grey basalt	42	722
	Note: Static water depth about 50' to depth of hole 580'. At 692' static water 70', at 710' static water 90'. (over)		

(Transcribe driller's terminology literally but paraphrase as necessary, in parentheses. If material water-bearing, so state and record static level if reported. Give depths in feet below land-surface datum unless otherwise indicated. Correlate with stratigraphic column, if feasible. Following log of materials, list all casings, perforations, screens, etc.)

Turn up

Sheet of sheets

Disclaimer: This Well Log is 'As Is' with NO Warranty of Any Kind. Well Log

The Department of Ecology does NOT Warranty the Data and/or the Information on this Well Report.

WELL LOG.—Continued No._____/_____-_____

Correlation	Material	Thickness (feet)	Depth (feet)
	Depth forward	—	
	Pump test:		
	Dim: 722' x 16"		
	SWL: not known		
	D.D. " "		
	Yield: 350 g.p.m.		
	Casing: 16" dia. from 0 to 15'-8"		
	Perforations: none		

Department of Ecology Well Log Image System

File Original and First Copy with Department of Ecology
Second Copy — Owner's Copy
Third Copy — Driller's Copy

WATER WELL REPORT
STATE OF WASHINGTON

Start Card No. A19604
UNIQUE WELL I.D. #
Water Right Permit No.

(1) OWNER: Name Davenport City Address PO Box 26 Davenport, WA 99122

(2) LOCATION OF WELL: County Lincoln S 1/4 NE 1/4 Sec 16 T. 25 N. R. 37E W.M.

(2a) STREET ADDRESS OF WELL (or nearest address) 5 miles N of Hwy 2 and Hwy 25

(3) PROPOSED USE: ☐ Domestic ☐ Irrigation ☐ DeWater Industrial ☐ Test Well ☐ Municipal ☐ Other ☐

(4) TYPE OF WORK: Owner's number of well (if more than one)
Abandoned ☒ New well ☐ Deepened ☐ Reconditioned ☐ Method: Dug ☐ Cable ☐ Rotary ☐ Bored ☐ Driven ☐ Jetted ☐

(5) DIMENSIONS: Diameter of well 12 inches.
Drilled 300 feet. Depth of completed well ft.

(6) CONSTRUCTION DETAILS:
Casing Installed: 12" Diam. from 0 ft. to 45 ft.
Welded ☐ " Diam. from ft. to ft.
Liner installed ☐ Threaded ☐ " Diam. from ft. to ft.

Perforations: Yes ☒ No ☐
Type of perforator used Mills Knife
SIZE of perforations 1/4 in. by 3 in.
108 perforations from 18 ft. to 45 ft.
perforations from ft. to ft.
perforations from ft. to ft.

Screens: Yes ☐ No ☒
Manufacturer's Name
Type Model No.
Diam. Slot size from ft. to ft.
Diam. Slot size from ft. to ft.

Gravel packed: Yes ☐ No ☒ Size of gravel
Gravel placed from ft. to ft.

Surface seal: Yes ☐ No ☒ To what depth? ft.
Material used in seal
Did any strata contain unusable water? Yes ☐ No ☒
Type of water? Depth of strata
Method of sealing strata off

(7) PUMP: Manufacturer's Name
Type: H.P.

(8) WATER LEVELS: Land-surface elevation above mean sea level ft.
Static level 52 ft. below top of well Date 5/12/99
Artesian pressure lbs. per square inch Date
Artesian water is controlled by (Cap, valve, etc.)

(9) WELL TESTS: Drawdown is amount water level is lowered below static level
Was a pump test made? Yes ☐ No ☐ If yes, by whom?
Yield: gal./min. with ft. drawdown after hrs.
" " " "
" " " "

Recovery data (time taken as zero when pump turned off) (water level measured from well top to water level)

Time	Water Level	Time	Water Level	Time	Water Level

Date of test
Bailer test gal./min. with ft. drawdown after hrs.
Airtest gal./min. with stem set at ft. for hrs.
Artesian flow g.p.m. Date
Temperature of water Was a chemical analysis made? Yes ☐ No ☐

(10) WELL LOG or ABANDONMENT PROCEDURE DESCRIPTION

Formation: Describe by color, character, size of material and structure, and show thickness of aquifers and the kind and nature of the material in each stratum penetrated, with at least one entry for each change of information.

MATERIAL	FROM	TO
Casing was perforated		
4 perforations / ft from		
18' - 45'		
Hole was pressure grouted		
with cement slurry from		
300' to surface		

JUN 1 3 1999

Work Started 5/10/99 19. Completed 5/13/99 19

WELL CONSTRUCTOR CERTIFICATION:

I constructed and/or accept responsibility for construction of this well, and its compliance with all Washington well construction standards. Materials used and the information reported above are true to my best knowledge and belief.

NAME Fogle Pump & Supply (PERSON, FIRM, OR CORPORATION) (TYPE OR PRINT)
Address PO Box 1450 Airway Heights, WA
(Signed) Martin Jensen (WELL DRILLER) License No. 1933
Contractor's Registration No. FOGLEPS09514 Date 5/27/99 19

(USE ADDITIONAL SHEETS IF NECESSARY)

Ecology is an Equal Opportunity and Affirmative Action employer. For special accommodation needs, contact the Water Resources Program at (206) 407-6600. The TDD number is (206) 407-6006.

ECY 050-1-20 (9/93)

The Department of Ecology does NOT Warranty the Data and/or the Information on this Well Report.

The Department of Ecology does NOT Warranty the Data and/or the Information on this Well Report.

File Original and First Copy with Department of Ecology
Second Copy — Owner's Copy
Third Copy — Driller's Copy

WATER WELL REPORT
STATE OF WASHINGTON

Start Card No. A19605
UNIQUE WELL I.D. #
Water Right Permit No.

(1) OWNER: Name City of Davenport Address PO Box 26 Davenport, WA 99122

(2) LOCATION OF WELL: County Lincoln N 1/4 SW 1/4 Sec 21 T. 25 N., R. 37E W.M.

(2a) STREET ADDRESS OF WELL (or nearest address) 900 Jefferson St

(3) PROPOSED USE: ☐ Domestic ☐ Irrigation ☐ DeWater Industrial ☐ Test Well ☐ Municipal ☐ Other ☐

(4) TYPE OF WORK: Owner's number of well (if more than one)
Abandoned ☒ New well ☐ Deepened ☐ Reconditioned ☐ Method: Dug ☐ Cable ☐ Rotary ☐ Bored ☐ Driven ☐ Jetted ☐

(5) DIMENSIONS: Diameter of well 12 inches.
Drilled 480 feet. Depth of completed well ft.

(6) CONSTRUCTION DETAILS:
Casing installed: 12 " Diam. from 0 ft. to 58 ft.
Welded ☐ " Diam. from ft. to ft.
Liner installed ☐ " Diam. from ft. to ft.
Threaded ☐

Perforations: Yes ☒ No ☐
Type of perforator used Mills Knife
SIZE of perforations 1/4 in. by 3 in.
160 perforations from 18 ft. to 58 ft.
perforations from ft. to ft.
perforations from ft. to ft.

Screens: Yes ☐ No ☒
Manufacturer's Name
Type Model No.
Diam. Slot size from ft. to ft.
Diam. Slot size from ft. to ft.

Gravel packed: Yes ☐ No ☒ Size of gravel
Gravel placed from ft. to ft.

Surface seal: Yes ☐ No ☒ To what depth? ft.
Material used in seal
Did any strata contain unusable water? Yes ☐ No ☒
Type of water? Depth of strata
Method of sealing strata off

(7) PUMP: Manufacturer's Name
Type: H.P.

(8) WATER LEVELS: Land-surface elevation above mean sea level ft.
Static level 18 ft. below top of well Date 5/12/99
Artesian pressure lbs. per square inch Date
Artesian water is controlled by (Cap, valve, etc.)

(9) WELL TESTS: Drawdown is amount water level is lowered below static level
Was a pump test made? Yes ☐ No ☒ If yes, by whom?
Yield: gal./min. with ft. drawdown after hrs.

"	"	"	"
"	"	"	"

Recovery data (time taken as zero when pump turned off) (water level measured from well top to water level)

Time	Water Level	Time	Water Level	Time	Water Level

Date of test
Bailer test gal./min. with ft. drawdown after hrs.
Airlift gal./min. with stem set at ft. for hrs.
Artesian flow g.p.m. Date
Temperature of water Was a chemical analysis made? Yes ☐ No ☒

(10) WELL LOG or ABANDONMENT PROCEDURE DESCRIPTION

Formation: Describe by color, character, size of material and structure, and show thickness of aquifers and the kind and nature of the material in each stratum penetrated, with at least one entry for each change of information.

MATERIAL	FROM	TO
Casing was perforated		
4 perforation / ft. from		
18' to 58'		
Hole was pressure grouted		
with cement slurry from 480'		
to surface		
JUN 18 1999		

Work Started 5/10/99 19. Completed 5/13/99 19

WELL CONSTRUCTOR CERTIFICATION:

I constructed and/or accept responsibility for construction of this well, and its compliance with all Washington well construction standards. Materials used and the information reported above are true to my best knowledge and belief.

NAME Fogle Pump & Supply (PERSON, FIRM, OR CORPORATION) (TYPE OR PRINT)
Address PO Box 1450 Airway Heights, WA
(Signed) [signature] (WELL DRILLER) License No. 1933
Contractor's Registration No. FOGLEPS095L4 Date 5/27 19 99

(USE ADDITIONAL SHEETS IF NECESSARY)

Ecology is an Equal Opportunity and Affirmative Action employer. For special accommodation needs, contact the Water Resources Program at (206) 407-6600. The TDD number is (206) 407-6006.

ECY 050-1-20 (9/93) * * I

Appendix C DOH SYSTEM INFORMATION

Washington State Department of Health

Division of Environmental Health
Office of Drinking Water

Help

Individual System View - DAVENPORT WATER DIVISION - Water System Id - 18100

Compliance Actions | Operating Permits | Operators | Reports | Water Use Efficiency

General Information | Source Information | Samples | Exceedances | Water Quality Monitoring Schedule

Group	A	**Status**	Active	**Ownership Type**	City/Town
Type	Community	**Residential Population**	1,720	**Jurisdiction**	WA DOH ODW
County	LINCOLN	**NonResidential Population**	0	**System Effective Date**	1/1/1970
Owner Name	DAVENPORT WATER DIVISION	**Total Calculated Connections**	900	**System Inactive Date**	
Primary Contact	Fred Bell II	**Total Approved Connections**	1148	**SMA Name**	
Primary Contact Phone	(509) 725-4352	**Distribution Capacity (gallons)**	700,000	**SMA Number**	
Water System Mailing Address	PO Box 26 Davenport, WA 99122				

Home Page | Find Water Systems | Find Water Quality | Downloads/Reports

DOH Home | Community and Environment | Drinking Water Home | Drinking Water Contacts
Access Local Health | Privacy Notice | Disclaimer/Copyright Information

Links to external resources are provided as a public service and do not imply endorsement by the Washington State Department of Health

Department of Health, Office of Drinking Water

Street Address:
243 Israel Road S.E. 2nd floor
Tumwater, WA 98501

Mail:
PO BOX 47822
Olympia, WA 98504-7822

Phone: (360) 236-3100

Send inquiries about DOH and its programs to the Health Consumer Assistance Office
Comments or questions regarding this Web site? Send email to Environmental Health Application Testing and Support or call 360-236-4593.

Washington State Department of Health

Division of Environmental Health
Office of Drinking Water

Help

Individual System View - DAVENPORT WATER DIVISION - Water System Id - 18100

Compliance Actions | Operating Permits | Operators | Reports | Water Use Efficiency

General Information | Source Information | Samples | Exceedances | Water Quality Monitoring Schedule

Source 02 - Well #2

Source Status	Inactive	**Usage**	Emergency	**WRIA**	Lower Lake Roosevelt	**Intertie Supplying System**	NA
Type	Groundwater Well	**Capacity (gpm)**	200	**Township**	25	**Intertie Supplying Number**	NA
Effective Date	1/1/1970	**Treated**	No	**Range**	37E		
Inactive Date	12/8/1995	**Metered**	No	**Section**	21		
DOE Well Tag Number		**Well Depth (ft)**	500	**Qtr/Qtr Section**	NESW		

Source 04 - Well #4

Source Status	Decommissioned	**Usage**	Emergency	**WRIA**	Lower Lake Roosevelt	**Intertie Supplying System**	NA
Type	Groundwater Well	**Capacity (gpm)**	150	**Township**	25	**Intertie Supplying Number**	NA
Effective Date	1/1/1970	**Treated**	No	**Range**	37E		
Inactive Date	6/1/1990	**Metered**	Undefined	**Section**	21		
DOE Well Tag Number		**Well Depth (ft)**	300	**Qtr/Qtr Section**	NENE		

Source 03 - Well #3

Source Status	Decommissioned	**Usage**	Permanent	**WRIA**	Lower Lake Roosevelt	**Intertie Supplying System**	NA
Type	Groundwater Well	**Capacity (gpm)**	450	**Township**	25	**Intertie Supplying Number**	NA
Effective Date	1/1/1970	**Treated**	No	**Range**	37E		
Inactive Date	3/15/1993	**Metered**	Yes	**Section**	21		
DOE Well Tag Number		**Well Depth (ft)**	500	**Qtr/Qtr Section**	NENE		

Records 1 - 3 of 6

Display as table with source treatment information

Home Page | **Find Water Systems** | **Find Water Quality** | **Downloads/Reports**

DOH Home | Community and Environment| Drinking Water Home | Drinking Water Contacts
Access Local Health | Privacy Notice | Disclaimer/Copyright Information

Links to external resources are provided as a public service and do not imply endorsement by the Washington State Department of Health

Department of Health, Office of Drinking Water

Street Address:
243 Israel Road S.E. 2nd floor
Tumwater, WA 98501

Mail:
PO BOX 47822
Olympia, WA 98504-7822

Phone: (360) 236-3100

Send inquiries about DOH and its programs to the Health Consumer Assistance Office
Comments or questions regarding this Web site? Send email to Environmental Health Application Testing and Support or call 360-236-4593.

Washington State Department of Health

Division of Environmental Health
Office of Drinking Water

Help

Individual System View - DAVENPORT WATER DIVISION - Water System Id - 18100

Compliance Actions | Operating Permits | Operators | Reports | Water Use Efficiency

General Information | Source Information | Samples | Exceedances | Water Quality Monitoring Schedule

Source	DOE Source	Collect Date	Test Panel	Analyte Group	Sample Number	Lab Number	Exceedances
Dist		4/4/2016	COLI_AP	MICRO	00190	072	No
Dist		4/4/2016	COLI_AP	MICRO	00191	072	No
Dist		3/1/2016	COLI_AP	MICRO	00122	072	No
Dist		3/1/2016	COLI_AP	MICRO	00123	072	No
Dist		2/2/2016	COLI_AP	MICRO	00078	072	No
Dist		2/2/2016	COLI_AP	MICRO	00079	072	No
Dist		1/4/2016	COLI_AP	MICRO	00002	072	No
Dist		1/4/2016	COLI_AP	MICRO	00001	072	No
Dist		12/1/2015	COLI_AP	MICRO	00897	072	No
Dist		12/1/2015	COLI_AP	MICRO	00896	072	No
Dist		11/3/2015	COLI_AP	MICRO	00848	072	No
Dist		11/3/2015	COLI_AP	MICRO	00847	072	No
Dist		10/5/2015	COLI_AP	MICRO	00778	072	No
Dist		10/5/2015	COLI_AP	MICRO	00777	072	No
Dist		9/2/2015	COLI_AP	MICRO	00676	072	No
Dist		9/2/2015	COLI_AP	MICRO	00675	072	No
Dist		8/19/2015	HAA5	DBP	15382	161	No
Dist		8/19/2015	HAA5	DBP	15381	161	No
Dist		8/19/2015	HAA5	DBP	15383	161	No
Dist		8/19/2015	LCR	IOC	15379	161	No
Dist		8/19/2015	LCR	IOC	15374	161	No
Dist		8/19/2015	LCR	IOC	15375	161	No
Dist		8/19/2015	LCR	IOC	15372	161	No
Dist		8/19/2015	LCR	IOC	15378	161	No
Dist		8/19/2015	LCR	IOC	15371	161	No

Records 1 - 25 of 296

Export CSV

Links to external resources are provided as a public service and do not imply endorsement by the Washington State Department of Health

Department of Health, Office of Drinking Water

Street Address:
243 Israel Road S.E. 2nd floor
Tumwater, WA 98501

Mail:
PO BOX 47822
Olympia, WA 98504-7822

Phone: (360) 236-3100

Send inquiries about DOH and its programs to the Health Consumer Assistance Office
Comments or questions regarding this Web site? Send email to Environmental Health Application Testing and Support or call 360-236-4593.

Washington State Department of Health

Division of Environmental Health
Office of Drinking Water

Help

Individual System View - DAVENPORT WATER DIVISION - Water System Id - 18100

Compliance Actions | Operating Permits | Operators | Reports | Water Use Efficiency

General Information | Source Information | Samples | Exceedances | Water Quality Monitoring Schedule

Type	Source	DOE Source	Collect Date	Analyte	Result Quantity	Units	Test Panel	Analyte Group	Sample Number	Lab Number
MCL2	06	53G004	12/19/1989	IRON	1.27	mg/L	ICHEM	IOC	12175	051
P	Distribution		9/4/2012	TOTAL COLIFORM	Present	/100ml	COLI_AP	MICRO	00697	072
P	Distribution		10/10/2003	TOTAL COLIFORM	Present	/100ml	COLI_AP	MICRO	01104	072
P	Distribution		10/9/2003	TOTAL COLIFORM	Present	/100ml	COLI_AP	MICRO	01093	072
P	Distribution		10/7/2003	E. COLI	Present	/100ml	COLI_AP	MICRO	01049	072
P	Distribution		10/7/2003	TOTAL COLIFORM	Present	/100ml	COLI_AP	MICRO	01050	072
P	Distribution		10/7/2003	TOTAL COLIFORM	Present	/100ml	COLI_AP	MICRO	01049	072
P	Distribution		10/7/2003	TOTAL COLIFORM	Present	/100ml	COLI_AP	MICRO	01048	072
P	Distribution		10/6/2003	TOTAL COLIFORM	Present	/100ml	COLI_AP	MICRO	01043	072
P	Distribution		10/12/2000	TOTAL COLIFORM	Present	/100ml	COLI_AP	MICRO	01252	078
P	Distribution		10/10/2000	TOTAL COLIFORM	Present	/100ml	COLI_AP	MICRO	01227	072
P	Distribution		10/10/2000	TOTAL COLIFORM	Present	/100ml	COLI_AP	MICRO	01228	072
P	Distribution		10/9/2000	TOTAL COLIFORM	Present	/100ml	COLI_AP	MICRO	01215	072
P	Distribution		1/11/1999	TOTAL COLIFORM	Present	/100ml	COLI_AP	MICRO	00055	072
P	Distribution		1/7/1999	TOTAL COLIFORM	Present	/100ml	COLI_AP	MICRO	00049	072
P	Distribution		1/7/1999	TOTAL COLIFORM	Present	/100ml	COLI_AP	MICRO	00044	072
P	Distribution		1/7/1999	TOTAL COLIFORM	Present	/100ml	COLI_AP	MICRO	00046	072
P	Distribution		1/5/1999	TOTAL COLIFORM	Present	/100ml	COLI_AP	MICRO	00003	072
P	Distribution		1/5/1999	TOTAL COLIFORM	Present	/100ml	COLI_AP	MICRO	00004	072
P	Distribution		10/6/1998	TOTAL COLIFORM	Present	/100ml	COLI_AP	MICRO	01313	072
P	Distribution		10/6/1998	TOTAL COLIFORM	Present	/100ml	COLI_AP	MICRO	01314	072
P	Distribution		10/5/1998	TOTAL COLIFORM	Present	/100ml	COLI_AP	MICRO	01289	072
P	Distribution		12/10/1997	TOTAL COLIFORM	Present	/100ml	COLI_AP	MICRO	01952	072
P	Distribution		12/10/1997	TOTAL COLIFORM	Present	/100ml	COLI_AP	MICRO	01953	072
P	Distribution		12/9/1997	TOTAL	Present	/100ml	COLI_AP	MICRO	01936	072

COLIFORM

Records 1 - 25 of 32

Export CSV

Home Page | **Find Water Systems** | **Find Water Quality** | **Downloads/Reports**

DOH Home | Community and Environment| Drinking Water Home | Drinking Water Contacts
Access Local Health | Privacy Notice | Disclaimer/Copyright Information

Links to external resources are provided as a public service and do not imply endorsement by the Washington State Department of Health

Department of Health, Office of Drinking Water

Street Address:
243 Israel Road S.E. 2nd floor
Tumwater, WA 98501

Mail:
PO BOX 47822
Olympia, WA 98504-7822

Phone: (360) 236-3100

Send inquiries about DOH and its programs to the Health Consumer Assistance Office
Comments or questions regarding this Web site? Send email to Environmental Health Application Testing and Support or call 360-236-4593.

Washington State Department of Health

Division of Environmental Health
Office of Drinking Water

Help

Individual System View - DAVENPORT WATER DIVISION - Water System Id - 18100

Compliance Actions	Operating Permits	Operators	Reports	Water Use Efficiency
General Information	Source Information	Samples	Exceedances	Water Quality Monitoring Schedule

WQMS Report

Links to external resources are provided as a public service and do not imply endorsement by the Washington State Department of Health

Department of Health, Office of Drinking Water

Street Address:
243 Israel Road S.E. 2nd floor
Tumwater, WA 98501

Mail:
PO BOX 47822
Olympia, WA 98504-7822

Phone: (360) 236-3100

Send inquiries about DOH and its programs to the Health Consumer Assistance Office
Comments or questions regarding this Web site? Send email to Environmental Health Application Testing and Support or call 360-236-4593.

Water Quality Monitoring Schedule

System: DAVENPORT WATER DIVISION
Contact: Fred Bell II

PWS ID: 18100 N
Group: A - Comm

Region: EASTERN
County: LINCOLN

NOTE: To receive credit for compliance samples, you must fill out laboratory and sample paperwork completely, send your samples to a laboratory accredited by Washington State to conduct the analyses, AND ensure the results are submitted to DOH Office of Drinking Water. There is often a lag time between when you collect your sample, when we credit your system with meeting the monitoring requirement, and when we generate the new monitoring requirement.

Coliform Monitoring Requirements

	May 2016	Jun 2016	Jul 2016	Aug 2016	Sep 2016	Oct 2016	Nov 2016	Dec 2016	Jan 2017	Feb 2017	Mar 2017	Apr 2017
Coliform Monitoring Population	1720	1720	1720	1720	1720	1720	1720	1720	1720	1720	1720	1720
Number of Routine Samples Required	2	2	2	2	2	2	2	2	2	2	2	2

- Collect samples from representative points throughout the distribution system.
- Collect required repeat samples following an unsatisfactory sample. In addition, collect a sample from each operating groundwater source.
- For systems that chlorinate, record chlorine residual (measured when the coliform sample is collected) on the coliform lab slip.

Chemical Monitoring Requirements

Distribution Monitoring

Test Panel/Analyte	*# Samples Required*	*Compliance Period*	*Frequency*	*Last Sample Date*	*Next Sample Due*
Lead and Copper	10	Jan 2016 - Dec 2018	standard - 3 year	08/19/2015	Aug 2018
Asbestos	0	Jan 2011 - Dec 2019	waiver - 9 year	04/19/2010	Apr 2019
Total Trihalomethane (THM)	1	Jan 2016 - Dec 2016	reduced - 1 year	08/19/2015	***Aug 2016***
Halo-Acetic Acids (HAA5)	1	Jan 2016 - Dec 2016	reduced - 1 year	08/19/2015	***Aug 2016***

Water Quality Monitoring Schedule

Notes on Distribution System Chemical Monitoring

For *Lead and Copper*:
- Collect samples from the COLD WATER side of a KITCHEN or BATHROOM faucet that is used daily.
- Before sampling, make sure the water has sat unused in the pipes for at least 6 hours, but no more than 12 hours (e.g. overnight).
- If you are sampling from a faucet that has hot water, make sure cold water is the last water to run through the faucet before it sits overnight.
- If your sampling frequency is annual or every 3 years, collect samples between June 1 and September 30.

For *Asbestos:* Collect the sample from one of your routine coliform sampling sites in an area of your distribution system that has asbestos concrete pipe.

For *Disinfection Byproducts (HAA5 and THM):* Collect the samples at the locations identified in your Disinfection Byproducts (DBP) monitoring plan.

Source Monitoring

- Collect 'source' chemical monitoring samples from a tap after all treatment (if any), but before entering the distribution system.
- Washington State grants monitoring waivers for various test panels /analytes. Please note that we may require some monitoring as a condition of some waivers. We have granted complete waivers for dioxin, endothal, glyphosate, diquat, and insecticides.

Water Quality Monitoring Schedule

Source S06	*Well #6 - ABR081*	*Well*	*Use - Permanent*	*Susceptility - Moderate*	
Test Panel/Analyte	*# Samples Required*	*Compliance Period*	*Frequency*	*Last Sample Date*	*Next Sample Due*
Nitrate	1	Jan 2016 - Dec 2016	standard - 1 year	04/08/2015	***Apr 2016***
Complete Inorganic (IOC)	1	Jan 2011 - Dec 2019	waiver - 9 year		Apr 2019
Volatile Organics (VOC)	1	Jan 2014 - Dec 2019	waiver - 6 year	04/20/2010	***Apr 2016***
Herbicides	1	Jan 2014 - Dec 2022	waiver - 9 year	04/20/2010	Apr 2019
Pesticides	0	Jan 2014 - Dec 2016	waiver - 3 year	03/24/2015	
Soil Fumigants	0	Jan 2014 - Dec 2016	waiver - 3 year		
Gross Alpha	1	Jan 2014 - Dec 2019	standard - 6 year	04/19/2010	***Apr 2016***
Radium 228	1	Jan 2014 - Dec 2019	standard - 6 year	04/19/2010	***Apr 2016***

Source S07	*Well #7 - ABJ061*	*Well*	*Use - Permanent*	*Susceptility - Low*	
Test Panel/Analyte	*# Samples Required*	*Compliance Period*	*Frequency*	*Last Sample Date*	*Next Sample Due*
Nitrate	1	Jan 2016 - Dec 2016	standard - 1 year	04/08/2015	***Apr 2016***
Complete Inorganic (IOC)	1	Jan 2011 - Dec 2019	waiver - 9 year		Apr 2019
Volatile Organics (VOC)	1	Jan 2014 - Dec 2019	waiver - 6 year	04/20/2010	***Apr 2016***
Herbicides	1	Jan 2014 - Dec 2022	waiver - 9 year	04/20/2010	Apr 2019
Pesticides	0	Jan 2014 - Dec 2016	waiver - 3 year	03/24/2015	
Soil Fumigants	0	Jan 2014 - Dec 2016	waiver - 3 year		
Gross Alpha	1	Jan 2014 - Dec 2019	standard - 6 year	04/19/2010	***Apr 2016***
Radium 228	1	Jan 2014 - Dec 2019	standard - 6 year	04/19/2010	***Apr 2016***

Water Quality Monitoring Schedule

Other Information

Other Reporting Schedules	Due Date
Measure chlorine residuals and submit monthly reports if your system uses continuous chlorination:	monthly
Submit Consumer Confidence Report (CCR) to customers and ODW (Community systems only):	07/01/2016
Submit CCR certification form to ODW (Community systems only):	10/01/2016
Submit Water Use Efficiency report online to ODW (Community and other municipal water systems only):	07/01/2016
Send notices of lead and copper sample results to the customers sampled:	10 days after you receive the laboratory results
Submit Certification of customer notification of lead and copper results to ODW:	60 days after you notify customers

Special Notes

None

Eastern Regional Water Quality Monitoring Contacts

For questions regarding chemical monitoring:	Stan Hoffman: (509) 329-2132: or Stan.Hoffman@doh.wa.gov
For questions regarding DBPs:	Stan Hoffman: (509) 329-2132 or Stan.Hoffman@doh.wa.gov
For questions regarding coliform bacteria and microbial issues:	Mark Steward: (509) 329-2134 or Mark.Steward@doh.wa.gov

Additional Notes

The information on this monitoring schedule is valid as of the date in the upper left corner on the first page. However, the information may change with subsequent updates in our water quality monitoring database as we receive new data or revise monitoring schedules. There is often a lag time between when you collect your sample and when we credit your system with meeting the monitoring requirement.

We have not designed this monitoring schedule to display all compliance requirements. The purpose of this schedule is to assist water systems with planning for most water quality monitoring, and to allow systems to compare their records with DOH ODW records. Please be aware that this monitoring schedule does not include constituents that require a special monitoring frequency, such as monitoring affiliated with treatment.

Any inaccuracies on this schedule will not relieve the water system owner and operator of the requirement to comply with applicable regulations.

If you have any questions about your monitoring requirements, please contact the regional office staff listed above.

Washington State Department of Health

Division of Environmental Health
Office of Drinking Water

Help

Individual System View - DAVENPORT WATER DIVISION - Water System Id - 18100

Compliance Actions | Operating Permits | Operators | Reports | Water Use Efficiency

General Information | Source Information | Samples | Exceedances | Water Quality Monitoring Schedule

Type	Issue Date	Status	Reason

No Active Compliance Action At This Time.

Links to external resources are provided as a public service and do not imply endorsement by the Washington State Department of Health

Department of Health, Office of Drinking Water

Street Address:
243 Israel Road S.E. 2nd floor
Tumwater, WA 98501

Mail:
PO BOX 47822
Olympia, WA 98504-7822

Phone: (360) 236-3100

Send inquiries about DOH and its programs to the Health Consumer Assistance Office
Comments or questions regarding this Web site? Send email to Environmental Health Application Testing and Support or call 360-236-4593.

Washington State Department of Health

Division of Environmental Health
Office of Drinking Water

Help

Individual System View - DAVENPORT WATER DIVISION - Water System Id - 18100

Compliance Actions | Operating Permits | Operators | Reports | Water Use Efficiency

General Information | Source Information | Samples | Exceedances | Water Quality Monitoring Schedule

Last Permit Color Issued: Green Last Permit Issued Date: 6/1/2016

Last Permit Issued Definition: Green: Systems in this category are considered adequate for existing uses and adding new service connections up to the number of approved service connections.

Current Color: Green Current Color is what the calculated permit color would be based on information as of 5/5 /2016

Current Color Definition: Green: Systems in this category are considered adequate for existing uses and adding new service connections up to the number of approved service connections.

Override Comments:

Current Permit Conditions:

Links to external resources are provided as a public service and do not imply endorsement by the Washington State Department of Health

Department of Health, Office of Drinking Water

Street Address:
243 Israel Road S.E. 2nd floor
Tumwater, WA 98501

Mail:
PO BOX 47822
Olympia, WA 98504-7822

Phone: (360) 236-3100

Send inquiries about DOH and its programs to the Health Consumer Assistance Office
Comments or questions regarding this Web site? Send email to Environmental Health Application Testing and Support or call 360-236-4593.

Washington State Department of Health

Division of Environmental Health
Office of Drinking Water

Help

Individual System View - DAVENPORT WATER DIVISION - Water System Id - 18100

Compliance Actions | Operating Permits | Operators | Reports | Water Use Efficiency

General Information | Source Information | Samples | Exceedances | Water Quality Monitoring Schedule

Operator Name	Operator Number	Position Number	Certification Level Required	Certification Type
Fred Bell	003706	1	Water Distribution Manager 2	Contract
Joel Anderson	010557			

Records 1 - 2 of 2

Export CSV

Home Page | Find Water Systems | Find Water Quality | Downloads/Reports

DOH Home | Community and Environment| Drinking Water Home | Drinking Water Contacts
Access Local Health | Privacy Notice | Disclaimer/Copyright Information

Links to external resources are provided as a public service and do not imply endorsement by the Washington State Department of Health

Department of Health, Office of Drinking Water

Street Address:
243 Israel Road S.E. 2nd floor
Tumwater, WA 98501

Mail:
PO BOX 47822
Olympia, WA 98504-7822

Phone: (360) 236-3100

Send inquiries about DOH and its programs to the Health Consumer Assistance Office
Comments or questions regarding this Web site? Send email to Environmental Health Application Testing and Support or call 360-236-4593.

Washington State Department of Health

Division of Environmental Health
Office of Drinking Water

Help

Individual System View - DAVENPORT WATER DIVISION - Water System Id - 18100

Compliance Actions | Operating Permits | Operators | Reports | Water Use Efficiency

General Information | Source Information | Samples | Exceedances | Water Quality Monitoring Schedule

Pre-Adequacy Summary Report
Water Facilities Inventory Report (WFI)

Home Page | **Find Water Systems** | **Find Water Quality** | **Downloads/Reports**

DOH Home | Community and Environment| Drinking Water Home | Drinking Water Contacts
Access Local Health | Privacy Notice | Disclaimer/Copyright Information

Links to external resources are provided as a public service and do not imply endorsement by the Washington State Department of Health

Department of Health, Office of Drinking Water

Street Address:
243 Israel Road S.E. 2nd floor
Tumwater, WA 98501

Mail:
PO BOX 47822
Olympia, WA 98504-7822

Phone: (360) 236-3100

Send inquiries about DOH and its programs to the Health Consumer Assistance Office
Comments or questions regarding this Web site? Send email to Environmental Health Application Testing and Support or call 360-236-4593.

Pre - Adequacy Data Summary
As of: 5/11/2016

Report Date: 5/11/2016

Administrative Data

"Mailing Information:"
DAVENPORT WATER DIVISION , 18100

Fred Bell II
(509) 725-4352
PO Box 26
Davenport, WA 99122

Last WFI Update:3/2/2016
Group.....: A

Type.....: Comm
DOH Region.....: Eastern
County.....: LINCOLN

Connections:

Active Connections.....: 900

Approved Connections.: See approved numbers - 1148

Ownership:
Owner Type..: Muni
Owner Name.: DAVENPORT, CITY OF

Pre - Adequacy Data Summary
As of: 5/11/2016

Operating Permit Description

Current and Valid Operating Permit (Yes/No) - Yes

Permit Category Color.: Green
DOH Recommendation:

Green: Systems in this category are considered adequate for existing uses and new service connections up to the number of approved service connections.

Water Quality Violations

Incident Date	Severity

*** No Current Violation Found for Water System ***

Operator Certification Requirement

In Compliance

Water System Plan Requirement

Not Required

Compliance Actions

Action	Status	Issue Date	Reason

*** No Current Compliance Actions Found ***

Regional Staff Comments

Disclaimer

This is a DOH Pre - Adequacy Data Summary for this water system that is based on information available at this time. Other entities such as Local Building, Planning and Health Jurisdictions, or financial institutions have alternative authority to make final decisions involving development, building permits and financing.

**** End of Report ****

Washington State Department of Health
Division of Environmental Health
Office of Drinking Water

WATER FACILITIES INVENTORY (WFI) FORM

ONE FORM PER SYSTEM

Quarter: 1
Updated: 03/02/2016
Printed: 5/11/2016
WFI Printed For: On-Demand
Submission Reason: No Change

RETURN TO: Central Services - WFI, PO Box 47822, Olympia, WA, 98504-7822

1. SYSTEM ID NO.	2. SYSTEM NAME	3. COUNTY	4. GROUP	5. TYPE
18100 N	DAVENPORT WATER DIVISION	LINCOLN	A	Comm

6. PRIMARY CONTACT NAME & MAILING ADDRESS

FRED BELL II [FOREMAN]
PO BOX 26
DAVENPORT, WA 99122

7. OWNER NAME & MAILING ADDRESS — **8. OWNER NUMBER: 001412**

DAVENPORT, CITY OF
FRED BELL II FOREMAN
PO BOX 26
DAVENPORT, WA 99122-0026

STREET ADDRESS IF DIFFERENT FROM ABOVE

ATTN
ADDRESS 411 MORGAN ST
CITY DAVENPORT STATE WA ZIP 99122

STREET ADDRESS IF DIFFERENT FROM ABOVE

ATTN
ADDRESS 411 MORGAN ST
CITY DAVENPORT STATE WA ZIP 99122

9. 24 HOUR PRIMARY CONTACT INFORMATION

Primary Contact Daytime Phone: (509) 725-4352
Primary Contact Mobile/Cell Phone: (509) 721-0069
Primary Contact Evening Phone: (xxx)-xxx-xxxx
Fax: (509) 725-4300 E-mail: xxxxxxxxxxxxxxxxxxxx

10. OWNER CONTACT INFORMATION

Owner Daytime Phone: (509) 725-4352
Owner Mobile/Cell Phone: (509) 721-0069
Owner Evening Phone: (xxx)-xxx-xxxx
Fax: (509) 725-4300 E-mail: xxxxxxxxxxxxxxxxxxxx

WAC 246-290-420(9) requires that water systems provide 24-hour contact information for emergencies.

11. SATELLITE MANAGEMENT AGENCY - SMA (check only one)

- [x] Not applicable (Skip to #12)
- [ ] Owned and Managed
- [ ] Managed Only
- [ ] Owned Only

SMA NAME: _____ SMA Number:

12. WATER SYSTEM CHARACTERISTICS (mark all that apply)

- [x] Agricultural
- [x] Commercial / Business
- [x] Day Care
- [ ] Food Service/Food Permit
- [ ] 1,000 or more person event for 2 or more days per year
- [x] Hospital/Clinic
- [ ] Industrial
- [x] Licensed Residential Facility
- [x] Lodging
- [x] Recreational / RV Park
- [x] Residential
- [x] School
- [ ] Temporary Farm Worker
- [x] Other (church, fire station, etc.): _____

13. WATER SYSTEM OWNERSHIP (mark only one)

- [ ] Association
- [x] City / Town
- [ ] County
- [ ] Federal
- [ ] Investor
- [ ] Private
- [ ] Special District
- [ ] State

14. STORAGE CAPACITY (gallons)

700,000

15	16	17	18										19			20	21						22	23	24			
	SOURCE NAME	INTERTIE	SOURCE CATEGORY										USE				TREATMENT						DEPTH		SOURCE LOCATION			
Source Number	LIST UTILITY'S NAME FOR SOURCE AND WELL TAG ID NUMBER. Example: WELL #1 XYZ456 IF SOURCE IS PURCHASED OR INTERTIED, LIST SELLER'S NAME Example: SEATTLE	INTERTIE SYSTEM ID NUMBER	WELL	WELL FIELD	WELL IN A WELL FIELD	SPRING	SPRING FIELD	SPRING IN SPRINGFIELD	SEA WATER	SURFACE WATER	RANNEY / INF. GALLERY	OTHER	PERMANENT	SEASONAL	EMERGENCY	SOURCE METERED	NONE	CHLORINATION	FILTRATION	FLUORIDATION	IRRADIATION (UV)	OTHER	DEPTH TO FIRST OPEN INTERVAL IN FEET	CAPACITY (GALLONS PER MINUTE)	1/4, 1/4 SECTION	SECTION NUMBER	TOWNSHIP	RANGE
S02	InAct 12/08/1995 Well #2		X												X	N	X						500	200	NE SW	21	25N	37E
S06	Well #6 - ABR081		X										X			Y		X					1000	1600	NE SW	21	25N	37E
S07	Well #7 - ABJ061		X										X			Y		X					959	1050	NE NE	21	25N	37E

WATER FACILITIES INVENTORY (WFI) FORM - Continued

1. SYSTEM ID NO.	2. SYSTEM NAME	3. COUNTY	4. GROUP	5. TYPE
18100 N	DAVENPORT WATER DIVISION	LINCOLN	A	Comm

	ACTIVE SERVICE CONNECTIONS	DOH USE ONLY! CALCULATED ACTIVE CONNECTIONS	DOH USE ONLY! APPROVED CONNECTIONS
25. SINGLE FAMILY RESIDENCES (How many of the following do you have?)		752	1148
A. Full Time Single Family Residences (Occupied 180 days or more per year)	646		
B. Part Time Single Family Residences (Occupied less than 180 days per year)	0		
26. MULTI-FAMILY RESIDENTIAL BUILDINGS (How many of the following do you have?)			
A. Apartment Buildings, condos, duplexes, barracks, dorms	20		
B. Full Time Residential Units in the Apartments, Condos, Duplexes, Dorms that are occupied more than 180 days/year	106		
C. Part Time Residential Units in the Apartments, Condos, Duplexes, Dorms that are occupied less than 180 days/year	0		
27. NON-RESIDENTIAL CONNECTIONS (How many of the following do you have?)			
A. Recreational Services and/or Transient Accommodations (Campsites, RV sites, hotel/motel/overnight units)	0	0	0
B. Institutional, Commercial/Business, School, Day Care, Industrial Services, etc.	148	148	0
28. TOTAL SERVICE CONNECTIONS		900	1148

29. FULL-TIME RESIDENTIAL POPULATION

A. How many residents are served by this system 180 or more days per year? 1720

30. PART-TIME RESIDENTIAL POPULATION	JAN	FEB	MAR	APR	MAY	JUN	JUL	AUG	SEP	OCT	NOV	DEC
A. How many part-time residents are present each month?												
B. How many days per month are they present?												

31. TEMPORARY & TRANSIENT USERS	JAN	FEB	MAR	APR	MAY	JUN	JUL	AUG	SEP	OCT	NOV	DEC
A. How many total visitors, attendees, travelers, campers, patients or customers have access to the water system each month?												
B. How many days per month is water accessible to the public?												

32. REGULAR NON-RESIDENTIAL USERS	JAN	FEB	MAR	APR	MAY	JUN	JUL	AUG	SEP	OCT	NOV	DEC
A. If you have schools, daycares, or businesses connected to your water system, how many students daycare children and/or employees are present each month?												
B. How many days per month are they present?												

33. ROUTINE COLIFORM SCHEDULE	JAN	FEB	MAR	APR	MAY	JUN	JUL	AUG	SEP	OCT	NOV	DEC
* Requirement is exception from WAC 246-290	2	2	2	2	2	2	2	2	2	2	2	2

34. NITRATE SCHEDULE	QUARTERLY	ANNUALLY	ONCE EVERY 3 YEARS
(One Sample per source by time period)			

35. Reason for Submitting WFI:

☐ Update - Change ☐ Update - No Change ☐ Inactivate ☐ Re-Activate ☐ Name Change ☐ New System ☐ Other _____

36. I certify that the information stated on this WFI form is correct to the best of my knowledge.

SIGNATURE: _____ **DATE:** _____

PRINT NAME: _____ **TITLE:** _____

Washington State Department of Health

Division of Environmental Health
Office of Drinking Water

Help

Individual System View - DAVENPORT WATER DIVISION - Water System Id - 18100

Submit Your Annual WUE Report Now

Report History

For a copy of WUE Reports from 2007 and 2008, contact the Department of Health.

- 2014 Report, Submitted 6/29/2015
- 2013 Report, Submitted 6/24/2014
- 2012 Report, Submitted 6/18/2013
- 2011 Report, Submitted 6/25/2012
- 2010 Report, Submitted 6/2/2011

Links to external resources are provided as a public service and do not imply endorsement by the Washington State Department of Health

Department of Health, Office of Drinking Water

Street Address:
243 Israel Road S.E. 2nd floor
Tumwater, WA 98501

Mail:
PO BOX 47822
Olympia, WA 98504-7822

Phone: (360) 236-3100

Send inquiries about DOH and its programs to the Health Consumer Assistance Office
Comments or questions regarding this Web site? Send email to Environmental Health Application Testing and Support or call 360-236-4593.

WS ID	WS Name
18100	DAVENPORT WATER DIVISION

Total WFI Printed: 1

Washington State Department of Health
Division of Environmental Health
Office of Drinking Water

Date Submitted: 6/29/2015

Water Use Efficiency
Annual Performance Report - 2014

WS Name: DAVENPORT WATER DIVISION Water System ID# : 18100 WS County: LINCOLN

Report submitted by: *Fred Bell*

Meter Installation Information:

Estimate the percentage of metered connections: *100%*

If not fully metered - Current status of meter installation:

Production, Authorized Consumption, and Distribution System Leakage Information:

12-Month WUE Reporting Period: *01/01/2014* To *12/31/2014*

Incomplete or missing data for the year? *No*

If yes, explain:

Distribution System Leakage Summary:

Total Water Produced and Purchased (TP) – Annual Volume	*174,800* gallons
Authorized Consumption (AC) – Annual Volume	*129,700* gallons
Distribution System Leakage – Annual Volume TP – AC	*45,100* gallons
Distribution System Leakage – Percent DSL = [(TP – AC) / TP] x 100	*25.8 %*
3-year annual average	*26.5 %*

Goal-Setting Information:

Date of Most Recent Public Forum: *06/14/2010* Has goal been changed since last performance report? *No*

Note: Customer goal must be re-established every 6 years through a public process

WUE Goals:

Customer Goal (Demand Side):

The City of Davenport's WUE goals include instituting tiered rates for customers, and implementing landscaping that reduces water consumption, and providing information to users regarding water saving measures.The City will continue to encourage the use of low flow devices(i.e.showers,toilets) and provide conservation information with monthly water bills to customers. The City plans to reveiw the conservation measures in place to evaluate where progress has been made and where shortfalls exist.

Describe Progress in Reaching Goals:

Customer (Demand Side) Goal Progress:

The City of Davenport's WUE goals include instituting tiered rates for customers, and implementing landscaping that reduces water consumption, and providing information to users regarding water saving measures. The City will continue to encourage the use of low flow devices (i.e.(showers,toilets)and provide conservation information with the monthly water bills to customers. The City plans to review the conservation measures in place to evaluate where progress has made and where shortfalls exist.

Additional Information Regarding Supply and Demand Side WUE Efforts

Include any other information that describes how you and your customers use water efficiently:

we have decreased a small percentage by repairing leaks and finding leaks on the customer side with the leak detection on the radio read meters that we are installing. we are continuing to repair and install new meters as time and money allows along with leak detection.

Do not mail, fax, or email this report to DOH

Washington State Department of Health
Division of Environmental Health
Office of Drinking Water

Date Submitted: 6/24/2014

Water Use Efficiency
Annual Performance Report - 2013

WS Name: DAVENPORT WATER DIVISION Water System ID# : 18100 WS County: LINCOLN

Report submitted by: *Fred Bell*

Meter Installation Information:

Estimate the percentage of metered connections: *100%*

If not fully metered - Current status of meter installation:

Production, Authorized Consumption, and Distribution System Leakage Information:

12-Month WUE Reporting Period: *10/26/2012* To *10/25/2013*

Incomplete or missing data for the year? *No*

If yes, explain:

Distribution System Leakage Summary:

Total Water Produced and Purchased (TP) – Annual Volume	*161,925* gallons
Authorized Consumption (AC) – Annual Volume	*121,632* gallons
Distribution System Leakage – Annual Volume TP – AC	*40,293* gallons
Distribution System Leakage – Percent DSL = [(TP – AC) / TP] x 100	*24.9 %*
3-year annual average	*25.4 %*

Goal-Setting Information:

Date of Most Recent Public Forum: *06/14/2010* Has goal been changed since last performance report? *No*

Note: Customer goal must be re-established every 6 years through a public process

WUE Goals:

Customer Goal (Demand Side):

The City of Davenport's WUE goals include instituting tiered rates for customers, and implementing landscaping that reduces water consumption, and providing information to users regarding water saving measures.The City will continue to encourage the use of low flow devices(i.e.showers,toilets) and provide conservation information with monthly water bills to customers. The City plans to reveiw the conservation measures in place to evaluate where progress has been made and where shortfalls exist.

Describe Progress in Reaching Goals:

Customer (Demand Side) Goal Progress:

Additional Information Regarding Supply and Demand Side WUE Efforts

Include any other information that describes how you and your customers use water efficiently:

We have conducted a water audit provided by Evergreen Rural Water and under our Water System Plan 6.3 which covers the City's Water Loss Control Action Plan

Do not mail, fax, or email this report to DOH

Washington State Department of Health
Division of Environmental Health
Office of Drinking Water

Date Submitted: 6/18/2013

Water Use Efficiency
Annual Performance Report - 2012

WS Name: DAVENPORT WATER DIVISION Water System ID# : 18100 WS County: LINCOLN

Report submitted by: *fred bell*

Meter Installation Information:

Estimate the percentage of metered connections: *100%*

If not fully metered - Current status of meter installation:

Production, Authorized Consumption, and Distribution System Leakage Information:

12-Month WUE Reporting Period: *11/01/2011* To *11/01/2012*

Incomplete or missing data for the year? *No*

If yes, explain:

Distribution System Leakage Summary:

Total Water Produced and Purchased (TP) – Annual Volume	*166,690,973* gallons
Authorized Consumption (AC) – Annual Volume	*118,757,835* gallons
Distribution System Leakage – Annual Volume TP – AC	*47,933,138* gallons
Distribution System Leakage – Percent DSL = [(TP – AC) / TP] x 100	*28.8 %*
3-year annual average	*26.7 %*

Goal-Setting Information:

Date of Most Recent Public Forum: *06/14/2010* Has goal been changed since last performance report? *No*

Note: Customer goal must be re-established every 6 years through a public process

WUE Goals:

Customer Goal (Demand Side):

The City of Davenport's WUE goals include instituting tiered rates for customers, and implementing landscaping that reduces water consumption, and providing information to users regarding water saving measures.The City will continue to encourage the use of low flow devices(i.e.showers,toilets) and provide conservation information with monthly water bills to customers. The City plans to reveiw the conservation measures in place to evaluate where progress has been made and where shortfalls exist.

Describe Progress in Reaching Goals:

Customer (Demand Side) Goal Progress:

I think customer goals are being met

Additional Information Regarding Supply and Demand Side WUE Efforts

Include any other information that describes how you and your customers use water efficiently:

we are trying to replace aging service and main lines each year, as you can see the water loss is up from last year, this year we have replave 700' of 4" CI lead joint pipe and one 1 1/2 service line that was broken before the meter, we also have repaired several leaks on a 6' CI lead joint main. We will also be conducting more leak detection threw Utility Services Associates of Burien, Washington

Do not mail, fax, or email this report to DOH

Washington State Department of Health
Division of Environmental Health
Office of Drinking Water

Date Submitted: 6/25/2012

Water Use Efficiency
Annual Performance Report - 2011

WS Name: DAVENPORT WATER DIVISION Water System ID# : 18100 WS County: LINCOLN

Report submitted by: *Fred Bell*

Meter Installation Information:

Estimate the percentage of metered connections: *100%*

If not fully metered - Current status of meter installation:

Production, Authorized Consumption, and Distribution System Leakage Information:

12-Month WUE Reporting Period: *11/01/2010* To *10/31/2011*

Incomplete or missing data for the year? *No*

If yes, explain:

Distribution System Leakage Summary:

Total Water Produced and Purchased (TP) – Annual Volume	*157,654,629* gallons
Authorized Consumption (AC) – Annual Volume	*122,087,928* gallons
Distribution System Leakage – Annual Volume TP – AC	*35,566,701* gallons
Distribution System Leakage – Percent DSL = [(TP – AC) / TP] x 100	*22.6 %*
3-year annual average	*23.6 %*

Goal-Setting Information:

Date of Most Recent Public Forum: *06/14/2010* Has goal been changed since last performance report? *No*

Note: Customer goal must be re-established every 6 years through a public process

WUE Goals:

Customer Goal (Demand Side):

The City of Davenport's WUE goals include instituting tiered rates for customers, and implementing landscaping that reduces water consumption, and providing information to users regarding water saving measures.The City will continue to encourage the use of low flow devices(i.e.showers,toilets) and provide conservation information with monthly water bills to customers. The City plans to reveiw the conservation measures in place to evaluate where progress has been made and where shortfalls exist.

Describe Progress in Reaching Goals:

Customer (Demand Side) Goal Progress:

The City of Davenport decreased water consumption and improved water use efficiency between 2010 and 2011. Total water produced was decreased by 10,596,001 gallons and decreased the distribution system leakage by 12,573,064 gallons between 2010 and 2011.Progress towards the WUE goals has been made by the City's work to repair and replace meters and water mains as resources are available as well as efforts by the community to reduce the overall consumption.

Additional Information Regarding Supply and Demand Side WUE Efforts

Include any other information that describes how you and your customers use water efficiently:

Supply and demand side WUE efforts include on-going leak detection and main line replacements. The City has continued to replace all direct read meters with radio read meters so a higher percentage of meters are read monthly.

Do not mail, fax, or email this report to DOH

Washington State Department of Health
Division of Environmental Health
Office of Drinking Water

Date Submitted: 6/2/2011

Water Use Efficiency
Annual Performance Report - 2010

WS Name: DAVENPORT WATER DIVISION Water System ID# : 18100 WS County: LINCOLN

Report submitted by: *fred bell*

Meter Installation Information:

Is your water system fully metered? *Yes*

If not fully metered - Current status of meter installation:

Production, Authorized Consumption, and Distribution System Leakage Information:

12-Month WUE Reporting Period: *11/01/2009* To *11/01/2010*

Incomplete or missing data for the year? *No*

If yes, explain:

Distribution System Leakage Summary:

Total Water Produced and Purchased (TP) – Annual Volume	*168,250,630* gallons
Authorized Consumption (AC) – Annual Volume	*120,110,865* gallons
Distribution System Leakage – Annual Volume TP – AC	*48,139,765* gallons
Distribution System Leakage – Percent DSL = [(TP – AC) / TP] x 100	*28.6 %*
3-year annual average	*23.7 %*

Goal-Setting Information:

Date of Most Recent Public Forum: *06/14/2010* Has goal been changed since last performance report? *No*

Note: Customer goal must be re-established every 6 years through a public process

WUE Goals:

Customer Goal (Demand Side):

institute tiered rates for customers, landscaping that reduces consumption, information regarding waater saving measures

Describe Progress in Reaching Goals:

Customer (Demand Side) Goal Progress:

not sure at this time, have not gotten enough data to support savings

Additional Information Regarding Supply and Demand Side WUE Efforts

Include any other information that describes how you and your customers use water efficiently:

on going leak detection, on going main line replacement, replace all meters with radio read meters so we can read every month, and continued education for users on leakage and use within there property.

Do not mail, fax, or email this report to DOH

Appendix D CITY PROVIDED INFORMATION

Chapter 13.04

WATER SUPPLY SYSTEM[1]

Sections:

13.04.010 Generally.
13.04.020 Application for use.
13.04.030 Use outside city limits.
13.04.040 Responsibility for cost of infrastructure for undeveloped platted and replatted areas.
13.04.050 Water meters.
13.04.060 New meters – Connection fees.
13.04.065 Accounts.
13.04.070 Deposit of water connection charges.
13.04.090 Replacement meters.
13.04.100 Check of meter accuracy.
13.04.110 Service pipe – Placement.
13.04.120 Service pipe – Replacement.
13.04.130 Owner care of service pipe.
13.04.140 Stop-and-waste cock.
13.04.150 Connection.
13.04.160 Access for inspection.
13.04.170 Pipe laying procedure – Construction cost liability.
13.04.190 Shutoff for repair.
13.04.200 Equipment damage – Excessive water use.
13.04.210 City not responsible for certain conditions.
13.04.220 Hose shut off during fire alarm.
13.04.230 Prohibited hydrant and water uses.
13.04.240 Shortage of water – City preference.
13.04.250 Limitations on water use.
13.04.260 Payment procedure.
13.04.270 Rate schedule.
13.04.280 Business and occupation tax – Imposed.
13.04.290 Business and occupation tax – Transfer to current fund.
13.04.300 Charge revisions.
13.04.310 Obligation of landowners (real property owners).
13.04.320 Shut off for noncompliance.
13.04.330 Lien enforcement.
13.04.340 Penalty for violations.
13.04.350 Bad check fees.

1. For statutory provisions that all cities shall have power to provide for the water supply thereof, and to establish, construct and maintain a system water supply within or without the corporate limits and to control, regulate and manage the same, see RCW 35.21.210.

13.04.010 Generally.

The following provisions in this chapter are rules and regulations governing the use of water from the city water system. (Ord. 507 § 1, 1979).

13.04.020 Application for use.

Application for the use of water must be made by the owner or agent of the property on or for which the water is to be used and on printed forms to be furnished at the office of the city clerk-treasurer, and the application must state fully and truly all purposes for which the water may be required and must bind the applicant to conform to the rules and regulations as a condition for the use of the water. No person or persons, supplied with water from the city mains will be entitled to use it for any other purpose than for that which he has applied, nor to supply, in any way, other persons or families. An application fee of $5.00 shall be paid at the time application is made. Should the applicant desire a change of service, an additional service fixture, or to apply the water for purposes other than those stated in his application, a new application must be made and a permit obtained from the city clerk-treasurer. (Ord. 507 § 2, 1979).

13.04.030 Use outside city limits.

All sale of water outside the city limits must have prior approval of the city council. (Ord. 507 § 3, 1979).

13.04.040 Responsibility for cost of infrastructure for undeveloped platted and replatted areas.

The developer, if applicable, or property owner shall be responsible for the installation of all water lines and sewer lines and for the construction of streets, with curbing in undeveloped, platted, or replatted areas within the city limits. Costs of construction shall be borne by the developer/property owner. Construction engineering and construction standards are to conform to city specifications as determined and set by the city foreman. No building permit shall be granted until infrastructure construction has met approval of the city foreman. (Ord. 803, 1997).

13.04.050 Water meters.

All water used in and furnished by the city shall be metered by a meter furnished by the city. There shall be a minimum of one meter for each real

property ownership connected with city water. All meters shall be located in an accessible place approved by the city water department, properly protected from frost or other damage and kept under readable circumstances by the property owner so that the same may be read periodically by the water superintendent or other agent of the city. The city may inspect, test and repair any water meters. (Ord. 507 § 5, 1979).

13.04.060 New meters – Connection fees.

The city shall install all new meters for all new users, and there shall be a water connection fee of $1,500 which shall include a minimum sized meter of one inch and shall include connection with the water main, if any, adjacent to the property upon which application is made for connection, but in no event to exceed 100 feet of service pipe, the service pipe being no larger than two inches in size. The charge of $1,700 shall be made for a one and one-half-inch meter installation. Maximum size residential meter shall be one and one-half inches, larger meters for commercial or industrial users will be charged based on actual cost. The charge of $2,500 shall be made for a four-inch fire line installation and connection with the meter being purchased by the user and approved by the city foreman. The charge of $3,400 shall be made for a six-inch fire line installation and connection with the meter being purchased by the user and approved by the city foreman. Fire line installation shall be brought to the property upon which application is made for connection, but in no event to exceed 100 feet. Connection fees for water shall be paid at the time the building permit is filed with the clerk-treasurer's office. A charge of $100.00 shall be made for repair of paved street surface. (Ord. 781 § 1, 1996; Ord. 780 § 1, 1996; Ord. 715 § 1, 1993; Ord. 507 § 6, 1979).

13.04.065 Accounts.

An account is established when an entity has the availability to the use of city utilities. An entity is any natural person, firm, association, corporation, business trust, partnership, limited liability company, state, state agency or state political subdivision, foreign government, the United States of America, or any federal agency or federal political subdivision or other body political. In the event an entity has more one location, each location is a separate account. (Ord. 841 § 2, 1998).

13.04.070 Deposit of water connection charges.

The city clerk-treasurer shall deposit all water connection charges into the water fund. (Ord. 715 § 1, 1993; Ord. 507 § 7, 1979).

13.04.090 Replacement meters.

When an existing water meter no longer meets the standards required by the water department of the city, the city shall install a replacement meter of the same size; however, the installation of any such replacement meter shall be conditioned upon the meter being relocated, if necessary, at the sole discretion of the city water department, in a more accessible place; and provided, that the owner shall provide any additional piping which may be required. A completely new and changed installation for an existing user may, at the option of the city water department, be construed to be a new installation rather than a replacement. The city shall retain title to all new and replacement meters installed pursuant to this chapter. (Ord. 507 § 9, 1979).

13.04.100 Check of meter accuracy.

If a customer requests an accuracy check on any meter, such check shall be run by the city. If the meter proves to be registering high, there will be no charge for the test. If it proves to be either registering correctly or to the advantage of the customer, there shall be a $7.00 charge for the test. (Ord. 507 § 10, 1979).

13.04.110 Service pipe – Placement.

The service pipe must be so arranged so that the supply to each separate house, premises or location of any kind using water may be controlled by a separate stop cock placed just ahead of the water meter. The owner of said property must pay for or be responsible for all water used through said service for his own use or for the use of others to whom it may be accessible. (Ord. 507 § 11, 1979).

13.04.120 Service pipe – Replacement.

Replacement cost of the service pipe from the city main to the property line shall be the responsibility of the city, and from the property line to the premises shall be the responsibility of the property owner. (Ord. 507 § 12, 1979).

13.04.130 Owner care of service pipe.

The service pipes within and without the premises must be kept in repair and protected from freezing at the expense of the owner, who will be

responsible for all damages resulting from leaks or breaks. (Ord. 507 § 13, 1979).

13.04.140 Stop-and-waste cock.

Within the basement wall or within the yard, buried not less than 30 inches deep, a stop-and-waste cock, protected from the frost, must in all cases be placed, by which the service pipes in the buildings may be drained at night during freezing weather. Additional stop-and-waste cocks must also be placed in sags and bends in the pipe when it cannot be otherwise drained. (Ord. 507 § 14, 1979).

13.04.150 Connection.

No connection shall be made with the city mains, nor shall any fittings or repairing of the mains be made, nor any repair or adjustment of water meters be made by anyone except the city water department. (Ord. 507 § 15, 1979).

13.04.160 Access for inspection.

Agents of the city water department may have access at proper hours of the day to all parts of any building or buildings in which water may be delivered from the city mains for the purpose of inspecting the condition of pipe and fixtures and the manner in which the water is used. (Ord. 507 § 16, 1979).

13.04.170 Pipe laying procedure – Construction cost liability.

The cost of the construction of the city water main in the public street or alley to a point adjacent to the private property to be connected shall be paid from funds in the water fund; provided, however, that in the event rock is encountered in the construction of the city main, or it is necessary to install the water line at a depth greater than five feet below the surface of the ground, any additional cost due to such rock construction or added depth shall be charged to the property owner as an added cost. (Ord. 876 § 1, 2001; Ord. 715 § 1, 1992; Ord. 507 § 17, 1979).

13.04.190 Shutoff for repair.

The superintendent of water may at any time order the water shut off from any premises connected with the city mains for repairs, extensions or other necessary purposes. Users in the affected areas will be notified, if possible; however, persons having boilers supplied with city water are cautioned against danger of explosion or collapse. The city will not be liable for any damage that may occur on account of the water being shut off for any of the above purposes, or on account of breaking of any pipe or fixture by the water from the city mains. Water consumers who have any machinery, material, process or plant which requires a constant supply of water shall install upon their premises such water storage facilities as will prevent any damage in case the city water supply may for any reason be interrupted or discontinued; such persons shall also provide backflow devices to protect against loss from shutoff of water service. (Ord. 507 § 19, 1979).

13.04.200 Equipment damage – Excessive water use.

The city is not liable for any loss or damage of any nature whatsoever caused by any defect in the customer's line, plumbing or equipment, and the city may, without further notice, discontinue service to any customer when a defective condition of plumbing or equipment upon the premises of the customer results, or is likely to result, in interference with proper service or is likely to cause contamination of the water. The city does not assume the duty of inspecting the customer's line, plumbing and equipment, and shall not be responsible therefor and will not be liable for failure of the customer to receive service on account of defective plumbing or apparatus on the customer's premises, or for excessive consumption. (Ord. 507 § 20, 1979).

13.04.210 City not responsible for certain conditions.

The city will exercise reasonable diligence and care to furnish and deliver a continuous and sufficient supply of pure water to the customer, and to avoid any shortage or interruption of delivery of the same. The city will not be liable for high or low pressure conditions, interruption or shortage or insufficiency of supply, or any loss or damage occasioned thereby. The use of water upon the premises of the customer is at the risk of the customer, and the responsibility of the city shall cease at the point of delivery of water. Unless otherwise specified in an agreement, the point of delivery shall be the water meter. (Ord. 507 § 21, 1979).

13.04.220 Hose shut off during fire alarm.

All hose except firehose shall be shut off when the fire alarm is sounded and shall remain shut off until the fire is extinguished. (Ord. 507 § 22, 1979).

13.04.230 Prohibited hydrant and water uses.

Meddling, damaging, turning on, or in any way using the fire hydrant, except by persons authorized by the city, is prohibited. Should any person, without authorization from the city, meddle, damage, turn on or in any way use the fire hydrant, a fine of $251.00 will be charged on each occurrence. Permitting water to run to waste is prohibited. (Ord. 924 § 1, 2004; Ord. 655 § 2, 1988; Ord. 507 § 23, 1979).

13.04.240 Shortage of water – City preference.

In case of shortage of supply, the city reserves the right to give preference in the matter of furnishing service to customers, as in the judgment of the city council shall be for the best interests of the city, from the standpoint of public health and necessity. (Ord. 507 § 24, 1979).

13.04.250 Limitations on water use.

The city council shall have the power, by resolution entered upon its minutes, to prescribe limitations on the use of city water for, but not limited to, sprinkling, irrigation and other bulk use. (Ord. 507 § 25, 1979).

13.04.260 Payment procedure.

Any user who has left the premises in the city in which their water account is delinquent shall not be entitled to receive water service at another location within the city without having first cured the delinquency. If the meter cannot be read for any cause, the city shall charge the rate for the previous month read and overcharges or deficits shall be settled after the next reading of the meter. If, from any cause, a meter reading proves to be faulty, the charge shall be at current rate based on consumption during the corresponding time in the previous year. The city will bill for all utilities at the end of each month. Any accounts not paid by the twenty-fourth day of the following month, and until 8:00 a.m. the following business day, shall be considered delinquent and receive a late charge as prescribed in DMC 7.04.170. If an account is not paid by the tenth day of the following month, and until 8:00 a.m. the following business day, the utility service will be terminated and a lien filed. (Ord. 890 § 1, 2002; Ord. 847 § 1, 2000; Ord. 507 § 26, 1979).

13.04.270 Rate schedule.

Each water user of the city shall pay to the city for water furnished to him according to the following rate schedule:

(1) Inside the Incorporated Boundaries of the City. A minimum monthly rental charge of $19.50 to each family living unit, each commercial, industrial and public account for the first 1,000 cubic feet of water used, or fraction thereof; and an additional monthly charge of $0.30 per hundred cubic feet of water used, or fraction thereof, each month over the 1,000-cubic-foot-per-month minimum mentioned in this section, pursuant to the recorded reading of an approved water meter;

(2) Outside the Incorporated Boundaries of the City. A minimum monthly rental charge of $19.50 to each family living unit, each commercial, industrial and public account for the first 500 cubic feet of water used, or fraction thereof; and an additional monthly charge of $0.30 per hundred cubic feet of water used, or fraction thereof, each month over the 500-cubic-foot-per-month minimum mentioned in this section, pursuant to the recorded reading of an approved water meter;

(3) Authorization from the city to use water from the city water stem shall be $20.00 per load for under 5,000 gallons and $40.00 per load for over 5,000 gallons;

(4) A service charge of $25.00 to turn water on and off shall be charged by the city. (Ord. 816 § 1, 1998; Ord. 783 § 1, 1996; Ord. 753 § 1, 1994; Ord. 715 § 2, 1993; Ord. 655 § 3, 1988; Ord. 585 § 1, 1983; Ord. 574 § 1, 1982; Ord. 564 § 1, 1981; Ord. 507 § 27, 1979).

13.04.280 Business and occupation tax – Imposed.

A business and occupation tax at the rate of 18 percent per year is imposed against the gross revenues received for charges for current services for customers of the municipal water, sewer, and garbage utilities, which amount shall be paid monthly by the customer in addition to the current charge for water, sewer and garbage services. (Ord. 654 § 1, 1988; Ord. 638 § 1, 1986; Ord. 502 § 1, 1978).

13.04.290 Business and occupation tax – Transfer to current fund.

The sums of such taxes collected shall be paid monthly from the water, sewer and garbage funds to the general expense fund. The utilization of such taxes collected shall be designated by budget appropriation. (Ord. 502 § 2, 1978).

13.04.300 Charge revisions.

The city council may change or revise the water rate charges, charges for water connections, meter maintenance charges and other charges relating to

the furnishing of water by the city to its citizens and residents by resolution delineating such charge changes adopted by the city council and duly entered in its minutes. (Ord. 507 § 28, 1979).

13.04.310 Obligation of landowners (real property owners).

The owner of the real property upon which the water and other utilities are furnished by the city is liable for all charges associated with city utilities. City utility accounts will be placed only in the landowners' names. Where the legal owner has not paid the water charges and other utilities furnished by the city when due, the city may terminate the water service to the real property. (Ord. 848 § 1, 2000; Ord. 507 § 29, 1979).

13.04.320 Shut off for noncompliance.

On failure to comply with the rules and regulations established as a condition to the use of water or to pay water service charges in the time and manner provided in DMC 13.04.260 and 13.04.270, the water shall be shut off until payment is made for the amount due with $50.00 due as a water turn on fee. Should the occupant or property owner turn on the water after it has been turned off a penalty of $100.00 is due and owing. (Ord. 847 § 1, 2000; Ord. 655 § 4, 1988; Ord. 507 § 30, 1979).

13.04.330 Lien enforcement.

When any charge for water supply to or for turning water on or off from any premises connected with the city mains, shall become delinquent, the water may be shut off from such premises and shall not be turned on again until all such charges and all fines and penalties imposed under the provisions of this chapter or the rules of the water division on account of such delinquency shall have been paid. When any charge or charges, or any portion of, or any installment of any charge or charges on account of any meter supplied, or on account of labor furnished or material supplied in the installation of any meter or meters, or in the installation or repair of any service connection with the city main, or for tapping the city main, shall become delinquent and remain delinquent for a period of 30 days, the same shall bear interest at the rate of 12 percent per year from the date of delinquency until paid; and said delinquent charges and any interest that may accrue thereon shall, in addition to being a personal liability of the applicant, at all times be and remain a permanent charge and lien against such premises until the same are paid. Said lien may be enforced at any time after any of said charges shall become delinquent by shutting off the water from said premises and keeping the same shut off until such delinquent charges and interest, if any, have been paid, and such lien and the enforcement thereof shall be additional remedy for the collection of such charges. (Ord. 507 § 31, 1979).

13.04.340 Penalty for violations.

Any person who wilfully violates water use limitations, as prescribed by resolution as provided in DMC 13.04.250, or any person who wilfully violates the provisions of any other section of this chapter shall be guilty of a misdemeanor and subject to the provisions of DMC 1.01.020. (Ord. 507 § 32, 1979).

13.04.350 Bad check fees.

The clerk-treasurer may establish fees for bad checks tendered in payment of utility bills, where said check is returned as not payable. From that time on, the city may only accept cash from that customer for payment for city utilities. (Ord. 617 § 1, 1986; Ord. 507, 1979).

Chapter 13.05

UNLAWFUL CROSS-CONNECTIONS

Sections:

13.05.010 Definitions.
13.05.020 Cross-connection declared unlawful.
13.05.030 Backflow prevention devices required.
13.05.040 Regulation of private water supplies.
13.05.050 Adoption of state regulations.
13.05.060 Abatement of unlawful cross-connection and installation of backflow prevention devices – Procedure.
13.05.070 Inspections.
13.05.080 Violations – Penalty.

13.05.010 Definitions.

For the purposes of this chapter, the following words or phrases shall have the meanings as hereinafter set forth:

(1) "Backflow" means a flow other than in the intended direction of flow, of any foreign liquids, gases or substances into the distribution system of a public water supply.

(2) "Backflow prevention device" means a device approved by the state Department of Social and Health Services, or such other state department that shall have jurisdiction over the subject matter of backflow prevention devices and by the American Waterworks Association, used to counteract back pressure or prevent siphonage into the distribution system of a public water supply.

(3) "Cross-connection" means any physical arrangement whereby a public water system is connected, directly or indirectly, with any other water supply system, sewer, drain, conduit, pool, storage reservoir, plumbing fixture, or any other source of wastes or liquids of any unknown or unsafe quality which are capable of imparting contamination to a public water supply. (Ord. 670 § 1, 1990).

13.05.020 Cross-connection declared unlawful.

The installation or maintenance of a cross-connection which, in the opinion of the mayor or his designee, will endanger the water quality of any portion of the potable water supply system of the city is declared to be unlawful. (Ord. 670 § 1, 1990).

13.05.030 Backflow prevention devices required.

Backflow prevention devices shall be installed and maintained by any service customer on any service connection to the city's water supply system where said backflow prevention device is deemed to be necessary for the protection of the city's water supply. (Ord. 670 § 1, 1990).

13.05.040 Regulation of private water supplies.

The use or operation of a private water supply system, contrary to the provision of the ordinances of the city, or the laws of the state, or the rules and regulations of the State Board of Health regarding public water supplies, is declared to be unlawful. (Ord. 670 § 1, 1990).

13.05.050 Adoption of state regulations.

Rules and regulations of the state Board of Health regarding public water supply systems, entitled "Cross-Connection Control" as set forth in WAC 248-54-285, as presently set forth therein or as such rules and regulations may be amended from time to time in the future, are adopted by this reference and incorporated in this chapter as set forth in full. (Ord. 670 § 1, 1990).

13.05.060 Abatement of unlawful cross-connection and installation of backflow prevention devices – Procedure.

(a) Cross-connections which are declared by this chapter to be unlawful, whether presently existing or hereafter installed, and/or services requiring backflow prevention devices, and/or unlawful use of a private water supply system, are declared to be public nuisances.

(b) In addition to any other provisions of the municipal code or ordinances of the city pertaining to abatement of public nuisances, these nuisances shall be subject to abatement in accordance with the following procedures:

(1) In the event that the mayor or his designee determines that a nuisance as hereinafter provided exists, written notice shall be sent to the person in whose name the water service is established under the records of the clerk-treasurer's department, and in the case of tenant, the owner, or alternatively, a copy of such written notice shall be posted on the premises involved.

(2) The notice shall provide that the nuisance described therein shall be corrected within 30 days

of the date said notice is mailed or posted on the premises.

(3) In the event said nuisance is not abated within the prescribed period of time, water service to said premises shall be discontinued.

(4) In the event that the nuisance, in the opinion of the mayor or his designee, presents an immediate danger of contamination to the public water supply, service from the city water supply system to the premises may be terminated immediately without prior notice; provided, notice will be posted on the premises in the manner heretofore provided at the time said service is terminated. (Ord. 670 § 1, 1990).

13.05.070 Inspections.

The mayor, or his designee, upon presenting identification, shall be allowed access to all portions of the premises, including buildings and structures, to which water is supplied, at reasonable hours of the day and for the sole purpose of inspecting and determining whether or not there has been compliance with the provisions of this chapter.

Water service may be refused or discontinued to any premises for failure to allow necessary access and inspections. (Ord. 670 § 1, 1990).

13.05.080 Violations – Penalty.

Violation of, or failure to comply with, any of the provisions of this chapter shall be a gross misdemeanor, and any person found guilty thereof shall be punished by a fine not exceeding $500.00, or imprisonment not exceeding six months, or both such fine and imprisonment. It shall be a separate offense for each and every day, or portion thereof, during which any violation of the provisions of this chapter is committed, continued or permitted. (Ord. 670 § 1, 1990).

Chapter 13.08

SEWER SYSTEM[1]

Sections:

13.08.010 Definitions.
13.08.020 Sewer department – Established.
13.08.030 Sewer department – Personnel appointment.
13.08.040 Sewer department – Superintendent duties.
13.08.050 Use of public sewers required.
13.08.060 Private sewage disposal.
13.08.070 Building sewers and connections.
13.08.080 Connection – Drain and pump requirements.
13.08.090 Responsibility for cost of infrastructure for undeveloped platted and replatted areas.
13.08.100 Private system – Permitted when.
13.08.110 Opening – Permit required.
13.08.120 Connection – Fee – Designated.
13.08.130 Connection – Fee – Disposition.
13.08.140 Sewer connection fund – Established.
13.08.150 Sewer connection fund – Moneys source.
13.08.160 Prohibited discharges.
13.08.170 Prohibited discharges – Wastes prohibited by superintendent.
13.08.180 Superintendent – Discretionary powers.
13.08.190 Grease, oil and sand interceptors.
13.08.200 Maintenance of preliminary treatment or flow-equalizing facilities.
13.08.210 Installation of manholes.
13.08.220 Measurements, tests and analyses.
13.08.230 Special agreements or arrangements.
13.08.240 Equipment damaging prohibited.
13.08.250 Powers and authority of inspection.
13.08.260 Liability for personal injury or property damage.
13.08.270 Right of entry.
13.08.280 Violation – Penalty.

1. For statutory provisions regarding the authority of third class cities to establish, construct, and maintain drains and sewers and to compel all property owners on streets and alleys or within 200 feet thereof to make proper connections therewith and to use the same for proper purposes, see RCW 35.24.290(4); for statutory provisions regarding the municipal management of a sewage system, see Chapters 35.67, 35.91 and 35.92 RCW.

DAVENPORT

W A S H I N G T O N

FIRE DEPARTMENT

August 7, 2013

Mayor Karen Carruth
City of Davenport
PO Box 26
Davenport, WA 99122

RE: Fire Storage and Pressures

Dear Mayor Carruth,

I have taken the time to review the draft Water Plan that the engineering firm USKH has prepared for the City of Davenport. Within that document surveys were performed on the city's water system and those results appear adequate to support fire fighting operations.

The fire storage capacity in the elevated storage tanks is sufficient for extended use on a major incident. The pressures we see at the hydrants are on average enough to sustain common fire suppression efforts however, some areas in town could be improved. Those lower than average pressure hydrants have been identified and are kept in mind when connecting hose to a hydrant in emergencies. Even with "nesting", the storage there is of sufficient capacity and the fire department approves this practice.

The fire department continues to work with the City's maintenance superintendent to identify possible trouble spots in town and have those areas further evaluated and repaired if necessary to restore desired flows.

Regards,

Craig Sweet
Chief

411 Morgan St. • PO Box 26 Davenport, WA 99122 • (509)725-4352 • (509)725-4300 Fax

MINUTES OF THE REGULAR MEETING OF THE DAVENPORT CITY COUNCIL
July 14, 2010

ROLL CALL

Mayor Karen Carruth called the meeting to order at 7:00 p.m. Council members present were, Alan Coriell, Deanna Fitzpatrick, J. Scott Liebing, Pat Rosman, and Theresa Telford.
Absent: Tom Sherbon.
Also present were, George Arland, Fred Bell, Katie Fitzpatrick, Steve Goemmel, Virginia Hutsell, Dave Leath, Kelly Rosman, Vicki Shepard, Mark Smith, and Craig Sweet.

MINUTES

Deanna Fitzpatrick made a motion to accept the minutes of the regular meeting of June 23, 2010. Seconded by Theresa Telford, the motion carried.

CONFIRMATION OF AGENDA

No Changes

COMMENT / SIGN IN SHEET

Virginia Hutsell signed in to discuss fireworks use in the City of Davenport. Virginia asked the City Council why people in Davenport were allowed to use forbidden fireworks to celebrate the 4th of July. She said that the mortar shells and M-80 that people buy on the reservation were a real problem in her neighborhood. She said that she called the Lincoln County Sheriff's office and they told her that there was nothing they could do about it. Virginia asked the City Council to consider an ordinance against fireworks. Mayor Carruth offered to call Lincoln County Sheriff Wade Magers and ask him why they did not enforce the State laws pertaining to illegal fireworks.
Vicki Shepard signed in to invite everyone to attend the library book sale held during Pioneer Days. The sale will be on the sidewalk in front of the Library. Vicki briefed the City Council on the search for a new library board member. She told the City Council that so far they have not had any interest in the open position.
Lincoln County Park and Recreation District #3 President George Arland signed in to ask the City Council if they would consider paying a change order to Meridian Construction for extra work done by Pool World during the construction of the pool. George gave a brief history of how the pool was constructed and told the City Council that ground water became an issue. Pool World wrote a change order but did not stop construction to resolve the issue. The pool was completed but the change order was never paid. George asked the City Council to pay this invoice. Mayor Carruth said that Finance Committee would have a recommendation on this issue during the committee reports. George thanked the City Council for their consideration.

COMMITTEE REPORTS

FINANCE

Pat Rosman reported that the Committee met to review the second quarter results for 2010. Pat told the City Council that the City was in good shape so far this year. Revenues are 85% of the budgeted amount and expenses are 36%. Pat asked City Administrator Steve Goemmel if there was anything that could change the status of the budget going forward. Steve told the City Council that he did not see anything other than trying to finance the Davenport Sports Complex that could stretch the budget. He said that bids would go out in a couple of weeks and once we get the bid numbers, the City Council can discuss financing options for the project.
Pat Rosman told the City Council that the Committee discussed a request from the Lincoln County Park District #3 to pay an open invoice incurred in the construction of the pool. Pat said that the Committee recommends that the City Council pay this invoice but they want assurances that Pool World will honor their warranty and fix the tiles in the pool that have fallen off. The Committee also wants Pool World to forgive an invoice for warranty work to repair a pump. Pat Rosman made a motion to pay $4,885.84 to the Lincoln County Park and Recreation District #3 to satisfy the open invoice from Pool World. The motion was seconded by Deanna Fitzpatrick, the motion carried.

WATER/SEWER/GARBAGE

Deanna Fitzpatrick reported that the Committee met with representatives of Sunshine Disposal to discuss garbage issues. No action was taken.

MAYOR REPORT

Mayor Carruth told the City Council that she received an invitation to see the Air Force Thunderbirds show at Northern Quest Casino. She said that she was unable to attend but she hoped that other city council members could go in her place to see the show.
Mayor Carruth read the names of Pete Schweiger, Merrie Foster, and Kym Faulkner as persons who submitted letters of interest for the vacant city council position. Mayor Carruth also thanked Kelly Rosman for submitting her name and then withdrawing it. She invited Kelly to apply for open positions on the Planning Commission and the Library Board. Mayor Carruth asked the city council to schedule interviews for the candidates on July 28, 2010 during the next meeting of the city council.

Mayor Carruth briefed the City Council on the World Harmony Runner's stop in Davenport. She read a thank you note from the runners for the hospitality that they received in Davenport.
Mayor Carruth invited all citizens to attend an informational meeting on the pool and the upcoming pool levy that the voters will be asked to approve in November. The levy is needed to run the pool for the next two years. The meeting will be July 27, 2010 at 7:00p.m. at Memorial Hall.

OLD BUSINESS
None

NEW BUSINESS
1. Water Efficiency Report. City Maintenance Supervisor Fred Bell briefed the city council on new State laws that required cities to have water conservation programs. Fred said that cities are required to have public meetings on water conservation and develop programs for water management. He said that the City of Davenport embark on this process by having a public meeting tonight and develop a plan for water conservation going forward. Fred told the City Council that inserts on water conservation will go out in the next billing and that the City will hold another public meeting on the issue in the future.

APPROVAL TO PAY BILLS
Theresa Telford made a motion to pay Claims/Vouchers #6796 in the amount of $2,525.00, Claims/Voucher #6799 in the amount of $175.78, and Claims/Voucher #6800-#6842 in the amount of $128,223.87 and Payroll/Vouchers in the amount of $48,901.91. Seconded by Pat Rosman, the motion passed.

ADJOURNMENT
Pat Rosman made a motion to adjourn the meeting at 8:00 p.m. Seconded by Theresa Telford, the motion passed.

David M. Leath, Clerk/Treasurer

Karen Carruth, Mayor

MINUTES OF THE REGULAR MEETING OF THE DAVENPORT CITY COUNCIL
July 13, 2011

ROLL CALL
Mayor Karen Carruth called the meeting to order at 7:00 p.m. Council Members present were, Alan Coriell, Kathyrn Jump, J. Scott Liebing, Pat Rosman, Pete Schweiger, Brad Sweet, and Theresa Telford.
Also present were, Fred Bell, David Baughman, Steve Goemmel, Virginia Hutsell, Dave Leath, Kelly Rosman, Mark Smith, and Brian Telford.

MINUTES
Theresa Telford made a motion to accept the minutes of the June 22, 2011 meeting. Pat Rosman seconded the motion, the motion carried.

POLICE REPORT
Chief Criminal Detective Brian Telford reported 124 calls for service during the month of June. Brian detailed the various types of calls for the City Council. Mayor Carruth thanked Brian for his report and his service to the community.

PUBLIC HEARING
Mayor Carruth opened the public hearing on water efficiency at 7:15 p.m. The Mayor asked for question or comments from the public. There were none. Fred Bell told the City Council that the City is required to have public hearings to encourage water conservation. Mayor Carruth closed the public hearing at 7:20 p.m.

CONFIRMATION OF AGENDA
No Changes

COMMENT / SIGN IN SHEET
Virginia Hutsell signed in to ask the City Council to do something about the illegal fireworks displays in the City of Davenport during the 4th of July celebration. Virginia told the City Council that people in her neighborhood were lighting off explosive shells and concussion devices that shook her windows. Virginia is concerned about the fire danger and the potential of injury from these devices which are illegal. City Administrator Steve Goemmel asked Brian Telford to explain the Lincoln County Sheriff's Office policy on enforcing the State fireworks laws. Brian told the City Council that the kinds of devices that Virginia described are indeed illegal. He explained that an officer has to witness the detonation of an illegal firework to issue a citation otherwise once the shell is exploded, there is no proof. Virginia asked the City Council to outlaw fireworks within the City limits of Davenport. Mayor Carruth thanked Virginia for her input.

COMMITTEE REPORTS
Finance
Pete Schweiger reported that the Committee met to discuss the 2011 second quarter results. Pete told the City Council that the City has received 80% of its budgeted revenues for this year and expenditures were at 46%. City Administrator Steve Goemmel commented that the revenue figure is slightly distorted by some inter-fund transfers. Pete told the City Council that the City's budget was in good shape through the second quarter of 2011.
Streets
Brad Sweet reported that the Department of Transportation approached the City about signs in their right-of-way on Highway Two. The Department of Transport asked the City to remove these signs because they are prohibited by State law. City Clerk Dave Leath commented that the City usually enforces the Department of Transportation regulations within the City and that the Davenport Municipal Code is vague about temporary signs such as a sandwich board. Brad told the City Council that City staff will continue to research the issue and report back to the Committee.
Cemetery/Park
Kathryn Jump reported that the Committee met to discuss user fees for the Davenport Sports Complex and Jahn Field. Kathryn told the City Council that City staffs are negotiating with Wheatland Little League and Davenport High School to see what level of service they were interested in. Kathryn told the City Council that the Committee would make a recommendation to the City Council once they had a chance to review the proposals.
Airport
Theresa Telford asked for a Committee meeting on July 27, 2011 at 6:30 p.m. to discuss future activities at the Davenport Municipal Airport.

SUPERIOR COURT OF WASHINGTON FOR LINCOLN COUNTY

AFFIDAVIT OF PUBLICATION

CITY OF DAVENPORT	)	NOTICE OF PUBLIC HEARING
	)	WATER USE EFFICIENCY - 2010
	)	

STATE OF WASHINGTON

PUBLIC NOTICE
$27.50

MARCIA R. SMITH, being first duly sworn on oath deposes and says that she is the OFFICE MANAGER of the Davenport Times, a weekly newspaper, that said newspaper is a legal newspaper and it is now and has been for more than six months prior to the date of publication hereinafter referred to, published in the English language continually as a weekly newspaper in Lincoln County, Washington, and it is now and during all of said time was printed in an office maintained at the aforesaid place of publication of said newspaper, which said newspaper had been approved as a legal newspaper by order of the Superior Court of the State of Washington in and for Lincoln County. That the following is a true copy of a Public Notice as it was published in regular issues commencing on the 30th day of June, 2011, and ending on the 7th day of July, 2011, both dates inclusive, and that such newspaper was regularly distributed to its subscribers during all of said period:

Marcia R Smith

SUBSCRIBED and SWORN to before me
this 7th day of July, 2011.
State of Washington
County of Lincoln

Notary Public
State of Washington
AMY L JENNESS
My Appointment Expires Feb 25, 2014

Amy L Jenness
Title: Notary Public
My appointment expires Feb 25, 2014

CITY OF DAVENPORT
NOTICE OF PUBLIC HEARING

THE DAVENPORT CITY COUNCIL WILL CONDUCT A PUBLIC HEARING ON WATER USE EFFICIENCY FOR 2010.

A public hearing will be held at the Davenport City Council meeting on July 13, 2011, at 7:15 p.m. This hearing is to discuss the City of Davenport's water conservation plan and its water use efficiency annual performance report for 2010. The public hearing will be held in the City Council Chambers located at 411 Morgan Street, Davenport. All citizens are encouraged to attend.

June 30, July 7, 2011

CITY OF DAVENPORT
NOTICE OF
PUBLIC HEARING
DRAFT WATER SYSTEM
PLAN

A public hearing will be held on March 13, 2013, at 7:15 p.m. in the City Council Chambers, 411 Morgan Street. This hearing will be to present and discuss the Draft Water System Plan and proposed Capital Improvement Plan for the City of Davenport.

Citizens attending the hearing will have the right to provide written or oral comments and ask questions concerning the city's Draft Water System Plan. Copies of the current draft are available at city hall for review.

David Leath
City Clerk/Treasurer

Feb. 28, March 7, 2013

SUPERIOR COURT OF WASHINGTON FOR LINCOLN COUNTY

AFFIDAVIT OF PUBLICATION

CITY OF DAVENPORT	)))	PUBLIC HEARING 3/13/13: DRAFT WATER SYSTEM PLAN

STATE OF WASHINGTON

PUBLIC NOTICE
$40.00

HARLAN SHELLABARGER, being first duly sworn on oath deposes and says that he is the PUBLISHER, of the Davenport Times, a weekly newspaper. That said newspaper is a legal newspaper and it is now and has been for more than six months prior to the date of publication hereinafter referred to, published in the English language continually as a weekly newspaper in Lincoln County, Washington, and it is now and during all of said time was printed in an office maintained at the aforesaid place of publication of said newspaper, which said newspaper had been approved as a legal newspaper by order of the Superior Court of the State of Washington in and for Lincoln County. That the following is a true copy of a Public Notice as it was published in regular issues commencing on the 28th day of February 2013, and ending on the 7th day of March 2013, both dates inclusive, and that such newspaper was regularly distributed to its subscribers during all of said period:

Harlan Shellabarger

SUBSCRIBED and SWORN to before me
this 7th day of March, 2013.
State of Washington
County of Spokane

RUBI M GEARY
COMMISSION EXPIRES
NOTARY PUBLIC
06-20-14
STATE OF WASHINGTON

Rubi M. Geary

Title: Notary Public
My appointment expires 6/20/14

MINUTES OF THE REGULAR MEETING OF THE DAVENPORT CITY COUNCIL
March 13, 2013

ROLL CALL

Mayor Karen Carruth called the meeting to order at 7:00 p.m. Council Members present were, Alan Coriell, Pat Katz, J. Scott Liebing, Nathan Hansen, Pat Rosman, Pete Schweiger, and Theresa Telford.
Also present were: Fred Bell, Kennet Bertelsen, Gene Hein, Steve Goemmel, Dave Leath, Mike Stauffer, Craig Stephens, and Mark Smith.

MINUTES

Alan Coriell made a motion to approve the minutes of the February 27, 2013 meeting. The motion was seconded by Theresa Telford. The motion carried.

PUBLIC HEARING

1. Draft of the 2013 Water Plan. Mayor Carruth opened the public hearing for the 2013 Draft Water Plan at 7:15 p.m. The Mayor recognized Kennet Bertelsen from USKH, Inc. and asked him to present the plan to the City Council. Kennet gave a presentation to the City Council detailing the proposed updates to the water plan. He told the City Council that the plan has to be updated every six years to comply with Department of Health requirements. He told the City Council that once an updated water plan is approved, he can help the City apply for grants to make improvements to the water system. There was discussion pertaining to the water pressure in Davenport and the possible location of a new well for the City of Davenport. Mayor Carruth asked for comments from the public and there were none. The Mayor thanked Kennet for his presentation. With no further comments, the Mayor closed the public hearing at 7:29 p.m.

POLICE REPORT

Sergeant Mike Stauffer gave the police report for the month of March. Mike reported 64 calls for service during February. Mike detailed the various types of calls and asked for questions or comments. Mayor Carruth thanked Mike for his report and his service to the community.

CONFIRMATION OF AGENDA

No Changes

COMMENT / SIGN IN SHEET

None

COMMITTEE REPORTS

No Reports

MAYOR REPORT

Mayor Carruth asked the City Council to make sure they file their Public Disclosure forms before April 15, 2013.

OLD BUSINESS

1. Craig Stephens Conditional Use Application for a Home Occupation to Sell Guns at 1207 Adams Street in Davenport – Craig Stephens applied to the Planning Commission for a conditional use permit to have a home based business. At the last meeting of the City Council, the motion to approve this application was tabled because the City Council wanted clarification on who owned the home before they voted. A conditional use permit can only be granted to the legal owner of the property. At that point, City Administrator recommended that Craig produce a letter from his attorney stating that Craig was the legal owner of the property. The City Council agreed with Steve and tabled the motion.
Craig Stephens asked the City Council to reconsider his application for a conditional use permit and he produced a copy of his real estate contract with Mr. Scharff as proof that he was the legal owner of his home. Alan Coriell commented that he didn't think that it was the City Council's place to get involved with an ownership dispute between two private parties. The City Council debated the issue of getting a legal opinion and who would pay for the legal fees.
Alan Coriell made a motion to approve a conditional use permit for Craig Stephens with the conditions and that the ATF be aware of the proximity of Craig's residence to Trinity Church, and Jahn Field, plus, Craig must renew his license with the Lincoln County Sheriff's office each year. The motion was seconded by Theresa Telford. Alan Coriell voted for the motion, Pat Katz, Nathan Hansen, Pat Rosman, Scott Liebing, Pete Schweiger, and Theresa Telford voted against the motion. The motion failed.
The City Council further discussed the issue and decided that Craig's application was still active and would remain so for a period of not more than a year. Nathan Hansen made a motion to table the application until such time that Craig Stephens produces a letter from his attorney, at his own expense, stating that he is the legal owner of the property. Pat Rosman seconded the motion. The motion carried.

NEW BUSINESS
None

APPROVAL TO PAY BILLS
Theresa Telford made a motion to pay Claims/Vouchers #9405-#9440 in the amount of $92,925.60, and Payroll/Vouchers #9374-#9395 in the amount of $45,798.40. The motion was seconded by Pete Schweiger. The motion carried.

ADJOURNMENT
Pete Schweiger made a motion to adjourn the meeting at 8:07 p.m. Alan Coriell seconded the motion, the motion carried.

David M. Leath, City Clerk/Treasurer

Karen Carruth, Mayor

Washington State Department of Health
Division of Environmental Health
Office of Drinking Water

Local Government Consistency Review Checklist

Water System Name: DAVENPORT WATER SYSTEM PWS ID: 18100 N

Planning/Engineering Document Title: WATER SYSTEM PLAN Plan Date: 09/25/2013

Local Government with Jurisdiction: CITY OF DAVENPORT

WAC 246-290-108 Consistency with local plans and regulations:
Consistency with local plans and regulations applies to planning and engineering documents under WAC 246-290-106, 246-290-107, and 246-290-110(4)(b (ii).

1) Municipal water suppliers must include a consistency review and supporting documentation in its planning or engineering document describing how it has addressed consistency with **local plans and regulations**. This review must include specific elements of local plans and regulations, as they reasonably relate to water service as determined by Department of Health (DOH). Complete the table below and see instructions on back.

Local Government Consistency Statement	Page(s) in Planning Document	Yes – No – Not Applicable
a) The water system service area is consistent with the adopted land use and zoning within the applicable service area.	Pg 2-5, 3-2, 4-1, 4-2; EX 3, 4, & 6	YES
b) The six-year growth projection used to forecast water demand is consistent with the adopted city/county's population growth projections. If a different growth projection is used, provide an explanation of the alternative growth projection and methodology.	Pg 4-2, 4-3, 4-4	YES
c) Applies to cities and towns that provide water service: All water service area policies of the city or town are consistent with the utility service extension ordinances of the city or town.	Pg 1-1; 1-2, 2-5	YES
d) Service area policies for new service connections are consistent with the adopted local plans and adopted development regulations of all jurisdictions with authority over the service area [City(ies), County(ies)].	Pg 2-5	YES
e) Other relevant elements related to water supply are addressed in the water system plan, if applicable; Coordinated Water System plans, Regional Wastewater plans, Reclaimed Water plans, Groundwater Area Management plans, and Capital Facilities Element of Comprehensive plans.	Pg 6-1, 6-2, 6-3, 6-4, 9-1, 9-2	YES

I certify that the above statements are true to the best of my knowledge and that these specific elements are consistent with adopted local plans and development regulations.

Steven J. Goemmel 9-25-13
Signature Date

STEVEN J GOEMMEL, CITY ADMINISTRATOR, CITY OF DAVENPORT
Printed Name, Title, & Jurisdiction

WORKSHEET 6-1: ERU Determinations

Water System Physical Capacity Documentation based on MDD

Note: *Capacity determinations are only for existing facilities that are operational for the water system.*

Specific Single-Family Residential Connection Criteria (measured or estimated demands) (see Chapter 5):

Average Day Demand (ADD): gpd/ERU

Maximum Day Demand (MDD): gpd/ERU

Water System Service Connections correlated to ERUs			
Service Classification	**Total MDD for the classification, gpd**	**Total # Connections in the classification**	**ERUs**
Residential			
Single-family			
Multifamily			
Nonresidential			
Industrial			
Commercial			
Governmental			
Agricultural			
Recreational			
Other (specify) *All Nonresidential combined*			
DSL			-
Other (identify)			
Total existing ERUs (Residential + Nonresidential + Non-revenue + Other) =			

Physical Capacity as ERUs	
Water System Component (Facility)	**Calculated Capacity in ERUs for each component**
Source(s)	
Treatment	
Equalizing Storage	
Standby Storage	
Distribution	
Transmission	
Other (specify)	
Water System Physical Capacity (ERUs) = (based on the limiting water system component shown above)	

Note: *If multiple-day storage is needed to meet MDD, another approach to estimate the ERU capacity is necessary.*

Appendix E LINCOLN COUNTY ZONING AND PLANNING INFORMATION

Zoning

Lincoln County Washington

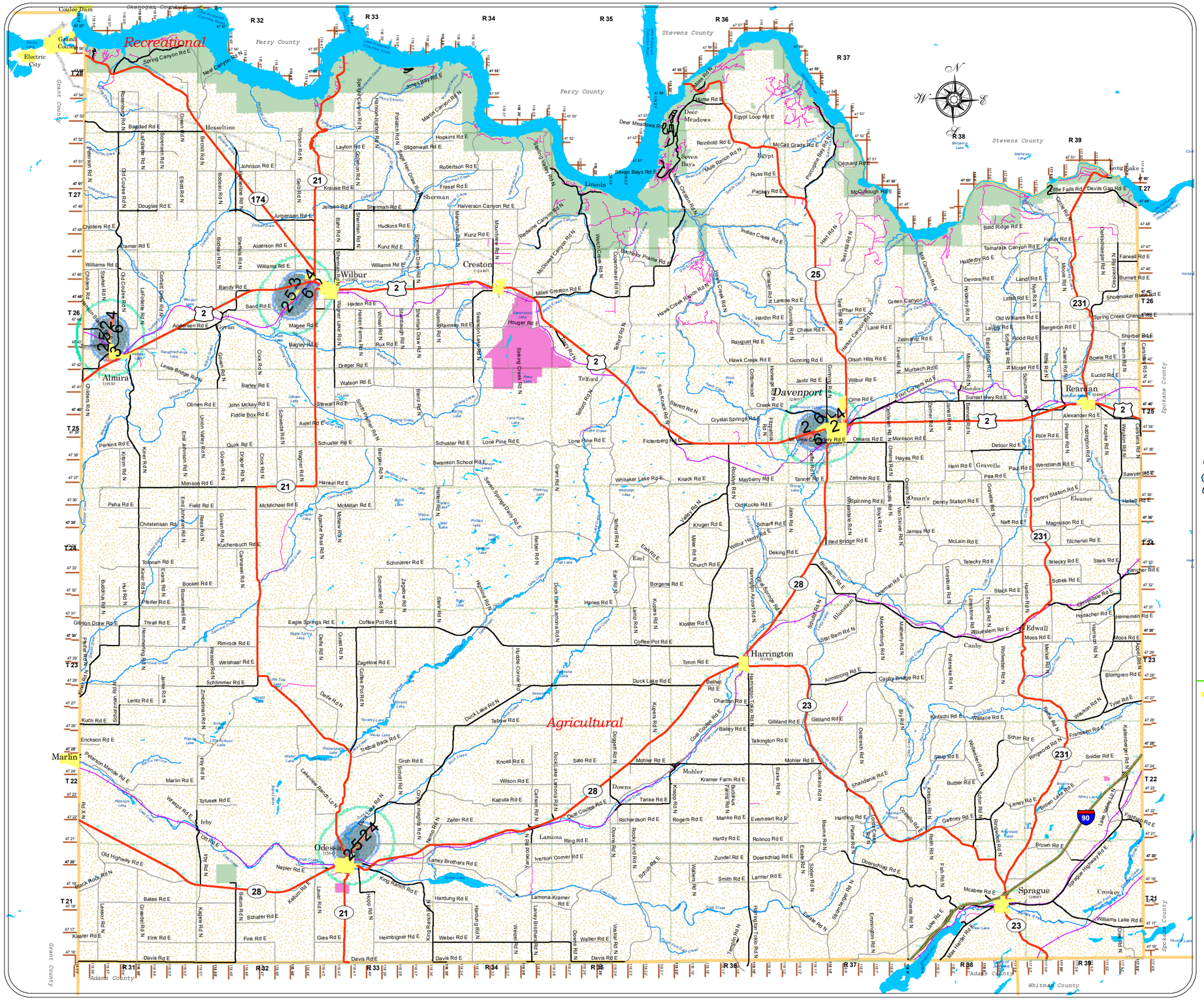

Legend

- Agricultural
- Recreational
- Local Business
- Commercial
- Industrial
- PublicFacilities
- Incorporated
- Residential
- Runway
- ApproachSurface
- PrimarySurface
- Zone1
- Zone2
- Zone3
- Zone4
- Zone5
- Zone6
- HorizontalSurface
- ConicalSurface
- US
- State
- Co. Surfaced
- Co. Gravel/Dirt
- City
- Private Named
- RR Active
- Lake
- Stream
- County Boundaries
- Cities
- Township
- Transmission Lines

Disclaimer: This product is provided 'as is' without warranty of any kind, either expressed or implied, including, but not limited to, the implied warranties of merchantability and fitness for a particular use. Lincoln County will not be liable to the user of this product for any activity involving the product with respect to the following: (a) lost profits, lost savings, or any other consequential damages; (b) the fitness of the product for a particular purpose; or (c) use of the product or results obtained from use of the product.

Lincoln County cannot assure the reliability or suitability of this information for a particular purpose. Original data was compiled from various sources. Spatial information may not meet National Map Accuracy Standards though it is constantly being improved so that it will meet or exceed these standards. This information may be updated without notification.

Please respect private property rights. Do not trespass to access public lands. Land ownership is constantly changing and public lands that were public at the time these GIS datasets were updated may now be private. Please verify ownership with the County Assessor's Office. Many of the roads represented on this map are private and do not represent a public easement. These include Private Named, Private Unnamed, and Driveways. Please contact Courtney at Lincoln County Land Services for any questions regarding GIS mapping (509 725-7041, gis@co.lincoln.wa.us).
Visit www.co.lincoln.wa.us for answers to a wide array of questions regarding Lincoln County.

December 2009

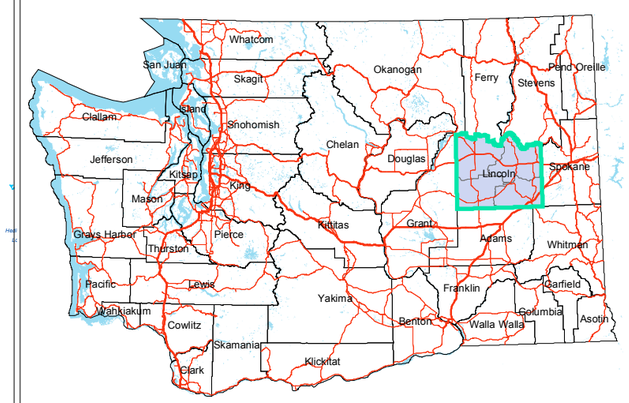

Approximate Mileages

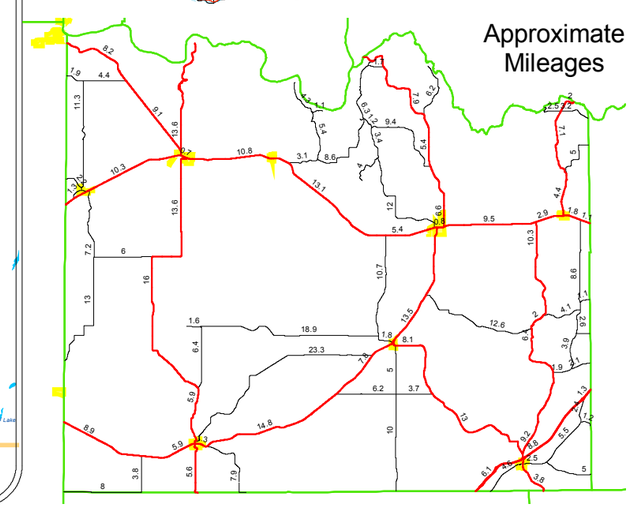

Washington State Department of Health
Division of Environmental Health
Office of Drinking Water

Local Government Consistency Review Checklist

Water System Name: DAVENPORT WATER SYSTEM PWS ID: 18100 N

Planning/Engineering Document Title: WATER SYSTEM PLAN Plan Date: 09/25/2013

Local Government with Jurisdiction: CITY OF DAVENPORT

WAC 246-290-108 Consistency with local plans and regulations:
Consistency with local plans and regulations applies to planning and engineering documents under WAC 246-290-106, 246-290-107, and 246-290-110(4)(b (ii).

1) Municipal water suppliers must include a consistency review and supporting documentation in its planning or engineering document describing how it has addressed consistency with **local plans and regulations**. This review must include specific elements of local plans and regulations, as they reasonably relate to water service as determined by Department of Health (DOH). Complete the table below and see instructions on back.

Local Government Consistency Statement	Page(s) in Planning Document	Yes – No – Not Applicable
a) The water system service area is consistent with the adopted land use and zoning within the applicable service area.	Pg 2-5, 3-2, 4-1, 4-2; EX 3, 4, & 6	YES
b) The six-year growth projection used to forecast water demand is consistent with the adopted city/county's population growth projections. If a different growth projection is used, provide an explanation of the alternative growth projection and methodology.	Pg 4-2, 4-3, 4-4	YES
c) Applies to cities and towns that provide water service: All water service area policies of the city or town are consistent with the utility service extension ordinances of the city or town.	Pg 1-1; 1-2, 2-5	YES
d) Service area policies for new service connections are consistent with the adopted local plans and adopted development regulations of all jurisdictions with authority over the service area [City(ies), County(ies)].	Pg 2-5	YES
e) Other relevant elements related to water supply are addressed in the water system plan, if applicable; Coordinated Water System plans, Regional Wastewater plans, Reclaimed Water plans, Groundwater Area Management plans, and Capital Facilities Element of Comprehensive plans.	Pg 6-1, 6-2, 6-3, 6-4, 9-1, 9-2	YES

I certify that the above statements are true to the best of my knowledge and that these specific elements are consistent with adopted local plans and development regulations.

Courtney Thompson 9/26/13
Signature Date

Courtney Thompson, Planner, Lincoln County
Printed Name, Title, & Jurisdiction

Appendix F CITY OF DAVENPORT STANDARD PLANS

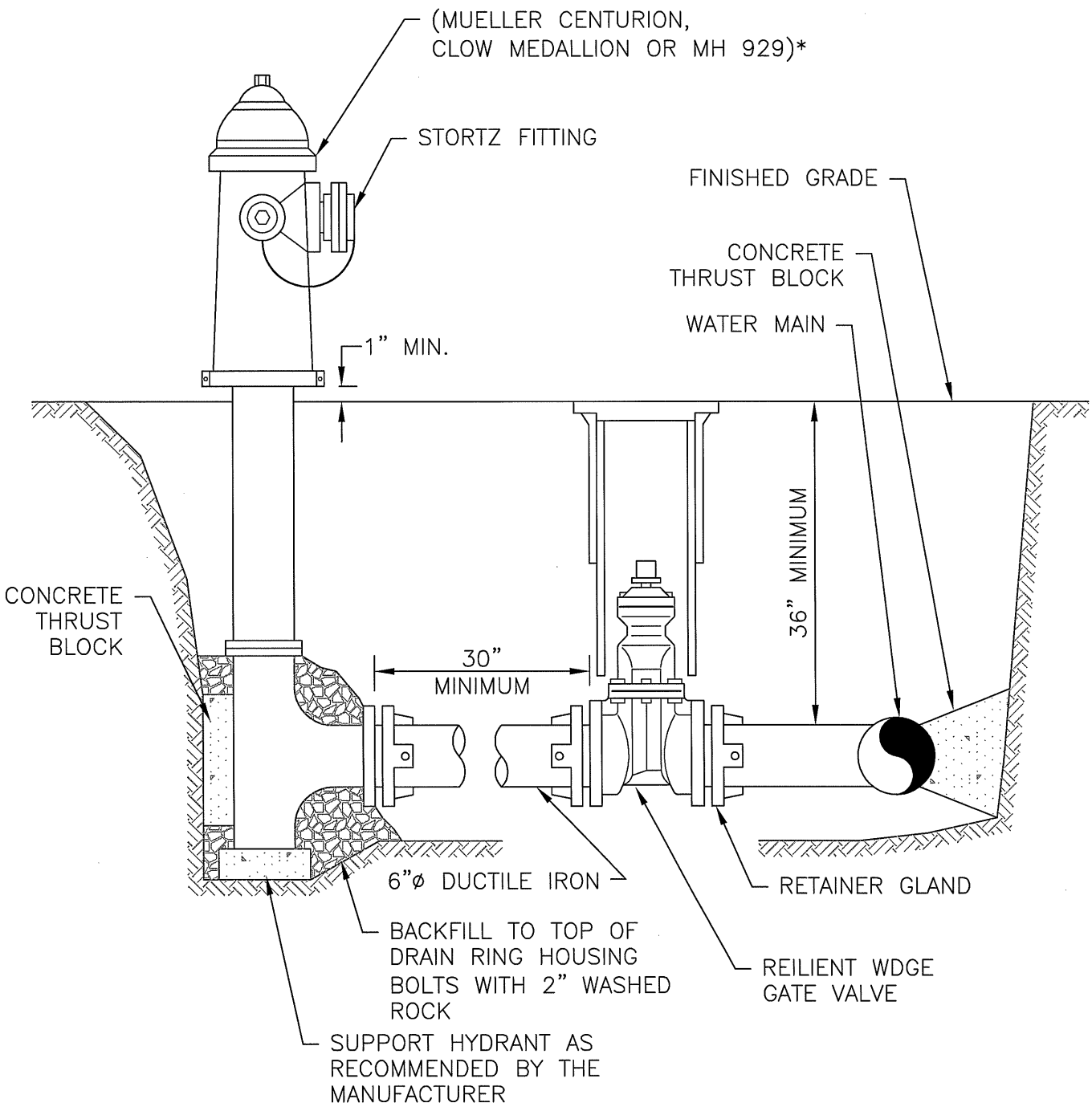

1 TYPICAL FIRE HYDRANT

NTS

* (OR APPROVED EQUAL)

NOTE:

1. DEAD END MAIN EXTENSIONS OVER 50' SHALL BE 8" MINIMUM.
2. USE PORT 5" STORTZ, MVO 5-1/4" WITH ALL OPERATING NUTS THE SAME SIZE.
3. AN UNOBSTRUCTED THRRE FOOT MINIMUM WORKING AREA RADIUS SHALL BE PROVIDED AROUND ALL HYDRANTS.

CITY OF DAVENPORT
DEPARTMENT OF PUBLIC WORKS

TYPICAL
FIRE HYDRANT

APPROVED BY
CITY ENGINEER _____ DATE _____

REF	DWN	CKD	DATE	FILE
	ALB	JNL	10/15/09	FIG 4-01

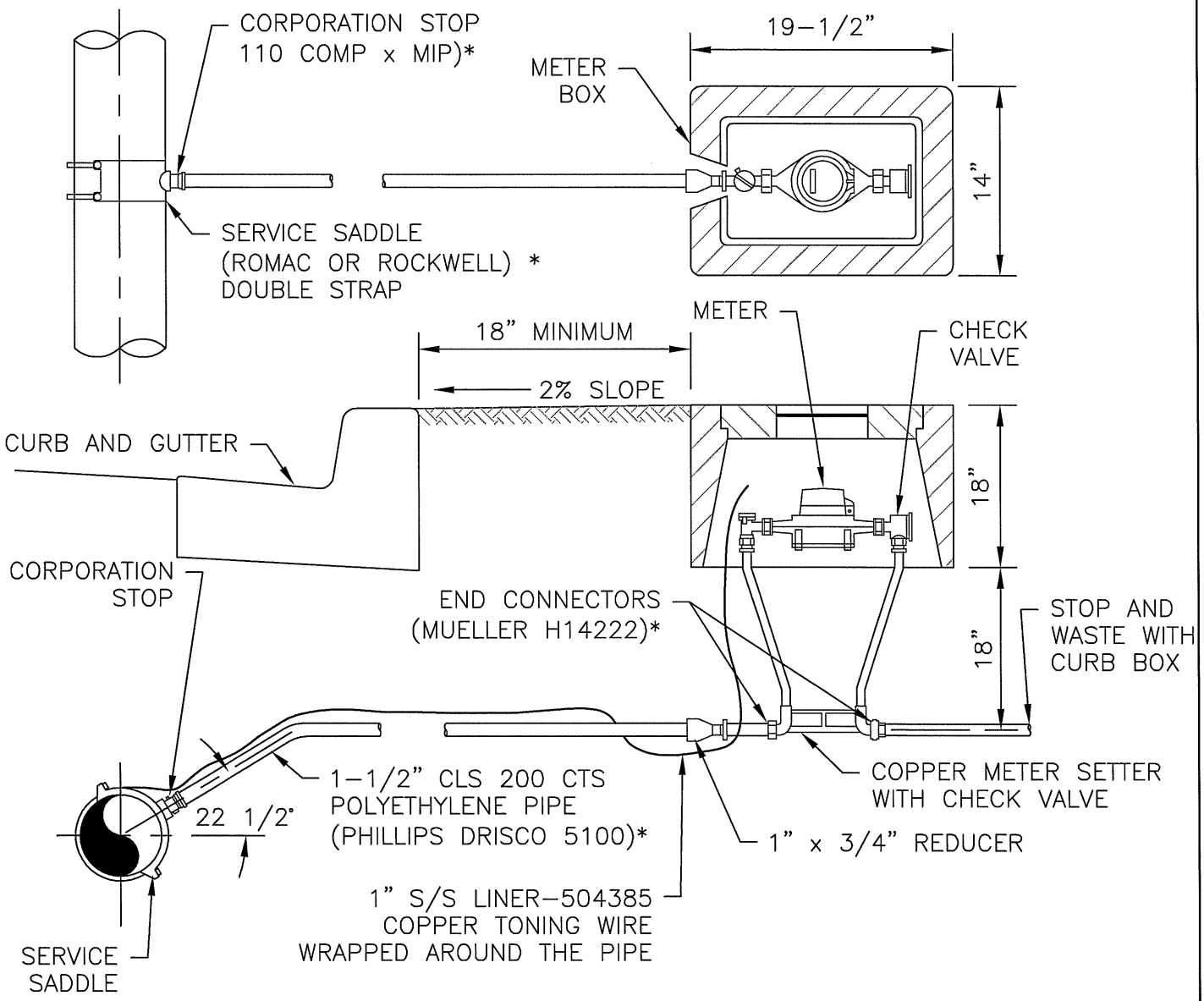

1 1"-2" SINGLE METER SERVICE

NTS

* (OR APPROVED EQUAL)

ENVIRONMENT	METER BOX	LID TYPE
CONCRETE SIDEWALK	*BROOKS SERIES 36/65(2") CONCRETE OR CHRISTY B9X	CONCRETE
CONCRETE DRIVEWAY AND OTHER TRAFFIC AREAS	*BROOKS SERIES 36/65(2") CONCRETE OR FOGTITE I-D	CAST IRON TRAFFIC COVER
EARTH	*CARSON SERIES 1419-B PLASTIC	*CARSON PLASTIC 1419 READER LID

NOTES:

1. STAINLESS STEEL INSERTS REQUIRED FOR ALL MUELLER 110 COMPRESSION FITTINGS.
2. ALL SERVICE SADDLES SHALL HAVE RUBBER GASKET AND I.P. THREADS.

CITY OF DAVENPORT
DEPARTMENT OF PUBLIC WORKS

1"-2" SINGLE METER SERVICE

APPROVED BY
CITY ENGINEER _____ DATE _____

REF	DWN	CKD	DATE	FILE
	ALB	JNL	10/15/09	FIG 4-02

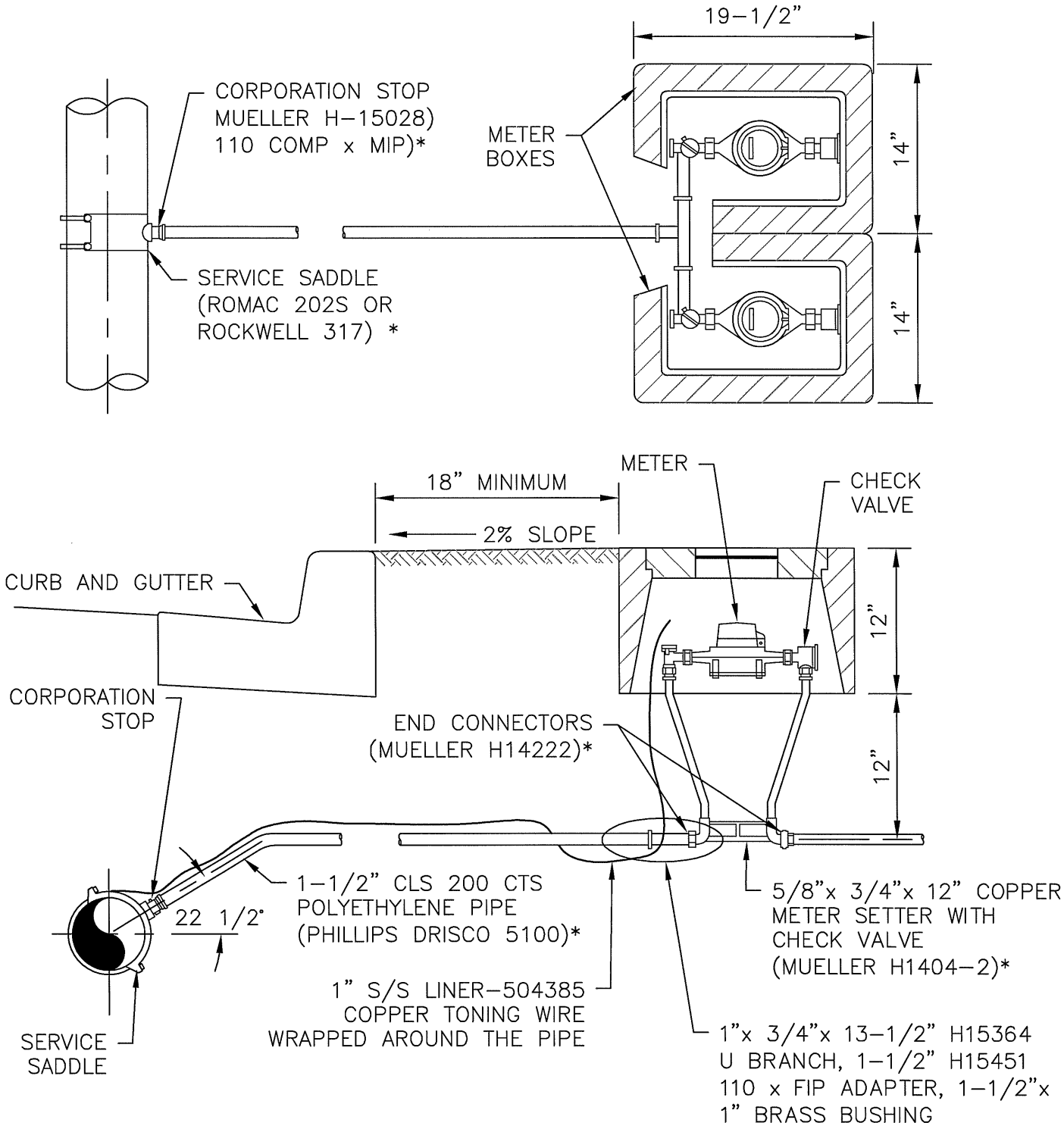

1 **5/8" DUAL METER SERVICE** NTS

* (OR APPROVED EQUAL)

NOTES:

1. STAINLESS STEEL INSERTS REQUIRED FOR ALL MUELLER 110 COMPRESSION FITTINGS.
2. ALL SERVICE SADDLES SHALL HAVE RUBBER GASKET AND I.P. THREADS.

CITY OF DAVENPORT
DEPARTMENT OF PUBLIC WORKS

5/8" DUAL
METER SERVICE

APPROVED BY
CITY ENGINEER _____ DATE _____

REF	DWN	CKD	DATE	FILE
	ALB	JNL	10/15/09	FIG 4-03

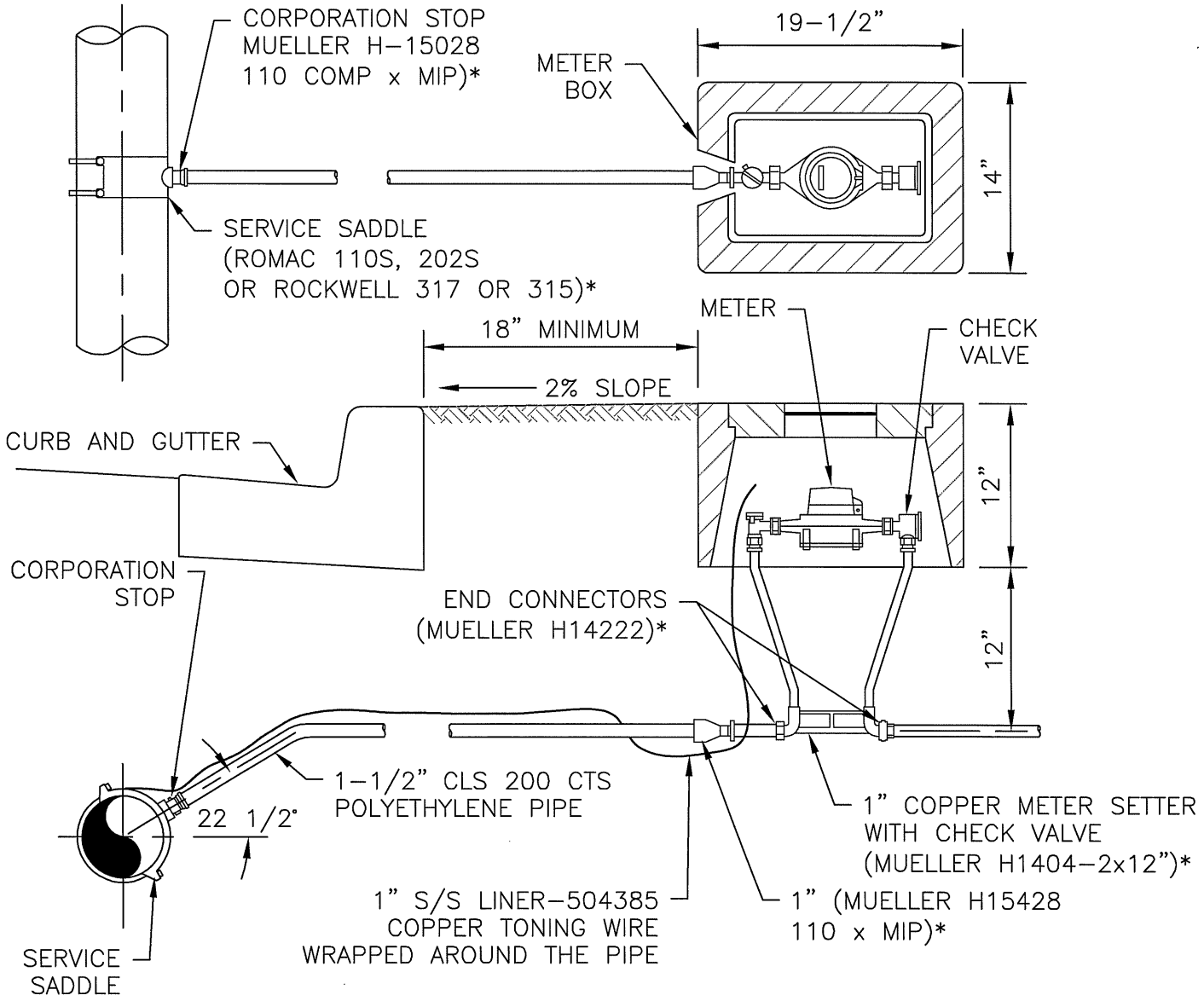

1 1" SINGLE METER SERVICE

NTS

* (OR APPROVED EQUAL)

ENVIRONMENT	METER BOX	LID TYPE
CONCRETE SIDEWALK	(BROOKS SERIES 36/65(2") CONCRETE OR CHRISTY B9X)*	CONCRETE
CONCRETE DRIVEWAY AND OTHER TRAFFIC AREAS	(BROOKS SERIES 36/65(2") CONCRETE OR FOGTITE I-D)*	CAST IRON TRAFFIC COVER
EARTH	(CARSON SERIES 1419-B PLASTIC)	*CARSON PLASTIC 1419 READER LID

NOTES:

1. STAINLESS STEEL INSERTS REQUIRED FOR ALL COMPRESSION FITTINGS.
2. ALL SERVICE SADDLES SHALL HAVE RUBBER GASKET AND I.P. THREADS.

CITY OF DAVENPORT
DEPARTMENT OF PUBLIC WORKS

1" SINGLE METER SERVICE

APPROVED BY
CITY ENGINEER _____ DATE _____

REF	DWN	CKD	DATE	FILE
	ALB	JNL	10/15/09	FIG 4-04

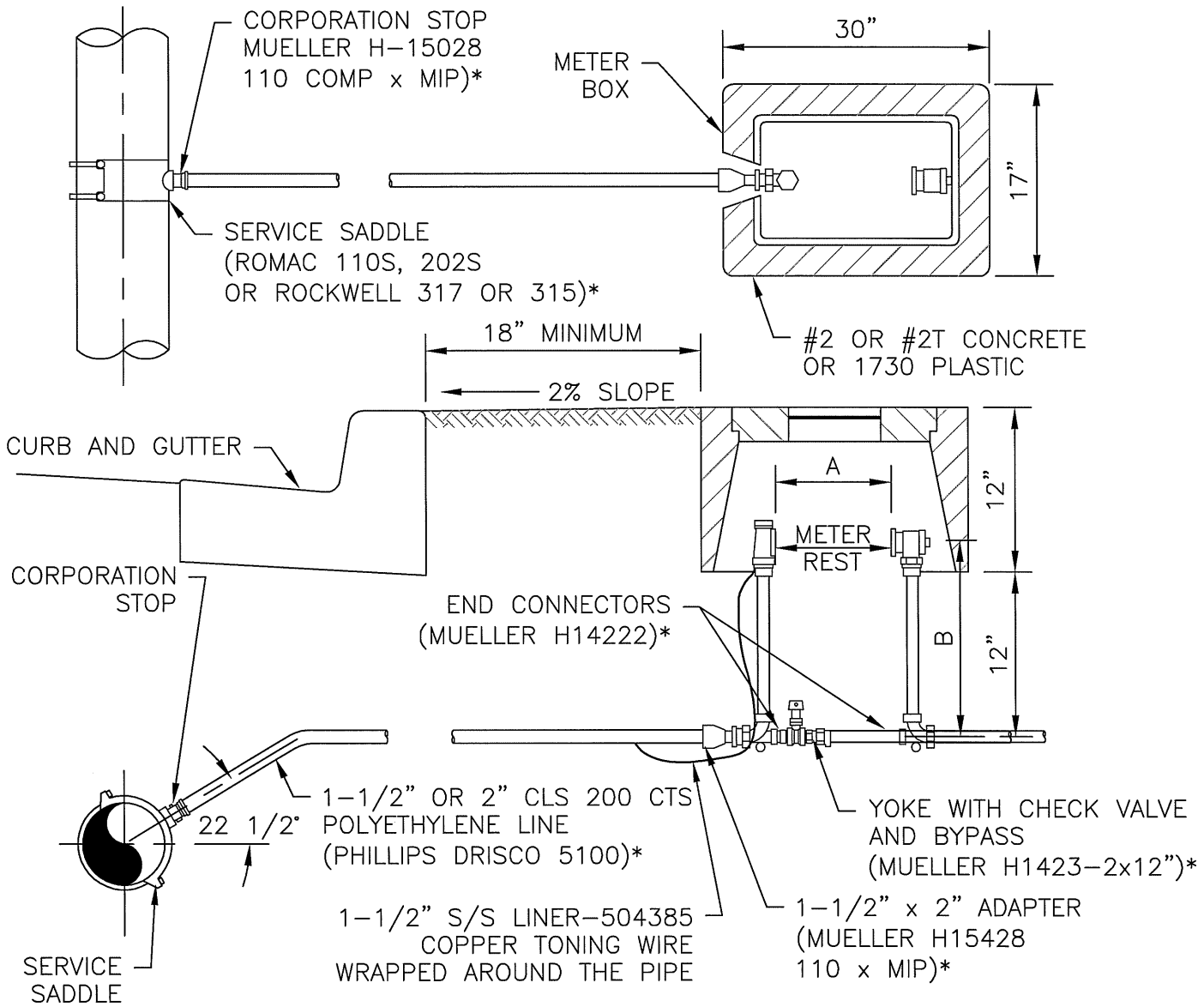

1 1" SINGLE METER SERVICE

NTS

* (OR APPROVED EQUAL)

SIZE	A	B
1-1/2"	13-1/4"	12"
2"	17-1/4"	12"

NOTES:

1. STAINLESS STEEL INSERTS REQUIRED FOR ALL COMPRESSION FITTINGS.
2. ALL SERVICE SADDLES SHALL HAVE RUBBER GASKET AND I.P. THREADS.
3. USE 2" IBBM A2380-B SCRD GATE VALVE 18" x 24" CLI VALVE BOX, 2" x CLS BRASS NIPPLE, 2" H15428 110 x MIP ADAPTER.

CITY OF DAVENPORT
DEPARTMENT OF PUBLIC WORKS

STANDARD COPPER SETTER WITH BYPASS

APPROVED BY
CITY ENGINEER _____ DATE _____

REF	DWN	CKD	DATE	FILE
	ALB	JNL	10/15/09	FIG 4-05

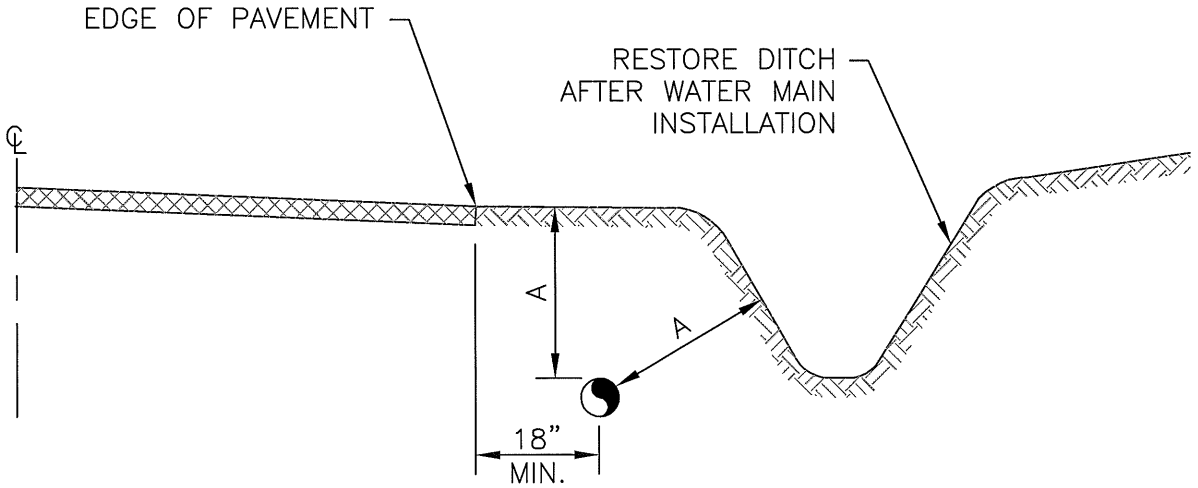

DITCH

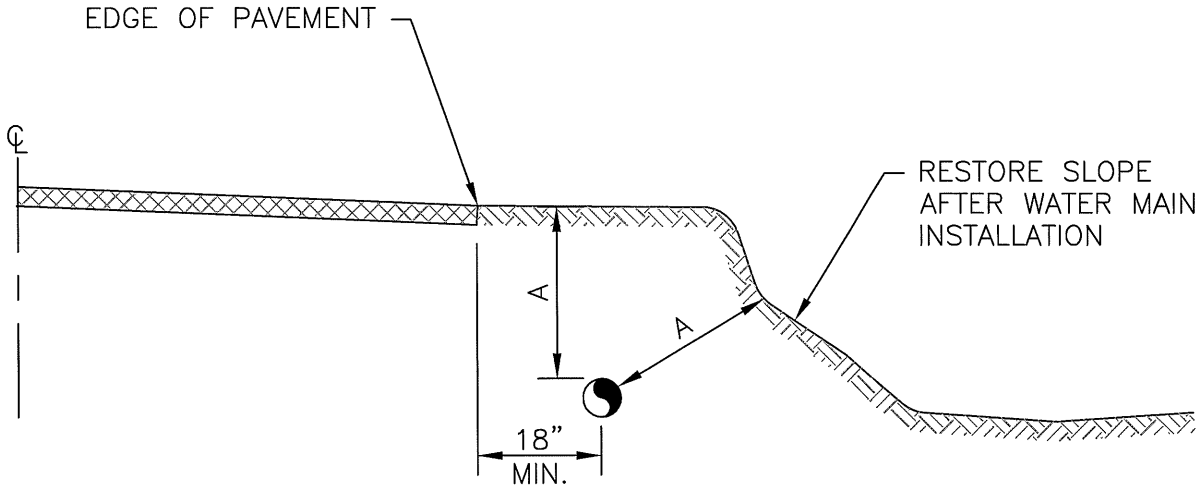

SLOPE

1 WATER MAIN DEPTH REQUIREMENTS

NTS

PIPE SIZE	A
6"–10"	36"
12"–18"	42"
20"& OVER	48"

CITY OF DAVENPORT
DEPARTMENT OF PUBLIC WORKS

WATER MAIN
DEPTH REQUIREMENTS

APPROVED BY
CITY ENGINEER _____ DATE _____

REF	DWN	CKD	DATE	FILE
	ALB	JNL	10/15/09	FIG 4–06

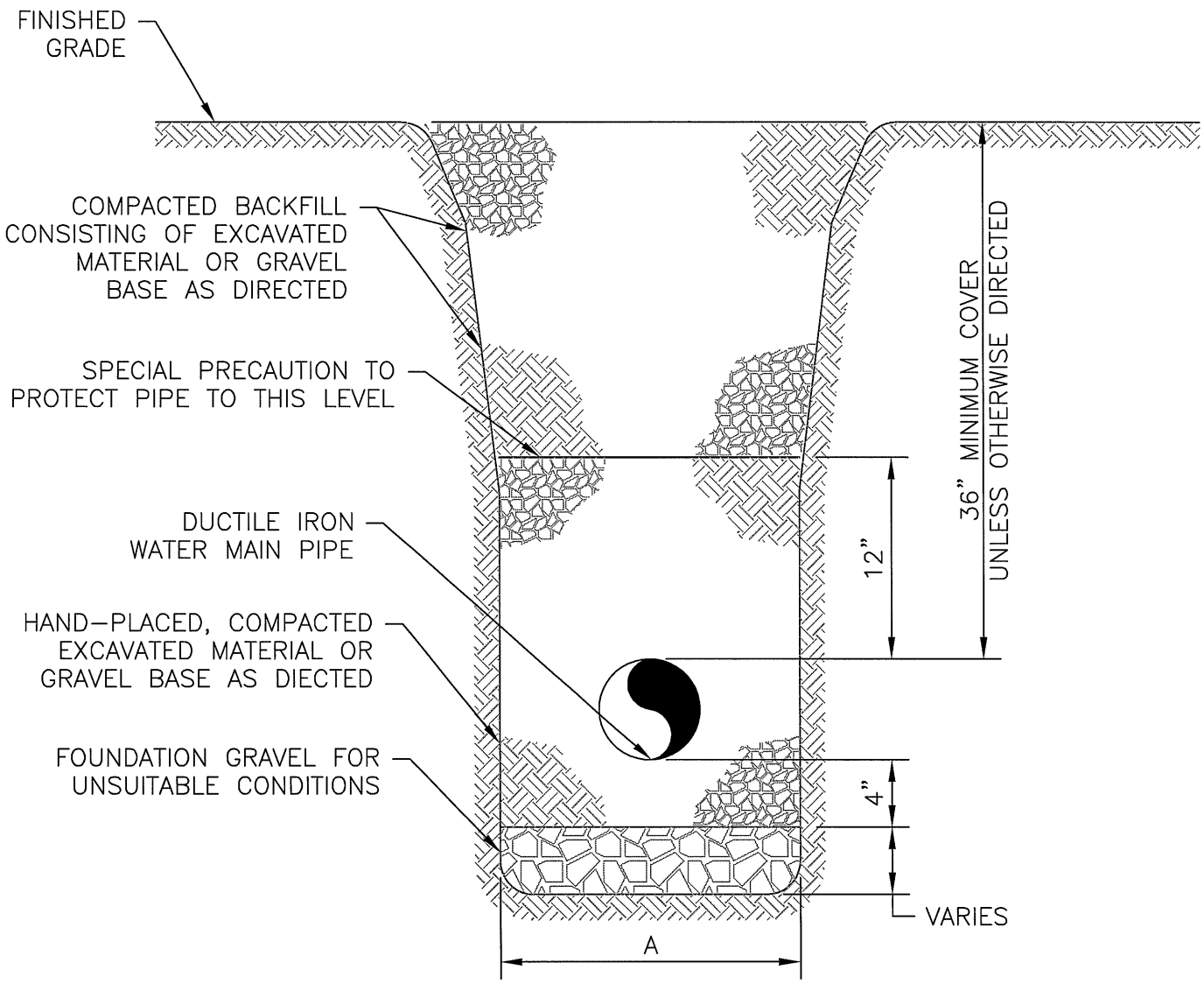

1 DUCTILE IRON WATER MAIN TRENCH SECTION

NTS

PIPE SIZE	A
6"	24"
8"	30"
10" & 12"	36"
16" AND 18"	42"

CITY OF DAVENPORT
DEPARTMENT OF PUBLIC WORKS

DUCTILE IRON WATER MAIN TRENCH SECTION

APPROVED BY
CITY ENGINEER _____ DATE _____

REF	DWN	CKD	DATE	FILE
	ALB	JNL	10/15/09	FIG 4–07

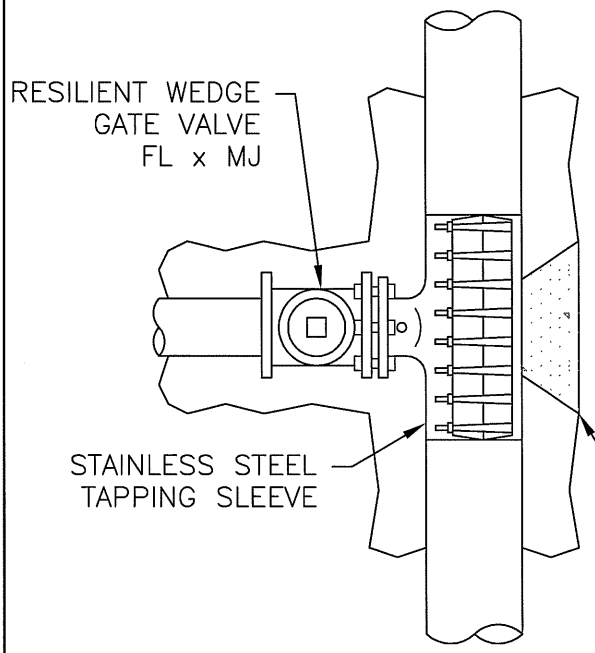

LIVE TAP

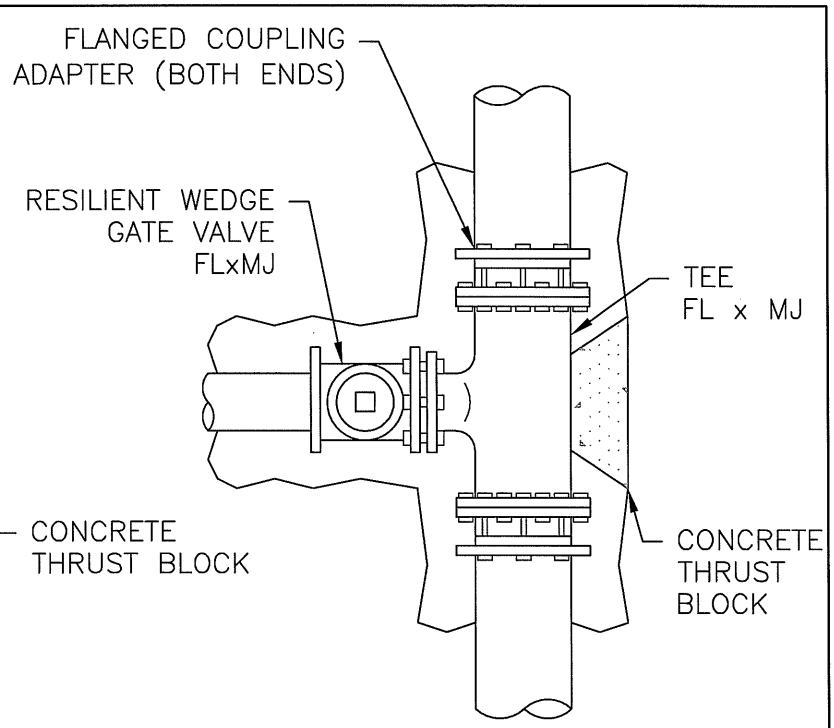

CUT-IN-TEE
TOP VIEW

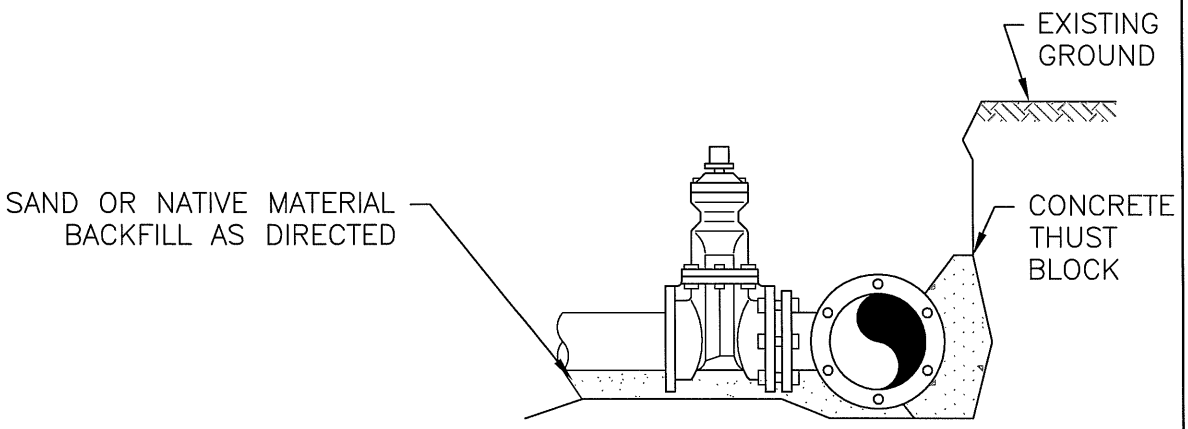

CUT-IN-TEE
SIDE VIEW

1 CONNECTION TO EXISTING MAIN

NTS

NOTE:
1. SUPPORT VALVE AND SLEEVE CONTINOUSLY THROUGH INSTALLATION.
2. 11 MIL PLASTIC OR CONSTRUCTION FABRIC SHALL BE WRAPPED AROUND PIPE AND FITTINGS BEFORE THRUST BLOCK AND BACKFILL ARE POURED.

CITY OF DAVENPORT
DEPARTMENT OF PUBLIC WORKS

CONNECTION TO
EXISTING MAIN

APPROVED BY
CITY ENGINEER _____ DATE _____

REF	DWN	CKD	DATE	FILE
	ALB	JNL	10/15/09	FIG 4-08

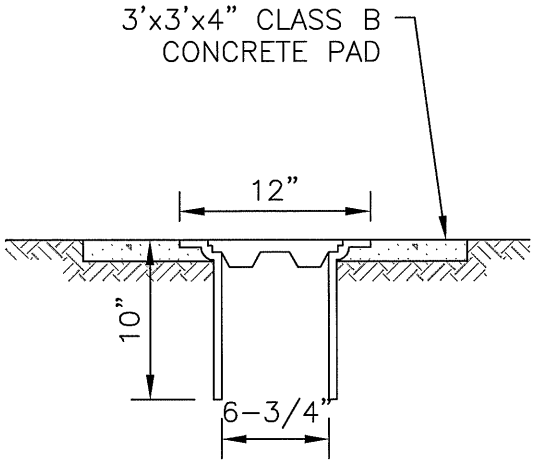

OUTSIDE PAVED AREA

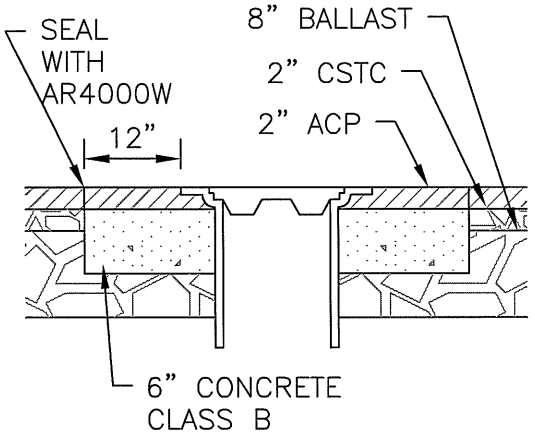

INSIDE PAVED AREA

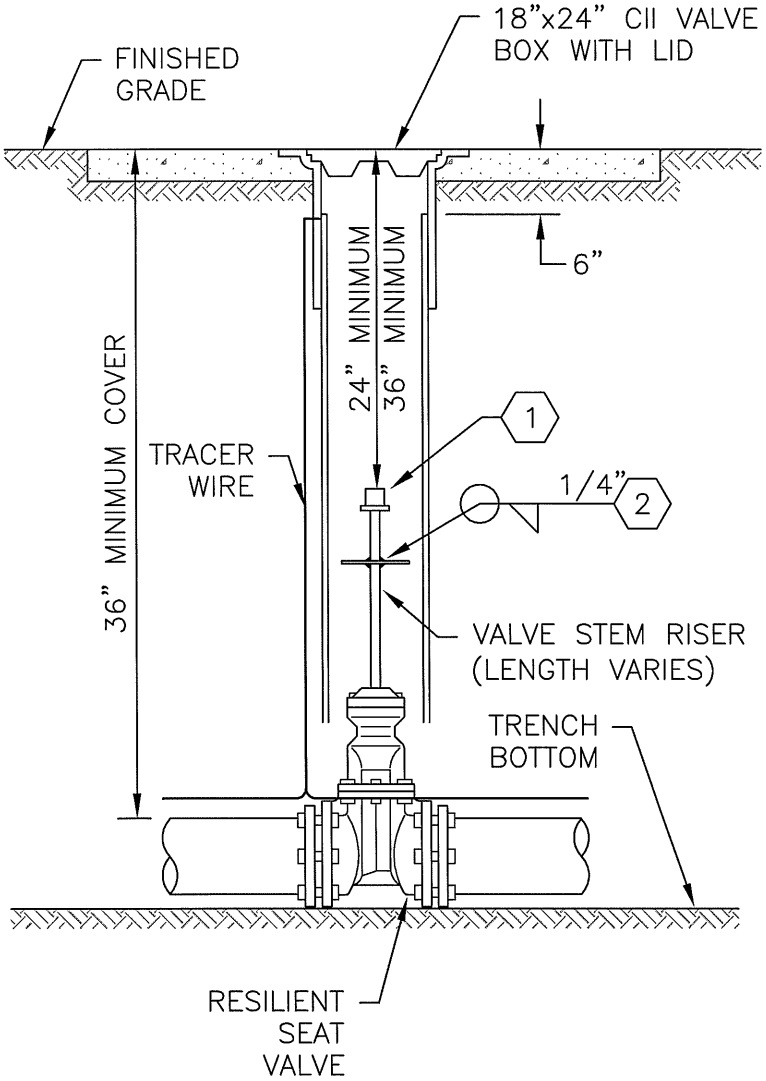

1 STANDARD VALVE BOX

NTS

NOTE:

1. 2" x 2" x 3/16" SQUARE STRUCTURAL STEEL TUBING USED TO FIT OPERATING NUT, LENGTH AS REQUIRED.

CONSTRUCTION NOTES:

1. VALVE OPERATING NUT OR 1-7/8" x 1-7/8" x 2" HIGH GRADE STEEL WELDED TO GUIDE PLATE.

2. 3/16" THICK x 5-1/5" DIAMETER STEEL GUIDE PLATE WELDED TO RISER SHAFT.

CITY OF DAVENPORT
DEPARTMENT OF PUBLIC WORKS

STANDARD
VALVE BOX

APPROVED BY
CITY ENGINEER _____ DATE _____

REF	DWN	CKD	DATE	FILE
	ALB	JNL	10/15/09	FIG 4-09

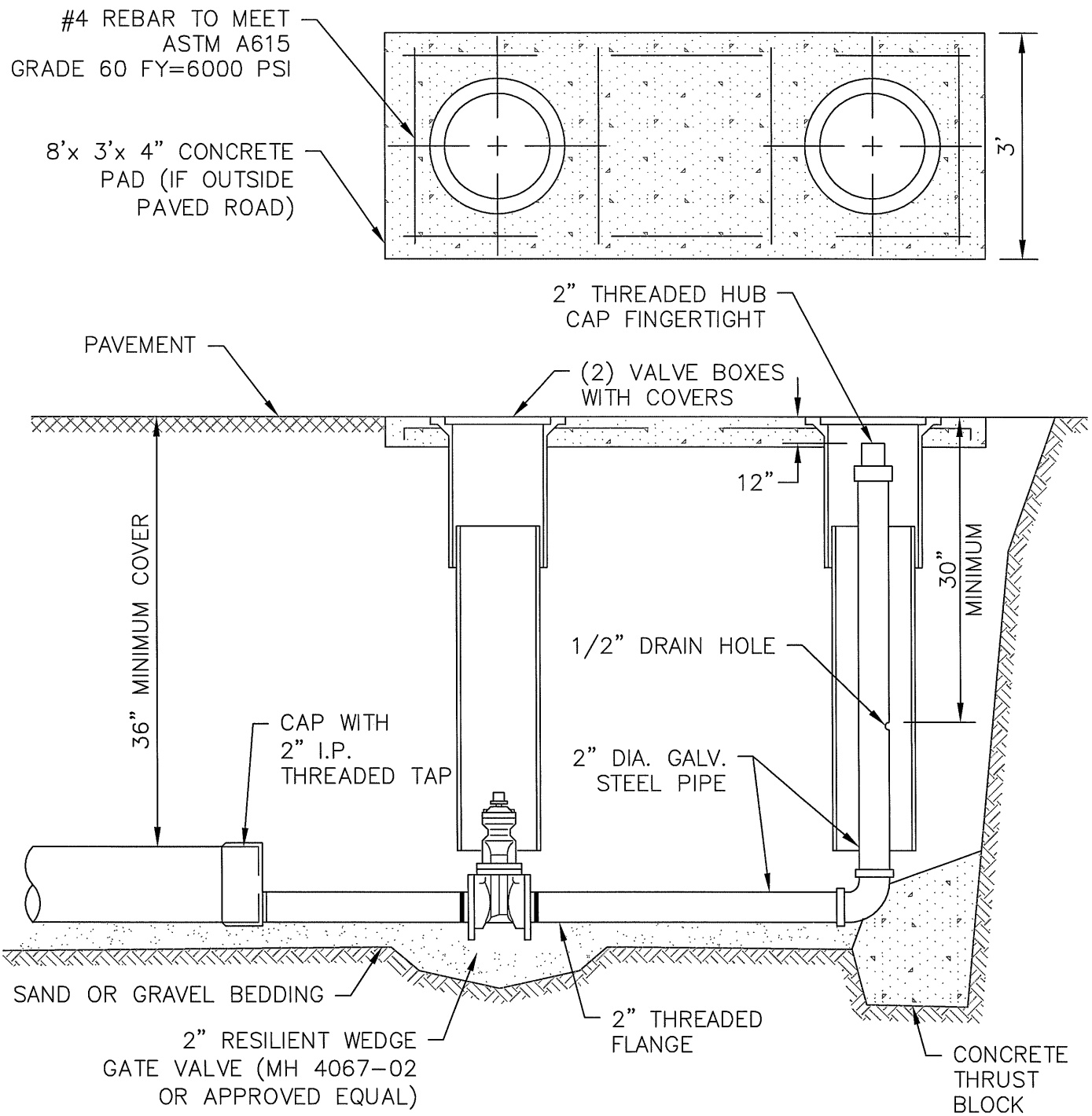

1 **2" BLOW OFF ASSEMBLY** NTS

NOTE:

1. ON WATERMAINS WHICH WILL BE EXTENDED IN THE FUTURE, THE VALVE WHICH OPERATES THE BLOWOFF ASSEMBLY SHALL BE THE SAME SIZE AND PROVIDED WITH A CONCRETE THRUST BLOCK.

CITY OF DAVENPORT
DEPARTMENT OF PUBLIC WORKS

2" BLOW OFF ASSEMBLY

APPROVED BY CITY ENGINEER _____ DATE _____

REF	DWN	CKD	DATE	FILE
	ALB	JNL	10/15/09	FIG 4-10

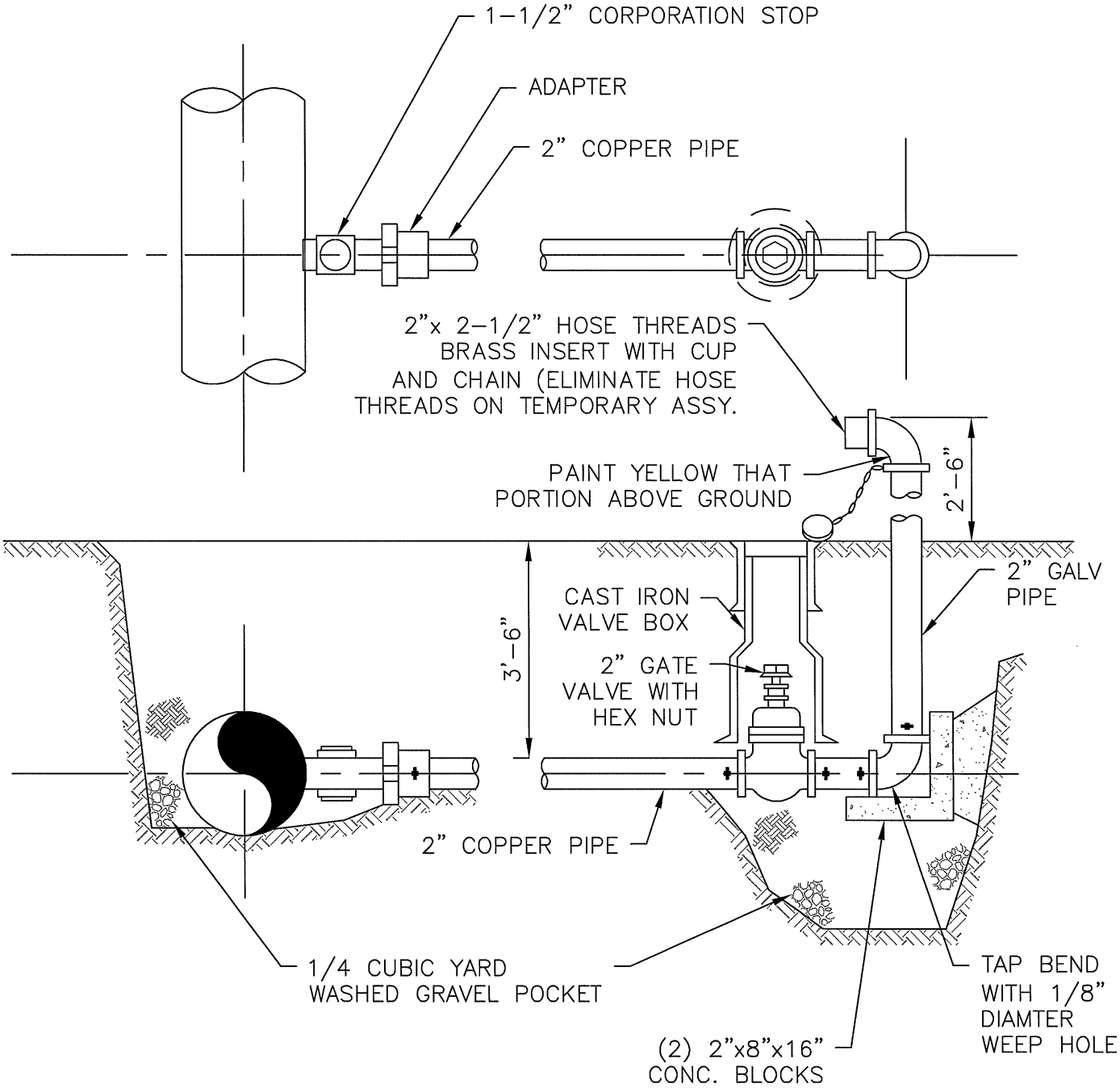

1 **IN-LINE BLOW-OFF ASSEMBLY** NTS

CITY OF DAVENPORT DEPARTMENT OF PUBLIC WORKS			
IN-LINE BLOW-OFF ASSEMBLY			
APPROVED BY CITY ENGINEER _____ DATE _____			
REF	DWN ALB	CKD JNL	DATE 10/15/09	FILE FIG 4-11

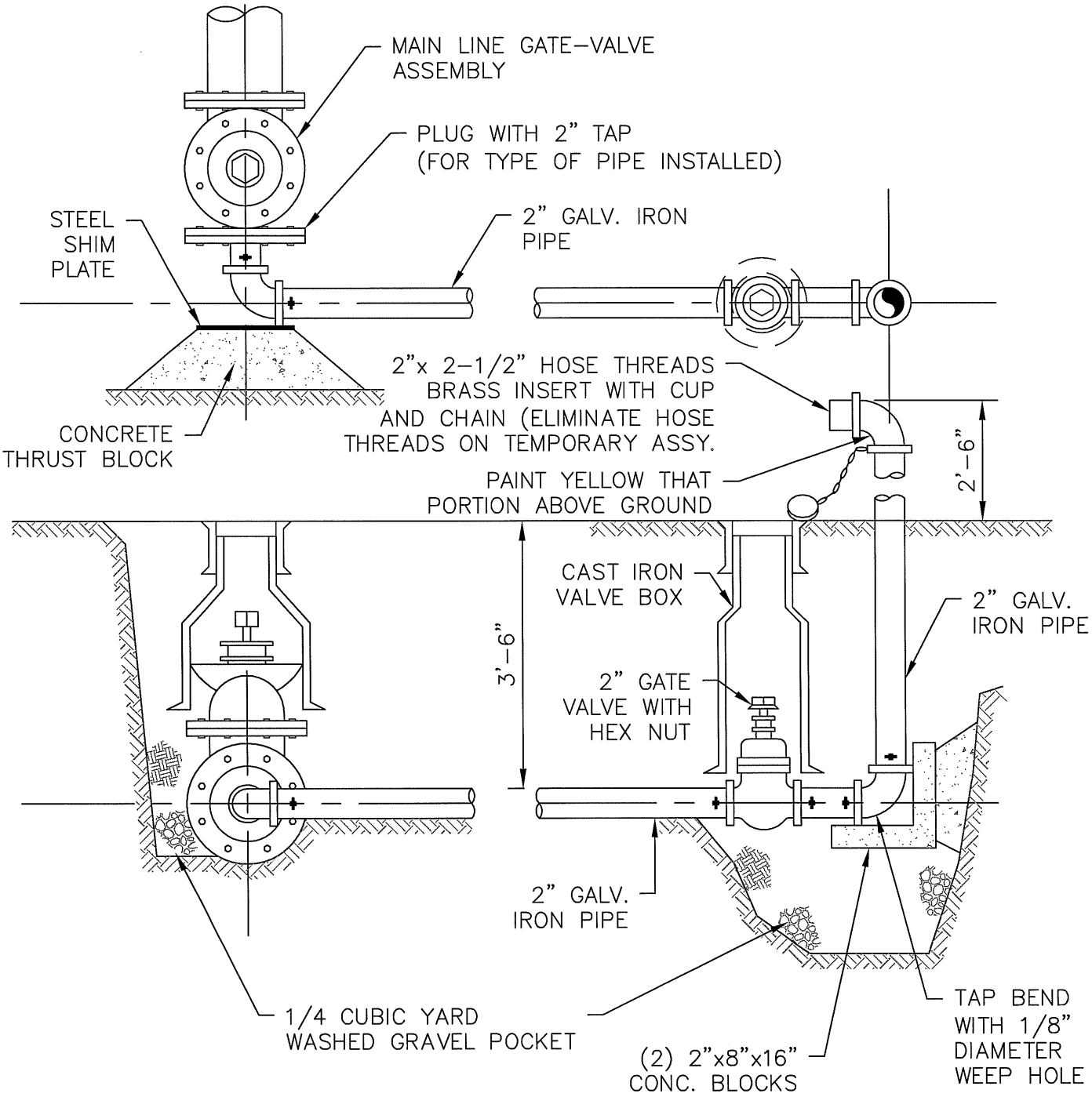

1 **END-LINE BLOW-OFF ASSEMBLY** NTS

CITY OF DAVENPORT DEPARTMENT OF PUBLIC WORKS			
END-LINE BLOW-OFF ASSEMBLY			
APPROVED BY CITY ENGINEER _____ DATE _____			
REF	DWN ALB	CKD JNL	DATE 10/15/09	FILE FIG 4-12

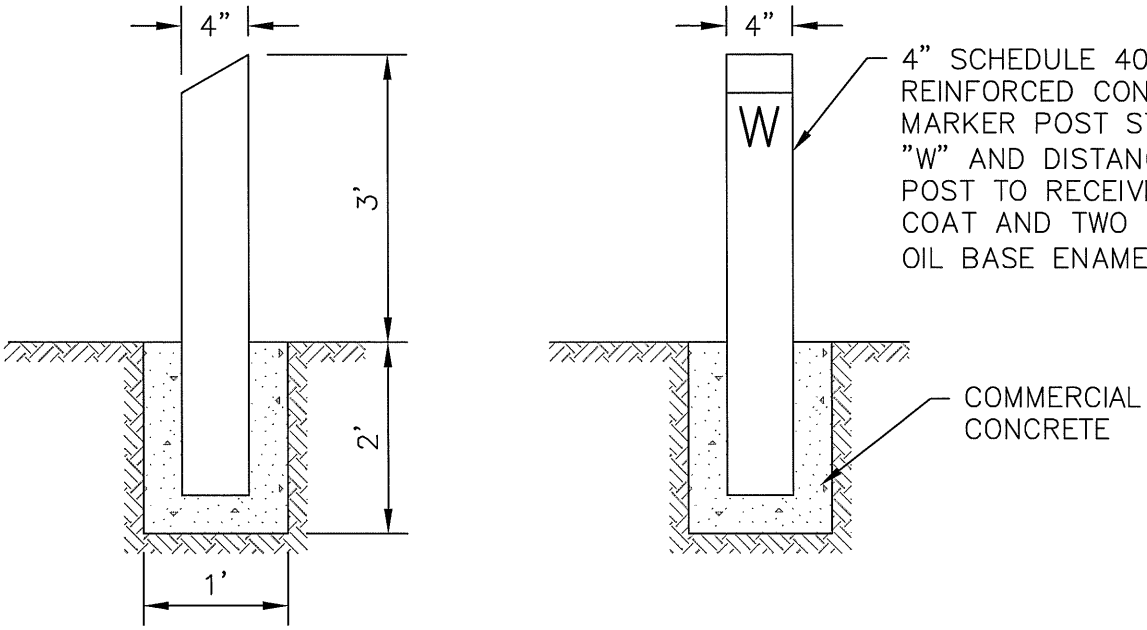

SIDE **FRONT**

VALVE MARKER POST

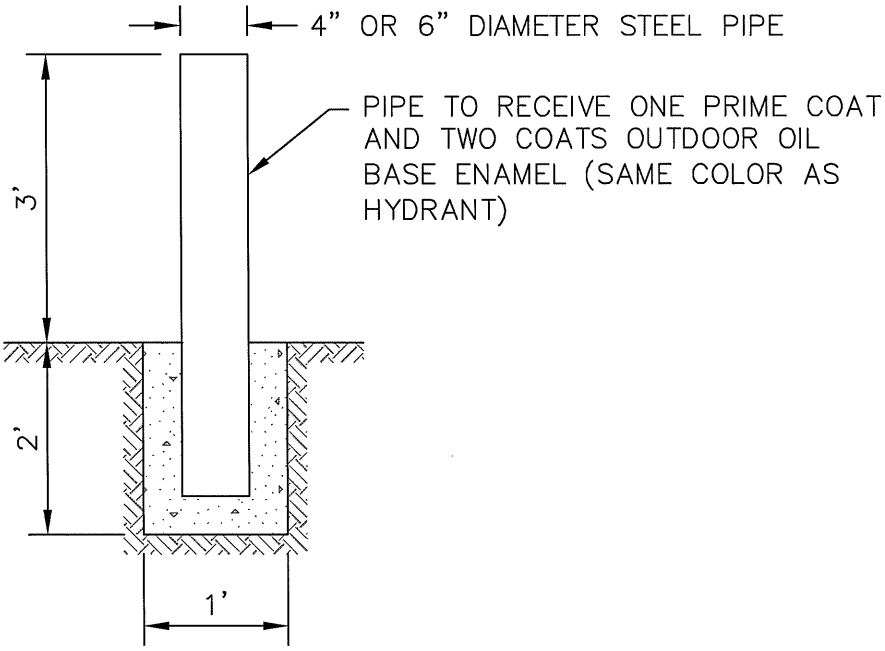

HYDRANT BOLLARD

1 VALVE MARKER POST AND HYDRANT BOLLARD NTS

NOTE:

1. LOCATE BOLLARDS 3' FROM HYDRANT. DO NOT BLOCK HYDRANT PORTS.

CITY OF DAVENPORT DEPARTMENT OF PUBLIC WORKS			
VALVE MARKER POST AND HYDRANT BOLLARD			
APPROVED BY CITY ENGINEER _____ DATE _____			
REF	DWN ALB	CKD JNL	DATE 10/15/09	FILE FIG 4–13

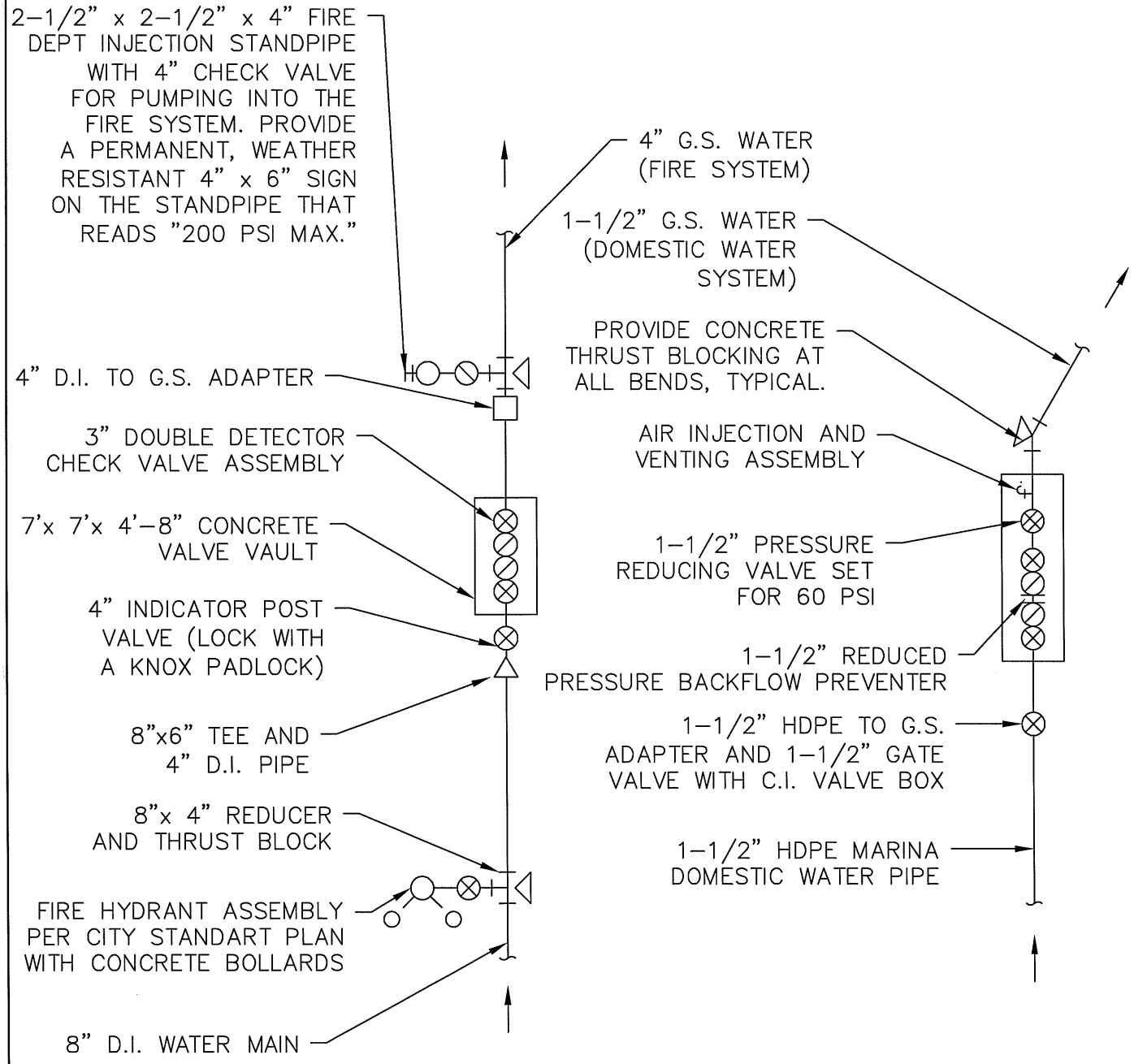

1 MARINA WATER CONTROL VAULTS

NTS

NOTE:

1. LOCATE BOLLARDS 3' FROM HYDRANT. DO NOT BLOCK HYDRANT PORTS.

CITY OF DAVENPORT
DEPARTMENT OF PUBLIC WORKS

MARINA WATER CONTROL VAULTS

APPROVED BY
CITY ENGINEER _____ DATE _____

REF	DWN	CKD	DATE	FILE
	ALB	JNL	10/15/09	FIG 4-14

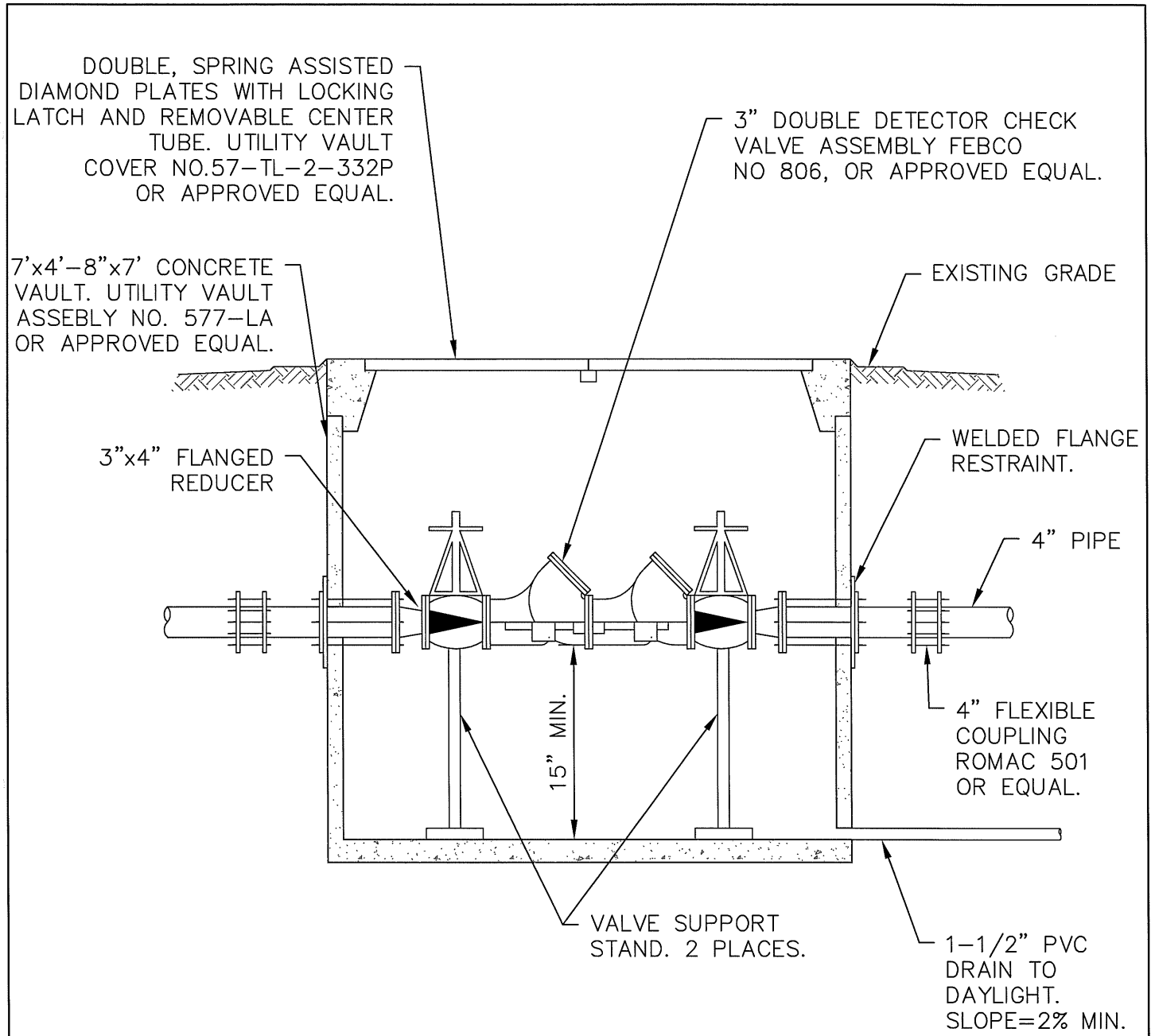

1 **DOUBLE DETECTOR CHECK VALVE** NTS

CITY OF DAVENPORT DEPARTMENT OF PUBLIC WORKS			
DOUBLE DETECTOR CHECK VALVE			
APPROVED BY CITY ENGINEER _____ DATE _____			
REF	DWN ALB	CKD JNL	DATE 10/15/09	FILE FIG 4-15

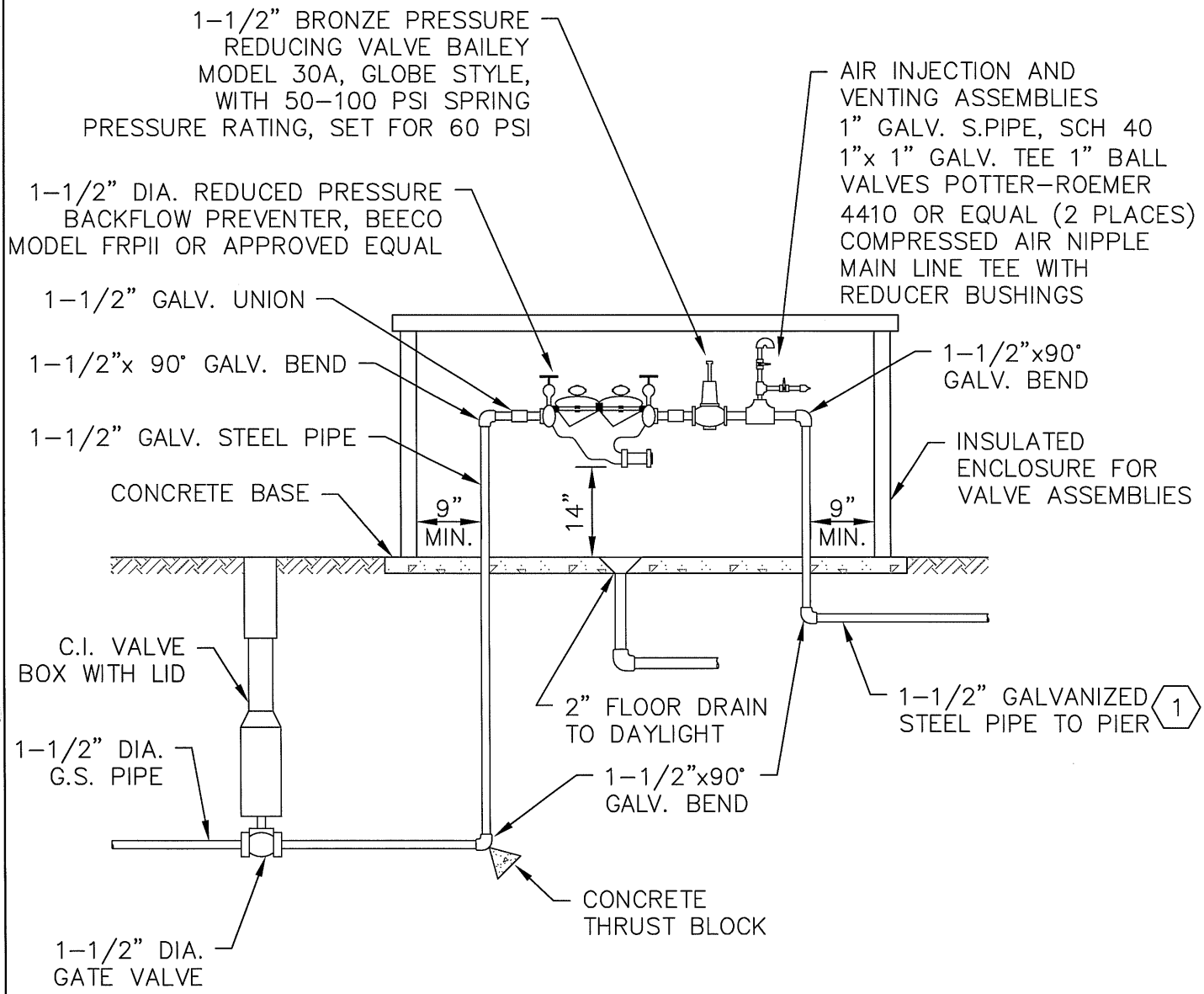

1 REDUCED PRESSURE BACKFLOW PREVENTER

NTS

NOTE:

1. THIS DETAIL IS INTENDED TO SHOW THE GENERAL ARRANGEMENT OF THE REQUIRED VALVES AND ACCESSORIES. IT IS NOT INTENDED TO PROVIDE COMPLETE PLUMBING DETAILS.

CONSTRUCTION NOTES:

1. MAINTAIN LEVEL PIPE TO END OF FIXED PIER OR PROVIDE AIR-VAC VALVE AT ANY HIGH POINTS AND DRAIN VALVE AT ANY LOW POINTS.

CITY OF DAVENPORT
DEPARTMENT OF PUBLIC WORKS

REDUCED PRESSURE BACKFLOW PREVENTER

APPROVED BY
CITY ENGINEER _____ DATE _____

REF	DWN	CKD	DATE	FILE
	ALB	JNL	10/15/09	FIG 4-16

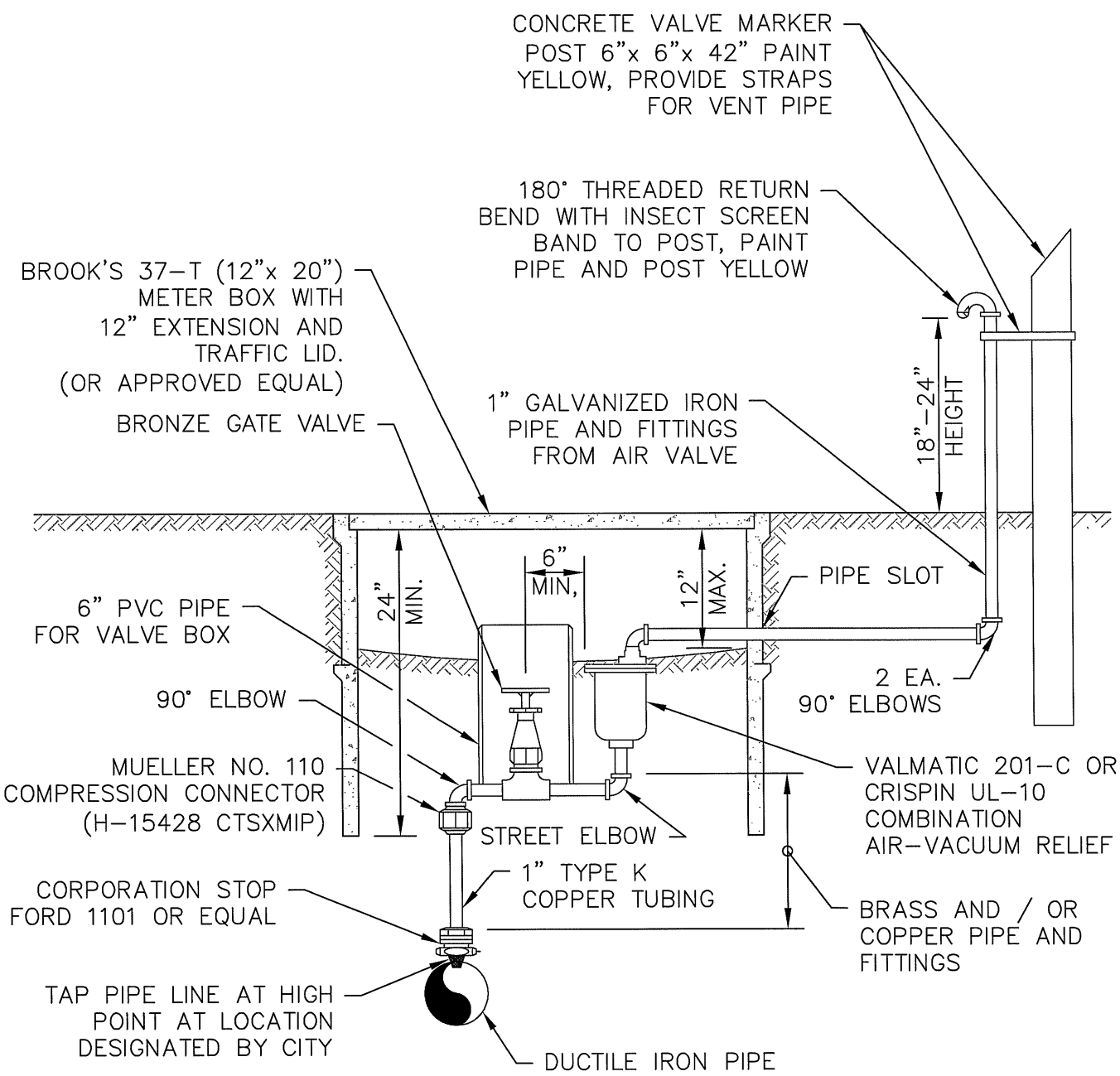

1 1" AIR AND VACUUM RELEASE ASSEMBLY

NTS

CITY OF DAVENPORT DEPARTMENT OF PUBLIC WORKS			
1" AIR AND VACUUM RELEASE ASSEMBLY			
APPROVED BY CITY ENGINEER _____ DATE _____			
REF	DWN ALB	CKD JNL	DATE 10/15/09	FILE FIG 4-17

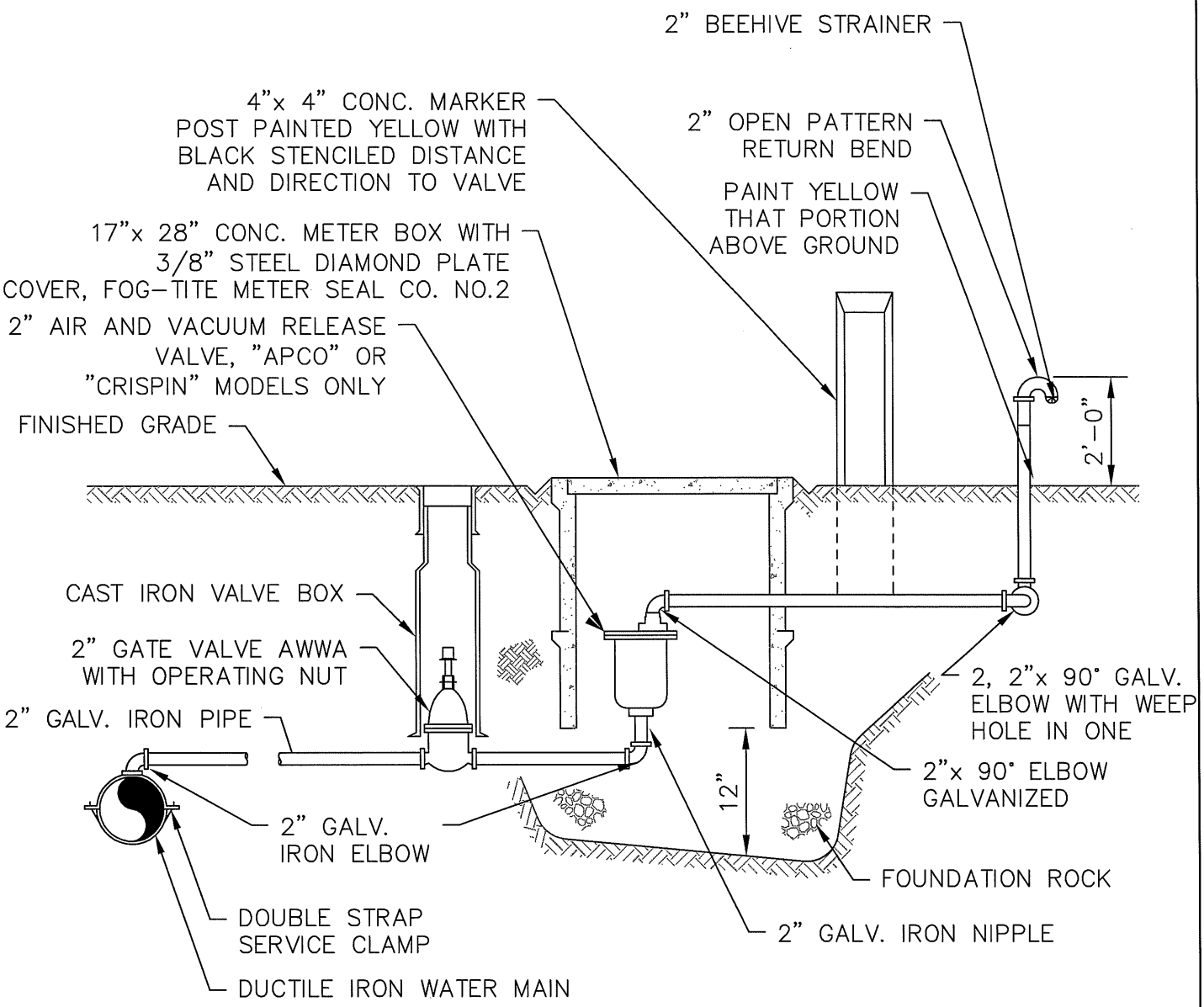

1 2" AIR AND VACUUM RELEASE ASSEMBLY

NTS

	CITY OF DAVENPORT DEPARTMENT OF PUBLIC WORKS			
	2" AIR AND VACUUM RELEASE ASSEMBLY			
	APPROVED BY CITY ENGINEER _____ DATE _____			
REF	DWN ALB	CKD JNL	DATE 10/15/09	FILE FIG 4-18

THRUST LOADS

THRUST AT FITTINGS IN POUNDS AT 200 POUNDS PER SQUARE INCH OF WATER PRESSURE

PIPE DIAMETER	90° BEND	45° BEND	22.5° BEND	11.25° BEND	DEAD END OR TEE
4"	3600	2000	1000	500	2600
6"	8000	4400	2300	1200	5700
8"	14300	7700	4000	2000	10100
10"	22300	12100	6200	3100	15800
12"	32000	17400	8900	4500	22700
14"	43600	23600	12100	6100	30800
16"	57000	30800	15700	7900	40300

NOTE:

1. BLOCKING SHALL BE COMMERCIAL CONCRETE POURED IN PLACE AGAINST UNDISTURBED EARTH. FITTING SHALL BE ISOLATED FROM CONCRETE THRUST BLOCK WITH PLASTIC OR SIMILAR MATERIAL.
2. TO DETERMINE THE BEARING AREA OF THE THRUST BLOCK IN SQUARE FEET (SF): EXAMPLE : 12" – 90° BEND IN SAND AND GRAVEL 32000 LBS / 3000 LB/SF = 10.7 SF OF AREA
3. AREAS MUST BE ADJUSTED FOR OTHER PIPE SIZE, PRESSURES AND SOIL CONDITIONS.
4. BLOCKING SHALL BE ADEQUATE TO WITHSTAND FULL TEST PRESSURE AS WELL AS TO CONTINUOUSLY WITHSTAND OPERATING PRESSURE UNDER ALL CONDITIONS OF SERVICE.

SAFE SOIL BEARING LOADS

FOR HORIZONTAL THRUSTS WHEN THE DEPTH OF COVER OVER THE PIPE EXCEEDS 2 FEET

SOIL	POUNDS PER SQUARE FOOT
MUCK, PEAT	0
SOFT CLAY	1000
SAND	2000
SAND AND GRAVEL	3000
SAND AND GRAVEL CEMENTED WITH CLAY	4000
HARD SHALE	10000

CITY OF DAVENPORT
DEPARTMENT OF PUBLIC WORKS

THRUST LOADS

APPROVED BY
CITY ENGINEER _____ DATE _____

REF	DWN	CKD	DATE	FILE
	ALB	JNL	10/15/09	FIG 4–19

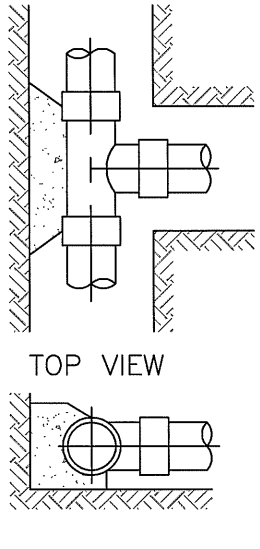

TEE

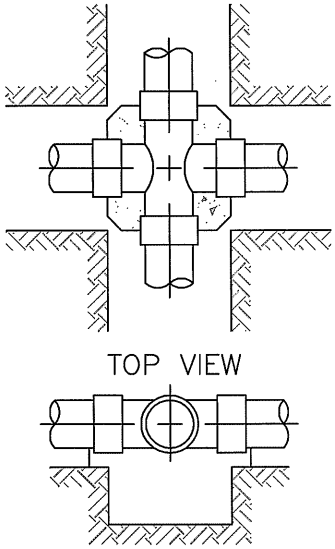

CROSS

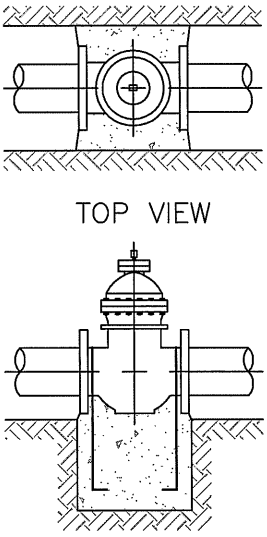

GATE VALVE

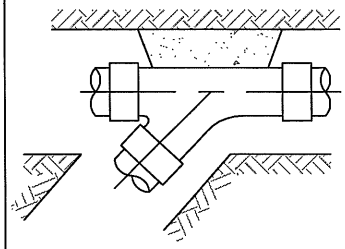

WYE

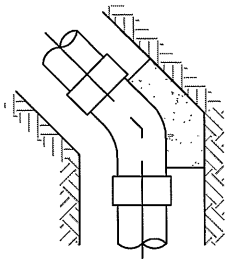

HORIZ. BEND

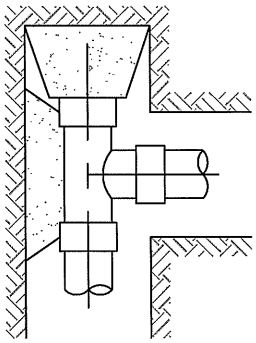

TEE WITH PLUG

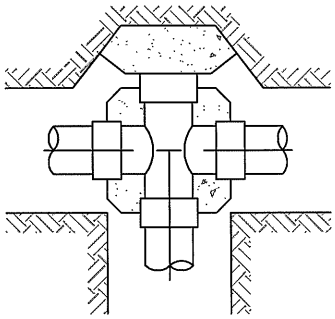

CROSS WITH PLUG

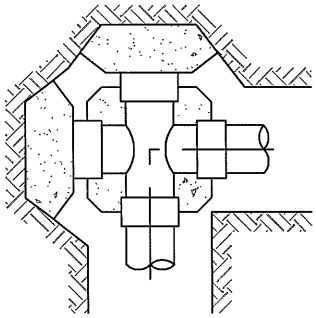

CROSS WITH PLUGS

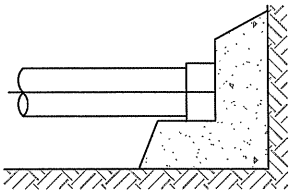

PLUG OR CAP

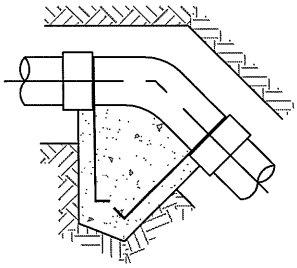

45° – 90° VERTICAL BEND

1 **STANDARD BLOCKING** NTS

NOTES:

1. CONCRETE THRUST BLOCKING TO BE POURED AGAINST UNDISTURBED EARTH.
2. PLASTIC BARRIER SHALL BE PLACED BETWEEN ALL THRUST BLOCKS AND FITTINGS.
3. ANCHOR REBAR SHALL BE 5/8" MINIMUM DIAMETER.

CITY OF DAVENPORT
DEPARTMENT OF PUBLIC WORKS

STANDARD BLOCKING

APPROVED BY
CITY ENGINEER _____ DATE _____

REF	DWN	CKD	DATE	FILE
	ALB	JNL	10/15/09	FIG 4–20

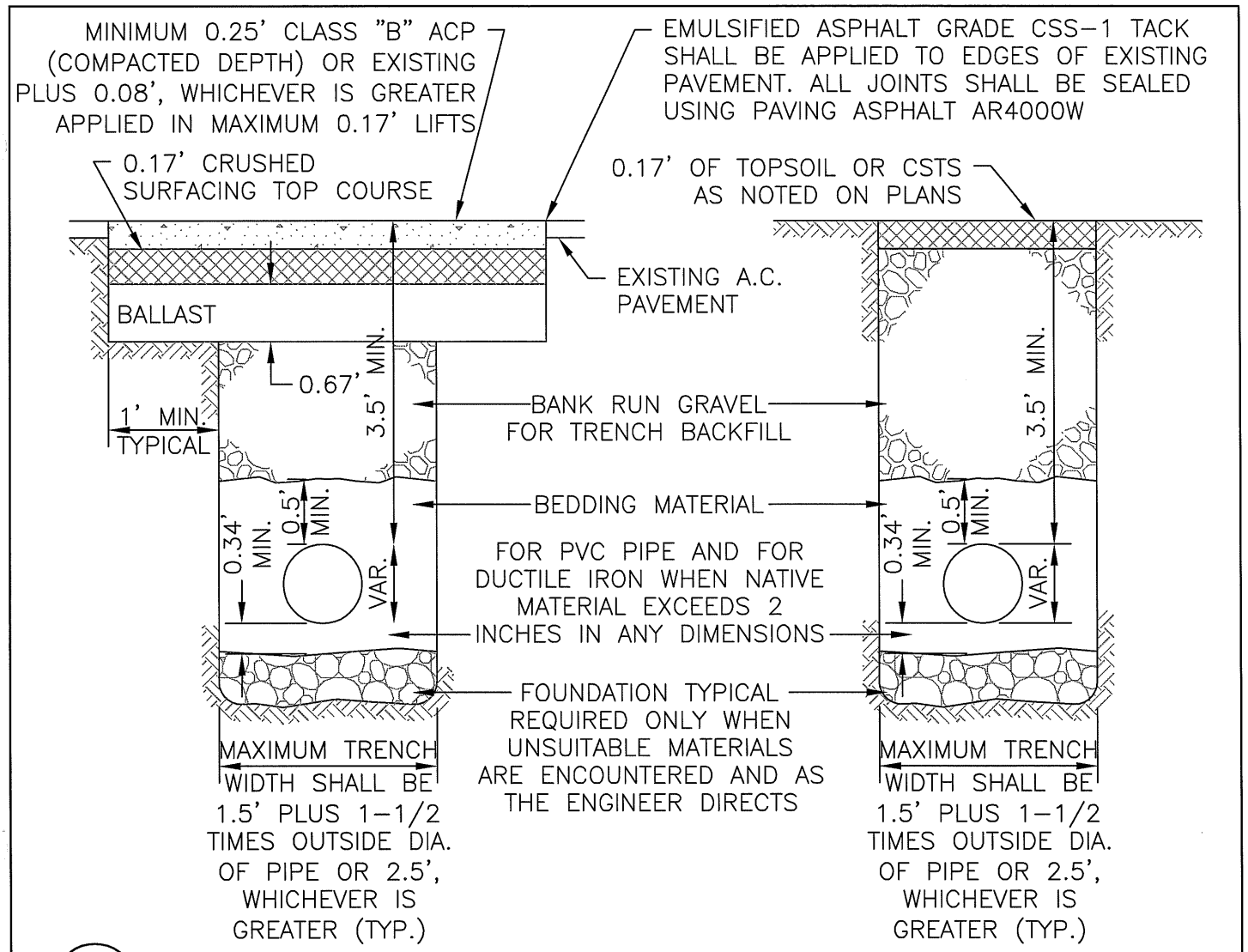

1 TRENCH – PAVEMENT RESTORATION

NTS

GENERAL NOTES:

1. ALL MATERIALS EXCEPT A.C.P. AND BEDDING MATERIAL SHALL BE COMPACTED IN 6" MAXIMUM LIFTS TO 95% DENSITY.
2. COMPACTION: BEDDING SHALL BE COMPACTED TO 95% MAX. AS DETERMINED BY ASTM D1557. BACKFILL SHALL BE COMPACTED TO 85% IN UNPAVED AREA, AND 95% IN PAVED OR SHOULDER AREAS AS DETERMINED BY ASTM D1557.
3. ALL MATERIALS, WORKMANSHIP, AND INSTALLATION SHALL BE IN CONFORMANCE WITH THE STANDARD SPECIFICATIONS FOR ROAD, BRIDGE AND MUNICIPAL CONSTRUCTION AS AMENDED BY CITY OF DAVENPORT STANARDS.
4. KEEP TRENCH BOTTOM COMPACTED WITH UNIFORM GRADE. A BELL JOINT SHALL BE REQUIRED AT EACH JOINT FOR PROPER SUPPORT, NO TEMPORARY SUPPORTS, I.E. BLOCKS, WILL BE ALLOWED TO SUPPORT PIPE. TRENCH BOTTOM SHALL BE TO GRADE PRIOR TO PIPE INSTALLATION,

CITY OF DAVENPORT
DEPARTMENT OF PUBLIC WORKS

TRENCH – PAVEMENT RESTORATION DETAILS

APPROVED BY
CITY ENGINEER _____ DATE _____

REF	DWN	CKD	DATE	FILE
	ALB	JNL	10/15/09	FIG 2-09

Appendix G WATERCAD MODELS

Modeling Demand Summary

CURRENT (2013) DEMANDS		
ADD = 467,424 gallons	= 325 gpm	= 0.92 gpm/node
MDD = 1,103,640 gallons	= 766 gpm	= 2.14 gpm/node
PHD = 1,404 gpm		= 3.97 gpm/node

6-YEAR (2019) DEMANDS		
ADD = 490,320 gallons	= 341 gpm	= 0.96 gpm/node
MDD = 1,157,700 gallons	= 804 gpm	= 2.27 gpm/node
PHD = 1,464 gpm		= 4.14 gpm/node

20-YEAR (2033) DEMANDS		
ADD = 547,776 gallons	= 381 gpm	= 1.07 gpm/node
MDD = 1,293,360 gallons	= 898 gpm	= 2.54 gpm/node
PHD = 1,614 gpm		= 4.56 gpm/node

Assumes 354 Nodes Total
Based on Annual Population Growth Rate of 0.8%

MDD for Existing System- Current (2013)

ID	Label	Elevation (ft)	Demand (gpm)	Hydraulic Grade (ft)	Pressure (psi)
56	161	2,427.00	2.17	2,507.05	34.7
57	159	2,417.00	2.17	2,510.58	40.6
58	158	2,418.00	2.17	2,510.61	40.1
59	157	2,429.88	2.17	2,511.43	35.4
61	112	2,427.06	2.17	2,512.56	37.1
62	110	2,417.00	2.17	2,512.12	41.2
63	109	2,416.00	2.17	2,510.77	41.1
64	106	2,416.00	2.17	2,510.92	41.1
65	155	2,409.00	2.17	2,510.44	44.0
66	154	2,406.00	2.17	2,510.28	45.2
67	153	2,421.00	2.17	2,510.69	38.9
68	152	2,422.00	2.17	2,510.69	38.4
69	151	2,417.00	2.17	2,509.84	40.2
70	150	2,418.00	2.17	2,509.87	39.8
71	149	2,416.00	2.17	2,509.87	40.7
72	148	2,400.00	2.17	2,509.21	47.3
73	147	2,396.00	2.17	2,509.21	49.1
74	146	2,391.00	2.17	2,509.21	51.2
77	143	2,401.00	2.17	2,507.80	46.3
78	142	2,428.32	2.17	2,507.71	34.4
79	141	2,370.91	2.17	2,508.66	59.7
80	140	2,371.01	2.17	2,508.79	59.7
81	139	2,403.01	2.17	2,508.55	45.8
82	138	2,394.50	2.17	2,508.55	49.4
83	137	2,388.32	2.17	2,508.55	52.1
84	136	2,394.74	2.17	2,508.55	49.3
85	135	2,388.00	2.17	2,508.72	52.3
86	134	2,387.71	2.17	2,508.69	52.4
87	133	2,386.48	2.17	2,508.67	53.0
88	132	2,379.27	2.17	2,508.63	56.1
89	131	2,388.39	2.17	2,508.57	52.1
90	130	2,378.79	2.17	2,508.53	56.2
91	129	2,369.89	2.17	2,508.58	60.1
92	128	2,374.49	2.17	2,508.64	58.2
93	127	2,372.49	2.17	2,508.68	59.0
94	126	2,400.00	2.17	2,508.57	47.1
97	121	2,427.00	2.17	2,507.08	34.7
98	119	2,414.23	2.17	2,507.42	40.4
99	114	2,394.19	2.17	2,508.24	49.4
100	105	2,412.32	2.17	2,507.78	41.4
101	115	2,396.83	2.17	2,507.86	48.1
103	120	2,414.64	2.17	2,512.65	42.5
106	108	2,396.89	2.17	2,508.52	48.4
107	107	2,372.41	2.17	2,508.69	59.1
108	104	2,396.00	2.17	2,509.63	49.3

MDD for Existing System- Current (2013)

ID	Label	Elevation (ft)	Demand (gpm)	Hydraulic Grade (ft)	Pressure (psi)
109	103	2,394.29	2.17	2,509.77	50.1
110	102	2,420.77	2.17	2,510.18	38.8
111	101	2,425.37	2.17	2,512.52	37.8
112	100	2,417.00	2.17	2,512.42	41.4
113	99	2,417.00	2.17	2,512.12	41.2
114	98	2,417.00	2.17	2,511.74	41.1
115	97	2,417.00	2.17	2,511.74	41.1
116	96	2,413.00	2.17	2,510.92	42.5
117	95	2,428.08	2.17	2,512.59	36.6
118	94	2,415.43	2.17	2,512.86	42.2
119	93	2,417.00	2.17	2,512.36	41.3
120	92	2,415.00	2.17	2,511.06	41.6
121	91	2,410.00	2.17	2,510.75	43.7
122	90	2,409.00	2.17	2,510.73	44.1
123	89	2,408.00	2.17	2,510.40	44.4
124	88	2,408.00	2.17	2,509.86	44.2
125	87	2,406.00	2.17	2,509.92	45.0
126	86	2,405.00	2.17	2,510.19	45.6
127	85	2,416.00	2.17	2,511.05	41.2
128	84	2,418.00	2.17	2,511.63	40.6
129	83	2,423.14	2.17	2,512.03	38.5
130	82	2,429.70	2.17	2,512.32	35.8
131	81	2,429.70	2.17	2,512.46	35.9
132	80	2,427.43	2.17	2,511.67	36.5
133	79	2,430.08	2.17	2,511.43	35.3
135	77	2,428.74	2.17	2,511.41	35.8
136	76	2,421.00	2.17	2,511.00	39.0
137	75	2,408.00	2.17	2,510.29	44.3
138	74	2,406.00	2.17	2,510.10	45.1
139	73	2,400.00	2.17	2,509.83	47.6
140	72	2,397.64	2.17	2,509.77	48.6
142	70	2,398.00	2.17	2,509.71	48.4
144	68	2,428.67	2.17	2,510.28	35.4
145	67	2,427.18	2.17	2,510.28	36.0
146	66	2,434.30	2.17	2,510.30	32.9
147	65	2,434.96	2.17	2,510.29	32.7
148	64	2,428.91	2.17	2,510.41	35.3
149	63	2,424.34	2.17	2,510.51	37.4
150	62	2,427.70	2.17	2,510.51	35.9
152	60	2,425.43	2.17	2,510.91	37.1
153	59	2,422.86	2.17	2,511.09	38.2
154	58	2,427.00	2.17	2,510.32	36.1
155	57	2,412.00	2.17	2,509.86	42.4
156	56	2,408.00	2.17	2,509.84	44.2
157	55	2,404.00	2.17	2,509.63	45.8

MDD for Existing System- Current (2013)

ID	Label	Elevation (ft)	Demand (gpm)	Hydraulic Grade (ft)	Pressure (psi)
158	54	2,395.00	2.17	2,509.63	49.7
160	52	2,394.18	2.17	2,509.73	50.1
161	51	2,398.00	2.17	2,509.71	48.4
162	50	2,420.00	2.17	2,509.87	39.0
163	49	2,415.00	2.17	2,509.74	41.1
164	48	2,414.00	2.17	2,509.77	41.5
165	47	2,407.00	2.17	2,509.47	44.4
166	46	2,395.00	2.17	2,509.47	49.6
168	44	2,394.00	2.17	2,509.42	50.0
169	43	2,396.00	2.17	2,508.65	48.8
170	42	2,392.00	2.17	2,508.65	50.6
171	41	2,407.61	2.17	2,510.16	44.5
172	40	2,408.61	2.17	2,509.82	43.9
173	39	2,413.00	2.17	2,509.52	41.8
174	38	2,404.74	2.17	2,509.60	45.5
175	37	2,398.00	2.17	2,509.43	48.3
176	36	2,403.68	2.17	2,509.43	45.8
177	35	2,400.33	2.17	2,509.21	47.2
178	34	2,403.22	2.17	2,509.21	45.9
179	33	2,389.97	2.17	2,509.14	51.7
180	32	2,388.75	2.17	2,509.06	52.2
181	31	2,381.40	2.17	2,508.74	55.2
182	30	2,373.78	2.17	2,508.69	58.5
183	29	2,373.10	2.17	2,508.69	58.8
184	28	2,397.29	2.17	2,507.86	47.9
186	26	2,391.00	2.17	2,509.19	51.2
187	25	2,389.00	2.17	2,508.34	51.7
188	24	2,383.53	2.17	2,508.63	54.2
189	23	2,383.89	2.17	2,508.61	54.1
190	22	2,373.26	2.17	2,508.69	58.7
191	21	2,374.00	2.17	2,508.82	58.4
192	20	2,392.67	2.17	2,508.72	50.3
193	19	2,405.78	2.17	2,508.66	44.6
194	18	2,403.98	2.17	2,508.66	45.4
195	17	2,411.80	2.17	2,508.54	41.9
196	16	2,401.06	2.17	2,508.54	46.6
197	15	2,404.00	2.17	2,507.77	45.0
198	14	2,426.00	2.17	2,507.88	35.5
199	13	2,429.50	2.17	2,507.98	34.0
200	12	2,428.00	2.17	2,508.02	34.7
201	11	2,421.00	2.17	2,508.24	37.8
203	9	2,426.00	2.17	2,507.08	35.2
204	8	2,363.33	2.17	2,507.95	62.7
205	7	2,371.87	2.17	2,507.95	59.0
207	5	2,408.14	2.17	2,507.46	43.1

MDD for Existing System- Current (2013)

ID	Label	Elevation (ft)	Demand (gpm)	Hydraulic Grade (ft)	Pressure (psi)
208	4	2,404.51	2.17	2,508.31	45.0
209	3	2,409.16	2.17	2,508.05	42.9
210	2	2,418.65	2.17	2,507.98	38.7
211	1	2,415.67	2.17	2,507.98	40.0
423	J-2	2,433.00	2.17	2,512.56	34.5
425	J-3	2,434.00	2.17	2,512.55	34.1
427	J-4	2,433.00	2.17	2,512.55	34.5
431	J-6	2,427.00	2.17	2,512.55	37.1
436	J-8	2,475.00	2.17	2,507.06	13.9
438	J-9	2,476.00	2.17	2,507.06	13.5
440	J-10	2,427.00	2.17	2,507.06	34.7
442	J-11	2,418.00	2.17	2,507.06	38.6
444	J-12	2,417.00	2.17	2,507.07	39.0
446	J-13	2,417.00	2.17	2,507.07	39.0
457	J-19	2,363.00	2.17	2,507.95	62.8
459	J-20	2,421.00	2.17	2,507.98	37.7
461	J-21	2,410.72	2.17	2,507.99	42.2
464	J-22	2,365.00	2.17	2,507.97	62.0
466	J-23	2,406.00	2.17	2,507.34	43.9
468	J-24	2,405.00	2.17	2,507.32	44.4
470	J-25	2,415.00	2.17	2,507.24	40.0
472	J-26	2,427.00	2.17	2,507.09	34.7
483	J-29	2,406.00	2.17	2,507.77	44.1
485	J-30	2,418.00	2.17	2,507.76	38.9
487	J-31	2,414.00	2.17	2,507.76	40.6
489	J-32	2,410.00	2.17	2,507.76	42.4
493	J-33	2,401.00	2.17	2,507.79	46.3
496	J-35	2,429.95	2.17	2,507.99	33.8
500	J-36	2,397.00	2.17	2,509.49	48.8
504	J-37	2,397.00	2.17	2,507.87	48.1
505	J-38	2,396.00	2.17	2,508.27	48.7
506	J-39	2,396.00	2.17	2,508.45	48.7
511	J-40	2,393.00	2.17	2,509.23	50.4
514	J-41	2,396.00	2.17	2,509.21	49.1
516	J-42	2,399.00	2.17	2,509.66	48.0
519	J-43	2,394.00	2.17	2,509.65	50.1
521	J-44	2,399.00	2.17	2,509.75	48.0
523	J-45	2,402.00	2.17	2,509.76	46.7
526	J-46	2,405.00	2.17	2,509.73	45.4
528	J-47	2,398.00	2.17	2,509.61	48.4
531	J-48	2,400.00	2.17	2,509.58	47.5
533	J-49	2,402.00	2.17	2,509.86	46.8
536	J-50	2,400.00	2.17	2,509.82	47.6
538	J-51	2,403.00	2.17	2,509.87	46.3
541	J-52	2,405.00	2.17	2,509.85	45.5

MDD for Existing System- Current (2013)

ID	Label	Elevation (ft)	Demand (gpm)	Hydraulic Grade (ft)	Pressure (psi)
543	J-53	2,409.00	2.17	2,509.84	43.7
545	J-54	2,405.00	2.17	2,509.96	45.5
548	J-55	2,406.00	2.17	2,509.92	45.1
550	J-56	2,414.00	2.17	2,511.19	42.1
552	J-57	2,415.00	2.17	2,511.27	41.7
554	J-58	2,416.00	2.17	2,511.46	41.4
556	J-59	2,416.00	2.17	2,511.55	41.4
560	J-60	2,424.26	2.17	2,510.72	37.5
563	J-61	2,427.00	2.17	2,510.64	36.3
565	J-62	2,427.00	2.17	2,510.60	36.2
567	J-63	2,427.00	2.17	2,510.57	36.2
570	J-64	2,429.09	2.17	2,510.40	35.3
573	J-65	2,433.00	2.17	2,510.40	33.6
575	J-66	2,431.00	2.17	2,510.36	34.4
577	J-67	2,428.85	2.17	2,511.41	35.8
580	J-68	2,417.24	2.17	2,513.09	41.6
586	J-70	2,420.00	2.17	2,513.26	40.4
593	J-73	2,416.00	2.17	2,511.77	41.5
602	J-76	2,417.00	2.17	2,512.55	41.4
604	J-77	2,417.00	2.17	2,512.51	41.4
612	J-80	2,421.00	2.17	2,511.81	39.4
614	J-81	2,421.00	2.17	2,511.77	39.4
617	J-82	2,401.00	2.17	2,509.18	46.9
621	J-83	2,387.00	2.17	2,509.12	52.9
624	J-84	2,415.00	2.17	2,509.60	41.0
627	J-85	2,398.00	2.17	2,509.37	48.3
630	J-86	2,401.00	2.17	2,509.25	46.9
632	J-87	2,372.88	2.17	2,508.68	58.9
635	J-88	2,373.15	2.17	2,508.79	58.8
643	J-91	2,360.00	2.17	2,508.46	64.4
657	J-97	2,375.00	2.17	2,508.64	57.9
659	J-98	2,398.00	2.17	2,508.58	47.9
661	J-99	2,397.00	2.17	2,508.59	48.4
663	J-100	2,402.00	2.17	2,508.65	46.2
665	J-101	2,401.00	2.17	2,508.65	46.7
668	J-102	2,399.00	2.17	2,508.60	47.5
670	J-103	2,397.00	2.17	2,508.56	48.4
672	J-104	2,404.11	2.17	2,508.66	45.3
675	J-105	2,404.00	2.17	2,508.66	45.4
678	J-106	2,406.00	2.17	2,508.66	44.5
682	J-108	2,416.00	2.17	2,510.73	41.1
692	J-111	2,422.25	2.17	2,512.48	39.1
695	J-112	2,426.89	2.17	2,512.55	37.1
698	J-113	2,429.58	2.17	2,512.47	35.9
701	J-114	2,419.21	2.17	2,512.44	40.4

MDD for Existing System- Current (2013)

ID	Label	Elevation (ft)	Demand (gpm)	Hydraulic Grade (ft)	Pressure (psi)
704	J-115	2,417.00	2.17	2,512.12	41.2
707	J-116	2,416.75	2.17	2,511.69	41.2
710	J-117	2,412.81	2.17	2,510.91	42.5
713	J-118	2,415.56	2.17	2,510.92	41.3
728	J-120	2,410.66	2.17	2,510.81	43.4
731	J-121	2,408.44	2.17	2,510.54	44.3
734	J-122	2,407.53	2.17	2,510.37	44.6
740	J-126	2,405.00	2.17	2,510.19	45.6
741	J-127	2,407.90	2.17	2,509.86	44.2
744	J-128	2,401.85	2.17	2,509.85	46.8
747	J-129	2,397.49	2.17	2,509.77	48.7
750	J-130	2,401.82	2.17	2,509.76	46.8
753	J-131	2,394.29	2.17	2,509.43	49.9
756	J-132	2,401.13	2.17	2,507.80	46.2
762	J-134	2,419.40	2.17	2,507.06	38.0
765	J-135	2,422.65	2.17	2,507.06	36.6
768	J-136	2,426.24	2.17	2,507.06	35.0
771	J-137	2,415.87	2.17	2,507.98	39.9
774	J-138	2,377.05	2.17	2,508.41	56.9
777	J-139	2,403.33	2.17	2,508.32	45.5
780	J-140	2,405.01	2.17	2,508.24	44.8
783	J-141	2,383.57	2.17	2,508.63	54.2
786	J-142	2,399.70	2.17	2,508.57	47.2
789	J-143	2,390.64	2.17	2,508.60	51.1
792	J-144	2,372.70	2.17	2,508.74	59.0
795	J-145	2,373.23	2.17	2,508.79	58.8
798	J-146	2,373.51	2.17	2,508.69	58.6
801	J-147	2,400.73	2.17	2,509.24	47.0
804	J-148	2,384.37	2.17	2,508.87	54.0
810	J-150	2,392.81	2.17	2,508.55	50.2
813	J-151	2,401.24	2.17	2,508.54	46.5
816	J-152	2,393.00	2.17	2,508.55	50.1
819	J-153	2,401.82	2.17	2,508.65	46.3
822	J-154	2,409.85	2.17	2,510.24	43.5
825	J-155	2,423.00	2.17	2,511.13	38.2
828	J-156	2,427.49	2.17	2,510.53	36.0
831	J-157	2,431.93	2.17	2,510.35	34.0
834	J-158	2,434.71	2.17	2,510.29	32.8
837	J-159	2,426.85	2.17	2,510.25	36.2
840	J-160	2,409.83	2.17	2,509.73	43.3
843	J-161	2,415.23	2.17	2,509.61	40.9
846	J-162	2,396.18	2.17	2,509.23	49.0
849	J-163	2,405.59	2.17	2,509.47	45.0
852	J-164	2,413.89	2.17	2,509.77	41.6
855	J-165	2,403.20	2.17	2,509.40	46.0

MDD for Existing System- Current (2013)

ID	Label	Elevation (ft)	Demand (gpm)	Hydraulic Grade (ft)	Pressure (psi)
858	J-166	2,415.03	2.17	2,511.08	41.6
861	J-167	2,410.45	2.17	2,510.84	43.5
864	J-168	2,408.21	2.17	2,510.39	44.3
867	J-169	2,416.09	2.17	2,510.78	41.0
870	J-170	2,417.97	2.17	2,511.61	40.6
873	J-171	2,422.87	2.17	2,512.08	38.7
876	J-172	2,427.89	2.17	2,511.36	36.2
879	J-173	2,420.91	2.17	2,510.99	39.1
882	J-174	2,412.78	2.17	2,510.55	42.4
885	J-175	2,402.81	2.17	2,509.96	46.5
888	J-176	2,391.89	2.17	2,508.72	50.6
891	J-177	2,385.98	2.17	2,508.73	53.2
894	J-178	2,379.90	2.17	2,508.77	55.9
1016	J-179	2,429.95	2.17	2,511.39	35.3
1020	J-180	2,435.00	2.17	2,511.67	33.2
1028	J-181	2,425.40	2.17	2,510.60	36.9
1032	J-182	2,416.65	2.17	2,509.82	40.4
1036	J-183	2,407.87	2.17	2,509.84	44.2
1042	J-184	2,421.60	2.17	2,509.97	38.3
1053	J-185	2,421.02	2.17	2,510.69	38.9
1062	J-186	2,381.10	2.17	2,508.62	55.3
1067	J-187	2,385.76	2.17	2,508.56	53.2
1112	J-189	2,397.27	2.17	2,507.88	48.0
1116	J-190	2,398.46	2.17	2,509.69	48.2
1120	J-191	2,391.64	2.17	2,509.17	51.0
1125	J-192	2,394.63	2.17	2,509.63	49.9
1129	J-193	2,387.04	2.17	2,509.12	52.9
1133	J-194	2,385.99	2.17	2,508.50	53.1
1137	J-195	2,427.00	2.17	2,507.08	34.7
1139	J-196	2,427.00	2.17	2,507.08	34.7
1141	J-197	2,422.17	2.17	2,507.08	36.8
1150	J-199	2,427.15	2.17	2,507.71	34.9
1154	J-200	2,408.97	2.17	2,510.71	44.1
1158	J-201	2,407.84	2.17	2,510.27	44.4
1162	J-202	2,410.31	2.17	2,510.04	43.2
1166	J-203	2,420.15	2.17	2,508.24	38.2
1170	J-204	2,415.26	2.17	2,507.24	39.9
1174	J-205	2,376.45	2.17	2,508.71	57.3
1178	J-206	2,417.80	2.17	2,509.87	39.9
1182	J-207	2,416.11	2.17	2,509.87	40.6
1186	J-208	2,404.93	2.17	2,509.60	45.4
1190	J-209	2,373.12	2.17	2,508.69	58.8
1194	J-210	2,411.95	2.17	2,507.75	41.5
1198	J-211	2,426.75	2.17	2,510.30	36.2
1202	J-212	2,370.45	2.17	2,508.61	59.9

MDD for Existing System- Current (2013)

ID	Label	Elevation (ft)	Demand (gpm)	Hydraulic Grade (ft)	Pressure (psi)
1206	J-213	2,411.44	2.17	2,509.62	42.6
1210	J-214	2,415.13	2.17	2,512.50	42.2
1215	J-215	2,367.85	2.17	2,507.97	60.7
1219	J-216	2,428.26	2.17	2,512.56	36.5
1223	J-217	2,431.87	2.17	2,512.56	35.0
1227	J-218	2,421.47	2.17	2,510.19	38.5
1231	J-219	2,420.19	2.17	2,510.18	39.0
1235	J-220	2,416.49	2.17	2,510.17	40.6
1239	J-221	2,409.59	2.17	2,508.54	42.9
1243	J-222	2,402.23	2.17	2,508.54	46.1
1247	J-223	2,409.71	2.17	2,507.76	42.5
1286	J-226	2,412.43	2.17	2,510.17	42.4
1290	J-227	2,417.18	2.17	2,512.37	41.3
1305	J-229	2,403.92	2.17	2,508.24	45.2
1308	J-230	2,382.54	2.17	2,508.63	54.7
1314	J-231	2,394.24	2.17	2,509.43	49.9
1322	J-232	2,405.67	2.17	2,509.82	45.2
1329	J-233	2,424.14	2.17	2,510.84	37.6
1333	J-234	2,409.88	2.17	2,509.72	43.3
1337	J-235	2,387.45	2.17	2,508.72	52.6
1395	J-242	2,405.66	2.17	2,507.77	44.3
1399	J-243	2,426.83	2.17	2,507.08	34.8
1404	J-244	2,426.85	2.17	2,507.09	34.8
1411	J-245	2,427.00	2.17	2,507.05	34.7
1414	J-246	2,422.19	2.17	2,507.15	36.8
1417	J-247	2,427.00	2.17	2,507.15	34.7
1421	J-248	2,397.91	2.17	2,508.60	48.0
1426	J-249	2,379.12	2.17	2,508.53	56.1
1430	J-250	2,386.50	2.17	2,508.67	53.0
1433	J-251	2,387.74	2.17	2,508.70	52.4
1437	J-252	2,417.00	2.17	2,509.74	40.2
1438	J-253	2,416.45	2.17	2,509.74	40.4
1442	J-254	2,389.00	2.17	2,509.40	52.2
1447	J-257	2,402.45	2.17	2,509.78	46.5
1450	J-258	2,396.00	2.17	2,509.71	49.3
1452	J-259	2,403.00	2.17	2,509.71	46.3
1454	J-260	2,425.78	2.17	2,510.41	36.7
1457	J-261	2,429.70	2.17	2,512.39	35.8
1460	J-262	2,422.00	2.17	2,513.79	39.8
1468	J-264	2,417.00	2.17	2,512.46	41.4

Scenario: Existing

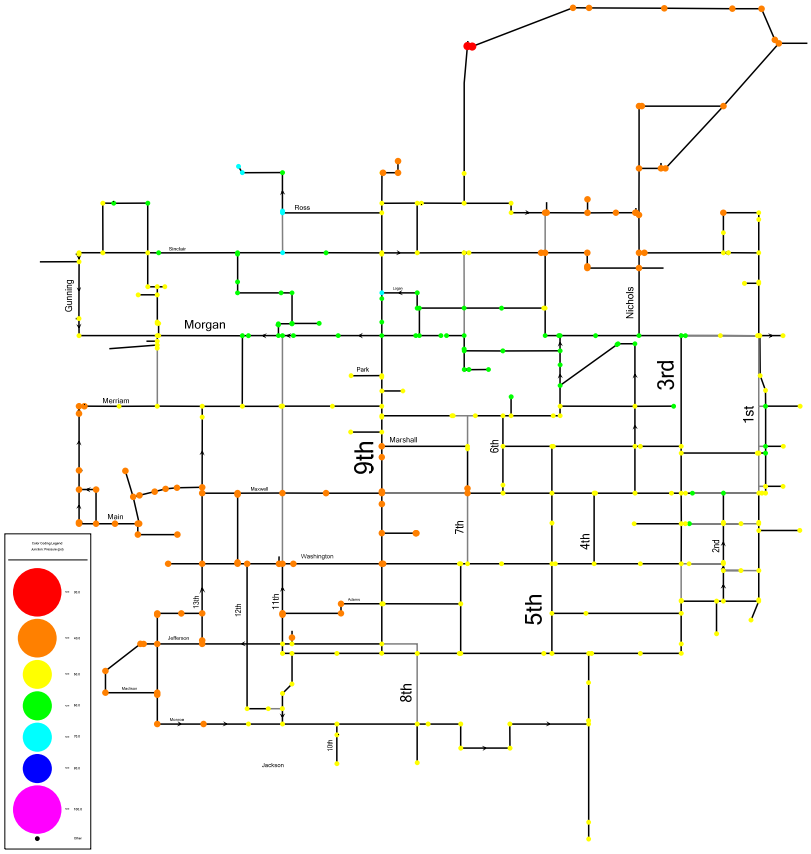

MDD for Existing System- 6-YEAR (2019)

ID	Label	Elevation (ft)	Demand (gpm)	Hydraulic Grade (ft)	Pressure (psi)
56	161	2,427.00	2.27	2,507.05	34.7
57	159	2,417.00	2.27	2,510.30	40.4
58	158	2,418.00	2.27	2,510.34	40.0
59	157	2,429.88	2.27	2,511.23	35.3
61	112	2,427.06	2.27	2,512.35	37.0
62	110	2,417.00	2.27	2,511.91	41.1
63	109	2,416.00	2.27	2,510.58	41.0
64	106	2,416.00	2.27	2,510.72	41.1
65	155	2,409.00	2.27	2,510.25	43.9
66	154	2,406.00	2.27	2,510.08	45.1
67	153	2,421.00	2.27	2,510.50	38.8
68	152	2,422.00	2.27	2,510.50	38.4
69	151	2,417.00	2.27	2,509.66	40.2
70	150	2,418.00	2.27	2,509.69	39.8
71	149	2,416.00	2.27	2,509.69	40.6
72	148	2,400.00	2.27	2,509.06	47.3
73	147	2,396.00	2.27	2,509.06	49.0
74	146	2,391.00	2.27	2,509.05	51.2
77	143	2,401.00	2.27	2,507.73	46.3
78	142	2,428.32	2.27	2,507.65	34.4
79	141	2,370.91	2.27	2,508.51	59.7
80	140	2,371.01	2.27	2,508.65	59.7
81	139	2,403.01	2.27	2,508.40	45.7
82	138	2,394.50	2.27	2,508.40	49.4
83	137	2,388.32	2.27	2,508.40	52.1
84	136	2,394.74	2.27	2,508.40	49.3
85	135	2,388.00	2.27	2,508.57	52.3
86	134	2,387.71	2.27	2,508.55	52.4
87	133	2,386.48	2.27	2,508.52	52.9
88	132	2,379.27	2.27	2,508.48	56.0
89	131	2,388.39	2.27	2,508.43	52.0
90	130	2,378.79	2.27	2,508.39	56.2
91	129	2,369.89	2.27	2,508.45	60.1
92	128	2,374.49	2.27	2,508.51	58.1
93	127	2,372.49	2.27	2,508.54	59.0
94	126	2,400.00	2.27	2,508.44	47.0
97	121	2,427.00	2.27	2,507.08	34.7
98	119	2,414.23	2.27	2,507.39	40.4
99	114	2,394.19	2.27	2,508.14	49.4
100	105	2,412.32	2.27	2,507.71	41.4
101	115	2,396.83	2.27	2,507.79	48.1
103	120	2,414.64	2.27	2,512.44	42.4
106	108	2,396.89	2.27	2,508.41	48.3
107	107	2,372.41	2.27	2,508.55	59.0
108	104	2,396.00	2.27	2,509.46	49.2

MDD for Existing System- 6-YEAR (2019)

ID	Label	Elevation (ft)	Demand (gpm)	Hydraulic Grade (ft)	Pressure (psi)
109	103	2,394.29	2.27	2,509.58	50.0
110	102	2,420.77	2.27	2,509.98	38.7
111	101	2,425.37	2.27	2,512.31	37.7
112	100	2,417.00	2.27	2,512.21	41.3
113	99	2,417.00	2.27	2,511.91	41.1
114	98	2,417.00	2.27	2,511.53	41.0
115	97	2,417.00	2.27	2,511.53	41.0
116	96	2,413.00	2.27	2,510.72	42.4
117	95	2,428.08	2.27	2,512.39	36.5
118	94	2,415.43	2.27	2,512.66	42.2
119	93	2,417.00	2.27	2,512.16	41.3
120	92	2,415.00	2.27	2,510.86	41.6
121	91	2,410.00	2.27	2,510.56	43.6
122	90	2,409.00	2.27	2,510.54	44.0
123	89	2,408.00	2.27	2,510.20	44.3
124	88	2,408.00	2.27	2,509.67	44.1
125	87	2,406.00	2.27	2,509.72	45.0
126	86	2,405.00	2.27	2,510.00	45.5
127	85	2,416.00	2.27	2,510.86	41.1
128	84	2,418.00	2.27	2,511.44	40.5
129	83	2,423.14	2.27	2,511.83	38.4
130	82	2,429.70	2.27	2,512.12	35.7
131	81	2,429.70	2.27	2,512.26	35.8
132	80	2,427.43	2.27	2,511.47	36.4
133	79	2,430.08	2.27	2,511.23	35.2
135	77	2,428.74	2.27	2,511.21	35.8
136	76	2,421.00	2.27	2,510.81	38.9
137	75	2,408.00	2.27	2,510.10	44.3
138	74	2,406.00	2.27	2,509.92	45.1
139	73	2,400.00	2.27	2,509.66	47.5
140	72	2,397.64	2.27	2,509.58	48.5
142	70	2,398.00	2.27	2,509.54	48.4
144	68	2,428.67	2.27	2,510.07	35.3
145	67	2,427.18	2.27	2,510.08	35.9
146	66	2,434.30	2.27	2,510.10	32.9
147	65	2,434.96	2.27	2,510.09	32.6
148	64	2,428.91	2.27	2,510.20	35.2
149	63	2,424.34	2.27	2,510.30	37.3
150	62	2,427.70	2.27	2,510.30	35.8
152	60	2,425.43	2.27	2,510.71	37.0
153	59	2,422.86	2.27	2,510.89	38.2
154	58	2,427.00	2.27	2,510.14	36.0
155	57	2,412.00	2.27	2,509.69	42.3
156	56	2,408.00	2.27	2,509.67	44.1
157	55	2,404.00	2.27	2,509.46	45.7

MDD for Existing System- 6-YEAR (2019)

ID	Label	Elevation (ft)	Demand (gpm)	Hydraulic Grade (ft)	Pressure (psi)
158	54	2,395.00	2.27	2,509.46	49.6
160	52	2,394.18	2.27	2,509.54	50.0
161	51	2,398.00	2.27	2,509.53	48.3
162	50	2,420.00	2.27	2,509.70	38.9
163	49	2,415.00	2.27	2,509.56	41.0
164	48	2,414.00	2.27	2,509.60	41.4
165	47	2,407.00	2.27	2,509.30	44.4
166	46	2,395.00	2.27	2,509.31	49.6
168	44	2,394.00	2.27	2,509.26	50.0
169	43	2,396.00	2.27	2,508.52	48.8
170	42	2,392.00	2.27	2,508.52	50.5
171	41	2,407.61	2.27	2,509.97	44.4
172	40	2,408.61	2.27	2,509.64	43.8
173	39	2,413.00	2.27	2,509.36	41.8
174	38	2,404.74	2.27	2,509.43	45.4
175	37	2,398.00	2.27	2,509.27	48.2
176	36	2,403.68	2.27	2,509.27	45.8
177	35	2,400.33	2.27	2,509.05	47.1
178	34	2,403.22	2.27	2,509.05	45.9
179	33	2,389.97	2.27	2,508.98	51.6
180	32	2,388.75	2.27	2,508.91	52.1
181	31	2,381.40	2.27	2,508.60	55.1
182	30	2,373.78	2.27	2,508.55	58.4
183	29	2,373.10	2.27	2,508.55	58.7
184	28	2,397.29	2.27	2,507.78	47.9
186	26	2,391.00	2.27	2,509.04	51.2
187	25	2,389.00	2.27	2,508.24	51.7
188	24	2,383.53	2.27	2,508.50	54.2
189	23	2,383.89	2.27	2,508.48	54.0
190	22	2,373.26	2.27	2,508.55	58.7
191	21	2,374.00	2.27	2,508.68	58.4
192	20	2,392.67	2.27	2,508.57	50.2
193	19	2,405.78	2.27	2,508.51	44.5
194	18	2,403.98	2.27	2,508.51	45.3
195	17	2,411.80	2.27	2,508.40	41.9
196	16	2,401.06	2.27	2,508.40	46.5
197	15	2,404.00	2.27	2,507.70	45.0
198	14	2,426.00	2.27	2,507.81	35.5
199	13	2,429.50	2.27	2,507.90	34.0
200	12	2,428.00	2.27	2,507.93	34.7
201	11	2,421.00	2.27	2,508.14	37.8
203	9	2,426.00	2.27	2,507.08	35.1
204	8	2,363.33	2.27	2,507.85	62.7
205	7	2,371.87	2.27	2,507.86	59.0
207	5	2,408.14	2.27	2,507.42	43.0

MDD for Existing System- 6-YEAR (2019)

ID	Label	Elevation (ft)	Demand (gpm)	Hydraulic Grade (ft)	Pressure (psi)
208	4	2,404.51	2.27	2,508.20	45.0
209	3	2,409.16	2.27	2,507.96	42.8
210	2	2,418.65	2.27	2,507.90	38.7
211	1	2,415.67	2.27	2,507.90	40.0
423	J-2	2,433.00	2.27	2,512.35	34.4
425	J-3	2,434.00	2.27	2,512.35	34.0
427	J-4	2,433.00	2.27	2,512.35	34.4
431	J-6	2,427.00	2.27	2,512.34	37.0
436	J-8	2,475.00	2.27	2,507.06	13.9
438	J-9	2,476.00	2.27	2,507.06	13.5
440	J-10	2,427.00	2.27	2,507.06	34.7
442	J-11	2,418.00	2.27	2,507.06	38.6
444	J-12	2,417.00	2.27	2,507.06	39.0
446	J-13	2,417.00	2.27	2,507.06	39.0
457	J-19	2,363.00	2.27	2,507.85	62.8
459	J-20	2,421.00	2.27	2,507.90	37.7
461	J-21	2,410.72	2.27	2,507.90	42.1
464	J-22	2,365.00	2.27	2,507.87	61.9
466	J-23	2,406.00	2.27	2,507.31	43.9
468	J-24	2,405.00	2.27	2,507.29	44.3
470	J-25	2,415.00	2.27	2,507.22	40.0
472	J-26	2,427.00	2.27	2,507.09	34.7
483	J-29	2,406.00	2.27	2,507.70	44.1
485	J-30	2,418.00	2.27	2,507.70	38.9
487	J-31	2,414.00	2.27	2,507.70	40.6
489	J-32	2,410.00	2.27	2,507.69	42.4
493	J-33	2,401.00	2.27	2,507.71	46.3
496	J-35	2,429.95	2.27	2,507.91	33.8
500	J-36	2,397.00	2.27	2,509.33	48.7
504	J-37	2,397.00	2.27	2,507.79	48.0
505	J-38	2,396.00	2.27	2,508.17	48.6
506	J-39	2,396.00	2.27	2,508.33	48.7
511	J-40	2,393.00	2.27	2,509.08	50.3
514	J-41	2,396.00	2.27	2,509.05	49.0
516	J-42	2,399.00	2.27	2,509.47	47.9
519	J-43	2,394.00	2.27	2,509.47	50.1
521	J-44	2,399.00	2.27	2,509.56	47.9
523	J-45	2,402.00	2.27	2,509.57	46.6
526	J-46	2,405.00	2.27	2,509.54	45.3
528	J-47	2,398.00	2.27	2,509.43	48.3
531	J-48	2,400.00	2.27	2,509.40	47.4
533	J-49	2,402.00	2.27	2,509.67	46.7
536	J-50	2,400.00	2.27	2,509.63	47.5
538	J-51	2,403.00	2.27	2,509.68	46.2
541	J-52	2,405.00	2.27	2,509.66	45.4

MDD for Existing System- 6-YEAR (2019)

ID	Label	Elevation (ft)	Demand (gpm)	Hydraulic Grade (ft)	Pressure (psi)
543	J-53	2,409.00	2.27	2,509.64	43.6
545	J-54	2,405.00	2.27	2,509.76	45.4
548	J-55	2,406.00	2.27	2,509.73	45.0
550	J-56	2,414.00	2.27	2,510.98	42.0
552	J-57	2,415.00	2.27	2,511.07	41.6
554	J-58	2,416.00	2.27	2,511.25	41.3
556	J-59	2,416.00	2.27	2,511.34	41.3
560	J-60	2,424.26	2.27	2,510.52	37.4
563	J-61	2,427.00	2.27	2,510.44	36.2
565	J-62	2,427.00	2.27	2,510.40	36.2
567	J-63	2,427.00	2.27	2,510.37	36.1
570	J-64	2,429.09	2.27	2,510.20	35.2
573	J-65	2,433.00	2.27	2,510.20	33.5
575	J-66	2,431.00	2.27	2,510.15	34.3
577	J-67	2,428.85	2.27	2,511.21	35.7
580	J-68	2,417.24	2.27	2,512.88	41.5
586	J-70	2,420.00	2.27	2,513.06	40.3
593	J-73	2,416.00	2.27	2,511.57	41.4
602	J-76	2,417.00	2.27	2,512.34	41.3
604	J-77	2,417.00	2.27	2,512.30	41.3
612	J-80	2,421.00	2.27	2,511.61	39.3
614	J-81	2,421.00	2.27	2,511.57	39.3
617	J-82	2,401.00	2.27	2,509.02	46.8
621	J-83	2,387.00	2.27	2,508.97	52.9
624	J-84	2,415.00	2.27	2,509.44	40.9
627	J-85	2,398.00	2.27	2,509.21	48.2
630	J-86	2,401.00	2.27	2,509.08	46.9
632	J-87	2,372.88	2.27	2,508.55	58.8
635	J-88	2,373.15	2.27	2,508.65	58.7
643	J-91	2,360.00	2.27	2,508.33	64.3
657	J-97	2,375.00	2.27	2,508.49	57.9
659	J-98	2,398.00	2.27	2,508.44	47.9
661	J-99	2,397.00	2.27	2,508.45	48.3
663	J-100	2,402.00	2.27	2,508.50	46.2
665	J-101	2,401.00	2.27	2,508.50	46.6
668	J-102	2,399.00	2.27	2,508.46	47.5
670	J-103	2,397.00	2.27	2,508.41	48.3
672	J-104	2,404.11	2.27	2,508.51	45.3
675	J-105	2,404.00	2.27	2,508.51	45.3
678	J-106	2,406.00	2.27	2,508.51	44.4
682	J-108	2,416.00	2.27	2,510.55	41.0
692	J-111	2,422.25	2.27	2,512.27	39.0
695	J-112	2,426.89	2.27	2,512.34	37.0
698	J-113	2,429.58	2.27	2,512.26	35.8
701	J-114	2,419.21	2.27	2,512.23	40.3

MDD for Existing System- 6-YEAR (2019)

ID	Label	Elevation (ft)	Demand (gpm)	Hydraulic Grade (ft)	Pressure (psi)
704	J-115	2,417.00	2.27	2,511.91	41.1
707	J-116	2,416.75	2.27	2,511.48	41.1
710	J-117	2,412.81	2.27	2,510.71	42.4
713	J-118	2,415.56	2.27	2,510.72	41.3
728	J-120	2,410.66	2.27	2,510.61	43.3
731	J-121	2,408.44	2.27	2,510.34	44.2
734	J-122	2,407.53	2.27	2,510.17	44.5
740	J-126	2,405.00	2.27	2,510.00	45.5
741	J-127	2,407.90	2.27	2,509.67	44.1
744	J-128	2,401.85	2.27	2,509.66	46.7
747	J-129	2,397.49	2.27	2,509.58	48.6
750	J-130	2,401.82	2.27	2,509.57	46.7
753	J-131	2,394.29	2.27	2,509.27	49.8
756	J-132	2,401.13	2.27	2,507.73	46.2
762	J-134	2,419.40	2.27	2,507.06	38.0
765	J-135	2,422.65	2.27	2,507.06	36.6
768	J-136	2,426.24	2.27	2,507.06	35.0
771	J-137	2,415.87	2.27	2,507.90	39.9
774	J-138	2,377.05	2.27	2,508.28	56.9
777	J-139	2,403.33	2.27	2,508.21	45.5
780	J-140	2,405.01	2.27	2,508.14	44.7
783	J-141	2,383.57	2.27	2,508.50	54.2
786	J-142	2,399.70	2.27	2,508.44	47.1
789	J-143	2,390.64	2.27	2,508.47	51.1
792	J-144	2,372.70	2.27	2,508.61	58.9
795	J-145	2,373.23	2.27	2,508.65	58.7
798	J-146	2,373.51	2.27	2,508.55	58.5
801	J-147	2,400.73	2.27	2,509.08	47.0
804	J-148	2,384.37	2.27	2,508.72	53.9
810	J-150	2,392.81	2.27	2,508.40	50.1
813	J-151	2,401.24	2.27	2,508.40	46.5
816	J-152	2,393.00	2.27	2,508.40	50.0
819	J-153	2,401.82	2.27	2,508.50	46.2
822	J-154	2,409.85	2.27	2,510.04	43.4
825	J-155	2,423.00	2.27	2,510.93	38.1
828	J-156	2,427.49	2.27	2,510.32	35.9
831	J-157	2,431.93	2.27	2,510.14	33.9
834	J-158	2,434.71	2.27	2,510.09	32.7
837	J-159	2,426.85	2.27	2,510.05	36.1
840	J-160	2,409.83	2.27	2,509.55	43.2
843	J-161	2,415.23	2.27	2,509.45	40.8
846	J-162	2,396.18	2.27	2,509.07	48.9
849	J-163	2,405.59	2.27	2,509.30	45.0
852	J-164	2,413.89	2.27	2,509.59	41.5
855	J-165	2,403.20	2.27	2,509.23	46.0

MDD for Existing System- 6-YEAR (2019)

ID	Label	Elevation (ft)	Demand (gpm)	Hydraulic Grade (ft)	Pressure (psi)
858	J-166	2,415.03	2.27	2,510.88	41.6
861	J-167	2,410.45	2.27	2,510.64	43.4
864	J-168	2,408.21	2.27	2,510.20	44.2
867	J-169	2,416.09	2.27	2,510.59	41.0
870	J-170	2,417.97	2.27	2,511.42	40.5
873	J-171	2,422.87	2.27	2,511.88	38.6
876	J-172	2,427.89	2.27	2,511.17	36.1
879	J-173	2,420.91	2.27	2,510.80	39.0
882	J-174	2,412.78	2.27	2,510.37	42.3
885	J-175	2,402.81	2.27	2,509.78	46.4
888	J-176	2,391.89	2.27	2,508.57	50.6
891	J-177	2,385.98	2.27	2,508.59	53.2
894	J-178	2,379.90	2.27	2,508.63	55.8
1016	J-179	2,429.95	2.27	2,511.19	35.2
1020	J-180	2,435.00	2.27	2,511.47	33.2
1028	J-181	2,425.40	2.27	2,510.42	36.9
1032	J-182	2,416.65	2.27	2,509.64	40.3
1036	J-183	2,407.87	2.27	2,509.66	44.1
1042	J-184	2,421.60	2.27	2,509.80	38.2
1053	J-185	2,421.02	2.27	2,510.50	38.8
1062	J-186	2,381.10	2.27	2,508.47	55.2
1067	J-187	2,385.76	2.27	2,508.42	53.2
1112	J-189	2,397.27	2.27	2,507.80	47.9
1116	J-190	2,398.46	2.27	2,509.50	48.1
1120	J-191	2,391.64	2.27	2,509.03	50.9
1125	J-192	2,394.63	2.27	2,509.46	49.8
1129	J-193	2,387.04	2.27	2,508.96	52.9
1133	J-194	2,385.99	2.27	2,508.38	53.1
1137	J-195	2,427.00	2.27	2,507.08	34.7
1139	J-196	2,427.00	2.27	2,507.08	34.7
1141	J-197	2,422.17	2.27	2,507.08	36.8
1150	J-199	2,427.15	2.27	2,507.65	34.9
1154	J-200	2,408.97	2.27	2,510.51	44.0
1158	J-201	2,407.84	2.27	2,510.09	44.3
1162	J-202	2,410.31	2.27	2,509.86	43.2
1166	J-203	2,420.15	2.27	2,508.14	38.1
1170	J-204	2,415.26	2.27	2,507.22	39.9
1174	J-205	2,376.45	2.27	2,508.57	57.3
1178	J-206	2,417.80	2.27	2,509.69	39.8
1182	J-207	2,416.11	2.27	2,509.69	40.6
1186	J-208	2,404.93	2.27	2,509.43	45.3
1190	J-209	2,373.12	2.27	2,508.55	58.7
1194	J-210	2,411.95	2.27	2,507.68	41.5
1198	J-211	2,426.75	2.27	2,510.12	36.1
1202	J-212	2,370.45	2.27	2,508.48	59.8

MDD for Existing System- 6-YEAR (2019)

ID	Label	Elevation (ft)	Demand (gpm)	Hydraulic Grade (ft)	Pressure (psi)
1206	J-213	2,411.44	2.27	2,509.45	42.5
1210	J-214	2,415.13	2.27	2,512.30	42.1
1215	J-215	2,367.85	2.27	2,507.87	60.7
1219	J-216	2,428.26	2.27	2,512.35	36.5
1223	J-217	2,431.87	2.27	2,512.35	34.9
1227	J-218	2,421.47	2.27	2,509.99	38.4
1231	J-219	2,420.19	2.27	2,509.98	38.9
1235	J-220	2,416.49	2.27	2,509.98	40.5
1239	J-221	2,409.59	2.27	2,508.40	42.8
1243	J-222	2,402.23	2.27	2,508.40	46.0
1247	J-223	2,409.71	2.27	2,507.69	42.5
1286	J-226	2,412.43	2.27	2,509.97	42.3
1290	J-227	2,417.18	2.27	2,512.17	41.2
1305	J-229	2,403.92	2.27	2,508.14	45.2
1308	J-230	2,382.54	2.27	2,508.50	54.6
1314	J-231	2,394.24	2.27	2,509.26	49.9
1322	J-232	2,405.67	2.27	2,509.63	45.1
1329	J-233	2,424.14	2.27	2,510.64	37.5
1333	J-234	2,409.88	2.27	2,509.55	43.2
1337	J-235	2,387.45	2.27	2,508.58	52.5
1395	J-242	2,405.66	2.27	2,507.70	44.2
1399	J-243	2,426.83	2.27	2,507.08	34.8
1404	J-244	2,426.85	2.27	2,507.09	34.8
1411	J-245	2,427.00	2.27	2,507.05	34.7
1414	J-246	2,422.19	2.27	2,507.14	36.8
1417	J-247	2,427.00	2.27	2,507.14	34.7
1421	J-248	2,397.91	2.27	2,508.46	47.9
1426	J-249	2,379.12	2.27	2,508.39	56.0
1430	J-250	2,386.50	2.27	2,508.53	52.9
1433	J-251	2,387.74	2.27	2,508.55	52.4
1437	J-252	2,417.00	2.27	2,509.57	40.1
1438	J-253	2,416.45	2.27	2,509.57	40.4
1442	J-254	2,389.00	2.27	2,509.23	52.1
1447	J-257	2,402.45	2.27	2,509.59	46.4
1450	J-258	2,396.00	2.27	2,509.54	49.2
1452	J-259	2,403.00	2.27	2,509.54	46.2
1454	J-260	2,425.78	2.27	2,510.22	36.6
1457	J-261	2,429.70	2.27	2,512.19	35.8
1460	J-262	2,422.00	2.27	2,513.59	39.7
1468	J-264	2,417.00	2.27	2,512.25	41.3

Scenario: MDD

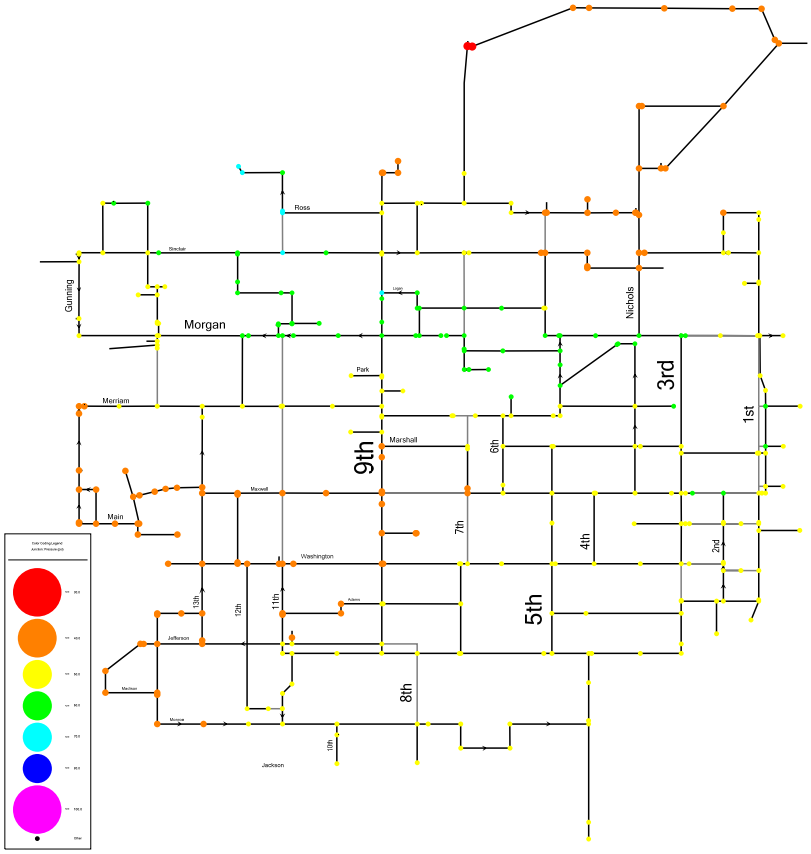

MDD for Existing System- 20-YEAR (2033)

ID	Label	Elevation (ft)	Demand (gpm)	Hydraulic Grade (ft)	Pressure (psi)
56	161	2,427.00	2.54	2,507.05	34.7
57	159	2,417.00	2.54	2,509.59	40.1
58	158	2,418.00	2.54	2,509.64	39.7
59	157	2,429.88	2.54	2,510.73	35.0
61	112	2,427.06	2.54	2,511.84	36.8
62	110	2,417.00	2.54	2,511.38	40.9
63	109	2,416.00	2.54	2,510.11	40.8
64	106	2,416.00	2.54	2,510.21	40.8
65	155	2,409.00	2.54	2,509.77	43.7
66	154	2,406.00	2.54	2,509.60	44.9
67	153	2,421.00	2.54	2,510.04	38.6
68	152	2,422.00	2.54	2,510.04	38.2
69	151	2,417.00	2.54	2,509.23	40.0
70	150	2,418.00	2.54	2,509.26	39.6
71	149	2,416.00	2.54	2,509.27	40.4
72	148	2,400.00	2.54	2,508.68	47.1
73	147	2,396.00	2.54	2,508.68	48.8
74	146	2,391.00	2.54	2,508.66	51.0
77	143	2,401.00	2.54	2,507.56	46.2
78	142	2,428.32	2.54	2,507.50	34.3
79	141	2,370.91	2.54	2,508.15	59.5
80	140	2,371.01	2.54	2,508.31	59.5
81	139	2,403.01	2.54	2,508.06	45.5
82	138	2,394.50	2.54	2,508.06	49.2
83	137	2,388.32	2.54	2,508.06	51.9
84	136	2,394.74	2.54	2,508.06	49.1
85	135	2,388.00	2.54	2,508.22	52.1
86	134	2,387.71	2.54	2,508.20	52.2
87	133	2,386.48	2.54	2,508.18	52.8
88	132	2,379.27	2.54	2,508.14	55.9
89	131	2,388.39	2.54	2,508.09	51.9
90	130	2,378.79	2.54	2,508.06	56.0
91	129	2,369.89	2.54	2,508.15	59.9
92	128	2,374.49	2.54	2,508.19	58.0
93	127	2,372.49	2.54	2,508.22	58.8
94	126	2,400.00	2.54	2,508.13	46.9
97	121	2,427.00	2.54	2,507.07	34.7
98	119	2,414.23	2.54	2,507.30	40.3
99	114	2,394.19	2.54	2,507.88	49.3
100	105	2,412.32	2.54	2,507.55	41.3
101	115	2,396.83	2.54	2,507.61	48.0
103	120	2,414.64	2.54	2,511.93	42.2
106	108	2,396.89	2.54	2,508.13	48.2
107	107	2,372.41	2.54	2,508.20	58.9
108	104	2,396.00	2.54	2,509.04	49.0

MDD for Existing System- 20-YEAR (2033)

ID	Label	Elevation (ft)	Demand (gpm)	Hydraulic Grade (ft)	Pressure (psi)
109	103	2,394.29	2.54	2,509.12	49.8
110	102	2,420.77	2.54	2,509.50	38.5
111	101	2,425.37	2.54	2,511.79	37.5
112	100	2,417.00	2.54	2,511.69	41.0
113	99	2,417.00	2.54	2,511.38	40.9
114	98	2,417.00	2.54	2,511.00	40.7
115	97	2,417.00	2.54	2,511.00	40.7
116	96	2,413.00	2.54	2,510.21	42.1
117	95	2,428.08	2.54	2,511.87	36.3
118	94	2,415.43	2.54	2,512.15	41.9
119	93	2,417.00	2.54	2,511.67	41.0
120	92	2,415.00	2.54	2,510.38	41.3
121	91	2,410.00	2.54	2,510.07	43.4
122	90	2,409.00	2.54	2,510.04	43.8
123	89	2,408.00	2.54	2,509.72	44.1
124	88	2,408.00	2.54	2,509.19	43.9
125	87	2,406.00	2.54	2,509.25	44.8
126	86	2,405.00	2.54	2,509.51	45.3
127	85	2,416.00	2.54	2,510.38	40.9
128	84	2,418.00	2.54	2,510.95	40.3
129	83	2,423.14	2.54	2,511.33	38.2
130	82	2,429.70	2.54	2,511.61	35.5
131	81	2,429.70	2.54	2,511.74	35.6
132	80	2,427.43	2.54	2,510.97	36.2
133	79	2,430.08	2.54	2,510.73	35.0
135	77	2,428.74	2.54	2,510.72	35.5
136	76	2,421.00	2.54	2,510.33	38.7
137	75	2,408.00	2.54	2,509.65	44.1
138	74	2,406.00	2.54	2,509.48	44.9
139	73	2,400.00	2.54	2,509.23	47.4
140	72	2,397.64	2.54	2,509.12	48.3
142	70	2,398.00	2.54	2,509.12	48.2
144	68	2,428.67	2.54	2,509.57	35.1
145	67	2,427.18	2.54	2,509.58	35.7
146	66	2,434.30	2.54	2,509.59	32.6
147	65	2,434.96	2.54	2,509.58	32.4
148	64	2,428.91	2.54	2,509.70	35.0
149	63	2,424.34	2.54	2,509.80	37.0
150	62	2,427.70	2.54	2,509.80	35.6
152	60	2,425.43	2.54	2,510.22	36.8
153	59	2,422.86	2.54	2,510.40	37.9
154	58	2,427.00	2.54	2,509.69	35.8
155	57	2,412.00	2.54	2,509.25	42.2
156	56	2,408.00	2.54	2,509.24	43.9
157	55	2,404.00	2.54	2,509.04	45.5

MDD for Existing System- 20-YEAR (2033)

ID	Label	Elevation (ft)	Demand (gpm)	Hydraulic Grade (ft)	Pressure (psi)
158	54	2,395.00	2.54	2,509.04	49.4
160	52	2,394.18	2.54	2,509.09	49.8
161	51	2,398.00	2.54	2,509.07	48.2
162	50	2,420.00	2.54	2,509.27	38.7
163	49	2,415.00	2.54	2,509.14	40.8
164	48	2,414.00	2.54	2,509.17	41.3
165	47	2,407.00	2.54	2,508.90	44.2
166	46	2,395.00	2.54	2,508.90	49.4
168	44	2,394.00	2.54	2,508.85	49.8
169	43	2,396.00	2.54	2,508.19	48.6
170	42	2,392.00	2.54	2,508.19	50.4
171	41	2,407.61	2.54	2,509.49	44.2
172	40	2,408.61	2.54	2,509.19	43.6
173	39	2,413.00	2.54	2,508.96	41.6
174	38	2,404.74	2.54	2,509.02	45.2
175	37	2,398.00	2.54	2,508.86	48.1
176	36	2,403.68	2.54	2,508.86	45.6
177	35	2,400.33	2.54	2,508.66	47.0
178	34	2,403.22	2.54	2,508.66	45.7
179	33	2,389.97	2.54	2,508.60	51.4
180	32	2,388.75	2.54	2,508.53	51.9
181	31	2,381.40	2.54	2,508.26	55.0
182	30	2,373.78	2.54	2,508.20	58.3
183	29	2,373.10	2.54	2,508.20	58.6
184	28	2,397.29	2.54	2,507.60	47.8
186	26	2,391.00	2.54	2,508.68	51.0
187	25	2,389.00	2.54	2,507.99	51.6
188	24	2,383.53	2.54	2,508.18	54.0
189	23	2,383.89	2.54	2,508.16	53.9
190	22	2,373.26	2.54	2,508.20	58.5
191	21	2,374.00	2.54	2,508.34	58.2
192	20	2,392.67	2.54	2,508.22	50.1
193	19	2,405.78	2.54	2,508.15	44.4
194	18	2,403.98	2.54	2,508.15	45.2
195	17	2,411.80	2.54	2,508.05	41.7
196	16	2,401.06	2.54	2,508.05	46.4
197	15	2,404.00	2.54	2,507.54	44.9
198	14	2,426.00	2.54	2,507.63	35.4
199	13	2,429.50	2.54	2,507.70	33.9
200	12	2,428.00	2.54	2,507.72	34.6
201	11	2,421.00	2.54	2,507.88	37.7
203	9	2,426.00	2.54	2,507.07	35.1
204	8	2,363.33	2.54	2,507.61	62.5
205	7	2,371.87	2.54	2,507.62	58.8
207	5	2,408.14	2.54	2,507.33	43.0

MDD for Existing System- 20-YEAR (2033)

ID	Label	Elevation (ft)	Demand (gpm)	Hydraulic Grade (ft)	Pressure (psi)
208	4	2,404.51	2.54	2,507.94	44.8
209	3	2,409.16	2.54	2,507.74	42.7
210	2	2,418.65	2.54	2,507.69	38.6
211	1	2,415.67	2.54	2,507.69	39.9
423	J-2	2,433.00	2.54	2,511.84	34.2
425	J-3	2,434.00	2.54	2,511.83	33.7
427	J-4	2,433.00	2.54	2,511.83	34.2
431	J-6	2,427.00	2.54	2,511.83	36.8
436	J-8	2,475.00	2.54	2,507.06	13.9
438	J-9	2,476.00	2.54	2,507.06	13.5
440	J-10	2,427.00	2.54	2,507.05	34.7
442	J-11	2,418.00	2.54	2,507.05	38.6
444	J-12	2,417.00	2.54	2,507.05	39.0
446	J-13	2,417.00	2.54	2,507.05	39.0
457	J-19	2,363.00	2.54	2,507.61	62.7
459	J-20	2,421.00	2.54	2,507.69	37.6
461	J-21	2,410.72	2.54	2,507.70	42.0
464	J-22	2,365.00	2.54	2,507.63	61.8
466	J-23	2,406.00	2.54	2,507.25	43.9
468	J-24	2,405.00	2.54	2,507.23	44.3
470	J-25	2,415.00	2.54	2,507.18	40.0
472	J-26	2,427.00	2.54	2,507.08	34.7
483	J-29	2,406.00	2.54	2,507.54	44.0
485	J-30	2,418.00	2.54	2,507.54	38.8
487	J-31	2,414.00	2.54	2,507.53	40.5
489	J-32	2,410.00	2.54	2,507.53	42.3
493	J-33	2,401.00	2.54	2,507.54	46.2
496	J-35	2,429.95	2.54	2,507.70	33.7
500	J-36	2,397.00	2.54	2,508.92	48.5
504	J-37	2,397.00	2.54	2,507.61	48.0
505	J-38	2,396.00	2.54	2,507.91	48.5
506	J-39	2,396.00	2.54	2,508.04	48.6
511	J-40	2,393.00	2.54	2,508.68	50.2
514	J-41	2,396.00	2.54	2,508.65	48.8
516	J-42	2,399.00	2.54	2,509.02	47.7
519	J-43	2,394.00	2.54	2,509.05	49.9
521	J-44	2,399.00	2.54	2,509.09	47.7
523	J-45	2,402.00	2.54	2,509.11	46.4
526	J-46	2,405.00	2.54	2,509.06	45.1
528	J-47	2,398.00	2.54	2,508.98	48.1
531	J-48	2,400.00	2.54	2,508.95	47.2
533	J-49	2,402.00	2.54	2,509.19	46.5
536	J-50	2,400.00	2.54	2,509.14	47.3
538	J-51	2,403.00	2.54	2,509.20	46.0
541	J-52	2,405.00	2.54	2,509.18	45.2

MDD for Existing System- 20-YEAR (2033)

ID	Label	Elevation (ft)	Demand (gpm)	Hydraulic Grade (ft)	Pressure (psi)
543	J-53	2,409.00	2.54	2,509.16	43.4
545	J-54	2,405.00	2.54	2,509.29	45.2
548	J-55	2,406.00	2.54	2,509.24	44.8
550	J-56	2,414.00	2.54	2,510.46	41.8
552	J-57	2,415.00	2.54	2,510.54	41.4
554	J-58	2,416.00	2.54	2,510.72	41.1
556	J-59	2,416.00	2.54	2,510.82	41.1
560	J-60	2,424.26	2.54	2,510.03	37.2
563	J-61	2,427.00	2.54	2,509.93	36.0
565	J-62	2,427.00	2.54	2,509.90	35.9
567	J-63	2,427.00	2.54	2,509.86	35.9
570	J-64	2,429.09	2.54	2,509.69	34.9
573	J-65	2,433.00	2.54	2,509.69	33.2
575	J-66	2,431.00	2.54	2,509.64	34.1
577	J-67	2,428.85	2.54	2,510.72	35.5
580	J-68	2,417.24	2.54	2,512.38	41.2
586	J-70	2,420.00	2.54	2,512.55	40.1
593	J-73	2,416.00	2.54	2,511.08	41.2
602	J-76	2,417.00	2.54	2,511.82	41.1
604	J-77	2,417.00	2.54	2,511.78	41.1
612	J-80	2,421.00	2.54	2,511.11	39.1
614	J-81	2,421.00	2.54	2,511.08	39.1
617	J-82	2,401.00	2.54	2,508.63	46.7
621	J-83	2,387.00	2.54	2,508.58	52.7
624	J-84	2,415.00	2.54	2,509.03	40.8
627	J-85	2,398.00	2.54	2,508.82	48.0
630	J-86	2,401.00	2.54	2,508.66	46.7
632	J-87	2,372.88	2.54	2,508.22	58.7
635	J-88	2,373.15	2.54	2,508.31	58.6
643	J-91	2,360.00	2.54	2,508.02	64.2
657	J-97	2,375.00	2.54	2,508.14	57.7
659	J-98	2,398.00	2.54	2,508.09	47.7
661	J-99	2,397.00	2.54	2,508.10	48.2
663	J-100	2,402.00	2.54	2,508.15	46.0
665	J-101	2,401.00	2.54	2,508.15	46.5
668	J-102	2,399.00	2.54	2,508.11	47.3
670	J-103	2,397.00	2.54	2,508.05	48.1
672	J-104	2,404.11	2.54	2,508.15	45.1
675	J-105	2,404.00	2.54	2,508.15	45.2
678	J-106	2,406.00	2.54	2,508.15	44.3
682	J-108	2,416.00	2.54	2,510.08	40.8
692	J-111	2,422.25	2.54	2,511.75	38.8
695	J-112	2,426.89	2.54	2,511.82	36.8
698	J-113	2,429.58	2.54	2,511.75	35.6
701	J-114	2,419.21	2.54	2,511.71	40.1

MDD for Existing System- 20-YEAR (2033)

ID	Label	Elevation (ft)	Demand (gpm)	Hydraulic Grade (ft)	Pressure (psi)
704	J-115	2,417.00	2.54	2,511.38	40.9
707	J-116	2,416.75	2.54	2,510.95	40.8
710	J-117	2,412.81	2.54	2,510.20	42.2
713	J-118	2,415.56	2.54	2,510.21	41.0
728	J-120	2,410.66	2.54	2,510.11	43.1
731	J-121	2,408.44	2.54	2,509.85	44.0
734	J-122	2,407.53	2.54	2,509.69	44.3
740	J-126	2,405.00	2.54	2,509.51	45.3
741	J-127	2,407.90	2.54	2,509.19	43.9
744	J-128	2,401.85	2.54	2,509.19	46.5
747	J-129	2,397.49	2.54	2,509.12	48.4
750	J-130	2,401.82	2.54	2,509.10	46.5
753	J-131	2,394.29	2.54	2,508.86	49.7
756	J-132	2,401.13	2.54	2,507.56	46.1
762	J-134	2,419.40	2.54	2,507.05	38.0
765	J-135	2,422.65	2.54	2,507.05	36.6
768	J-136	2,426.24	2.54	2,507.05	35.0
771	J-137	2,415.87	2.54	2,507.69	39.8
774	J-138	2,377.05	2.54	2,507.98	56.8
777	J-139	2,403.33	2.54	2,507.95	45.4
780	J-140	2,405.01	2.54	2,507.88	44.6
783	J-141	2,383.57	2.54	2,508.18	54.0
786	J-142	2,399.70	2.54	2,508.13	47.0
789	J-143	2,390.64	2.54	2,508.15	50.9
792	J-144	2,372.70	2.54	2,508.28	58.8
795	J-145	2,373.23	2.54	2,508.31	58.6
798	J-146	2,373.51	2.54	2,508.20	58.4
801	J-147	2,400.73	2.54	2,508.68	46.8
804	J-148	2,384.37	2.54	2,508.37	53.8
810	J-150	2,392.81	2.54	2,508.06	50.0
813	J-151	2,401.24	2.54	2,508.05	46.3
816	J-152	2,393.00	2.54	2,508.06	49.9
819	J-153	2,401.82	2.54	2,508.14	46.1
822	J-154	2,409.85	2.54	2,509.56	43.2
825	J-155	2,423.00	2.54	2,510.44	37.9
828	J-156	2,427.49	2.54	2,509.81	35.7
831	J-157	2,431.93	2.54	2,509.64	33.7
834	J-158	2,434.71	2.54	2,509.58	32.5
837	J-159	2,426.85	2.54	2,509.55	35.9
840	J-160	2,409.83	2.54	2,509.11	43.0
843	J-161	2,415.23	2.54	2,509.04	40.7
846	J-162	2,396.18	2.54	2,508.69	48.8
849	J-163	2,405.59	2.54	2,508.90	44.8
852	J-164	2,413.89	2.54	2,509.16	41.3
855	J-165	2,403.20	2.54	2,508.83	45.8

MDD for Existing System- 20-YEAR (2033)

ID	Label	Elevation (ft)	Demand (gpm)	Hydraulic Grade (ft)	Pressure (psi)
858	J-166	2,415.03	2.54	2,510.40	41.3
861	J-167	2,410.45	2.54	2,510.16	43.2
864	J-168	2,408.21	2.54	2,509.72	44.0
867	J-169	2,416.09	2.54	2,510.12	40.8
870	J-170	2,417.97	2.54	2,510.93	40.3
873	J-171	2,422.87	2.54	2,511.38	38.4
876	J-172	2,427.89	2.54	2,510.67	35.9
879	J-173	2,420.91	2.54	2,510.33	38.8
882	J-174	2,412.78	2.54	2,509.90	42.1
885	J-175	2,402.81	2.54	2,509.34	46.2
888	J-176	2,391.89	2.54	2,508.22	50.4
891	J-177	2,385.98	2.54	2,508.24	53.0
894	J-178	2,379.90	2.54	2,508.29	55.7
1016	J-179	2,429.95	2.54	2,510.69	35.0
1020	J-180	2,435.00	2.54	2,510.97	32.9
1028	J-181	2,425.40	2.54	2,509.95	36.7
1032	J-182	2,416.65	2.54	2,509.21	40.1
1036	J-183	2,407.87	2.54	2,509.23	43.9
1042	J-184	2,421.60	2.54	2,509.37	38.0
1053	J-185	2,421.02	2.54	2,510.04	38.6
1062	J-186	2,381.10	2.54	2,508.13	55.1
1067	J-187	2,385.76	2.54	2,508.08	53.0
1112	J-189	2,397.27	2.54	2,507.62	47.8
1116	J-190	2,398.46	2.54	2,509.04	47.9
1120	J-191	2,391.64	2.54	2,508.66	50.7
1125	J-192	2,394.63	2.54	2,509.04	49.6
1129	J-193	2,387.04	2.54	2,508.58	52.7
1133	J-194	2,385.99	2.54	2,508.09	52.9
1137	J-195	2,427.00	2.54	2,507.07	34.7
1139	J-196	2,427.00	2.54	2,507.07	34.7
1141	J-197	2,422.17	2.54	2,507.07	36.8
1150	J-199	2,427.15	2.54	2,507.51	34.8
1154	J-200	2,408.97	2.54	2,510.02	43.8
1158	J-201	2,407.84	2.54	2,509.63	44.1
1162	J-202	2,410.31	2.54	2,509.42	43.0
1166	J-203	2,420.15	2.54	2,507.88	38.0
1170	J-204	2,415.26	2.54	2,507.17	39.8
1174	J-205	2,376.45	2.54	2,508.22	57.1
1178	J-206	2,417.80	2.54	2,509.26	39.7
1182	J-207	2,416.11	2.54	2,509.27	40.4
1186	J-208	2,404.93	2.54	2,509.02	45.1
1190	J-209	2,373.12	2.54	2,508.20	58.6
1194	J-210	2,411.95	2.54	2,507.53	41.4
1198	J-211	2,426.75	2.54	2,509.68	36.0
1202	J-212	2,370.45	2.54	2,508.17	59.7

MDD for Existing System- 20-YEAR (2033)

ID	Label	Elevation (ft)	Demand (gpm)	Hydraulic Grade (ft)	Pressure (psi)
1206	J-213	2,411.44	2.54	2,509.03	42.3
1210	J-214	2,415.13	2.54	2,511.79	41.9
1215	J-215	2,367.85	2.54	2,507.63	60.6
1219	J-216	2,428.26	2.54	2,511.84	36.2
1223	J-217	2,431.87	2.54	2,511.84	34.7
1227	J-218	2,421.47	2.54	2,509.50	38.2
1231	J-219	2,420.19	2.54	2,509.50	38.7
1235	J-220	2,416.49	2.54	2,509.49	40.3
1239	J-221	2,409.59	2.54	2,508.05	42.7
1243	J-222	2,402.23	2.54	2,508.05	45.9
1247	J-223	2,409.71	2.54	2,507.53	42.4
1286	J-226	2,412.43	2.54	2,509.49	42.1
1290	J-227	2,417.18	2.54	2,511.67	41.0
1305	J-229	2,403.92	2.54	2,507.88	45.1
1308	J-230	2,382.54	2.54	2,508.18	54.5
1314	J-231	2,394.24	2.54	2,508.85	49.7
1322	J-232	2,405.67	2.54	2,509.16	44.9
1329	J-233	2,424.14	2.54	2,510.16	37.3
1333	J-234	2,409.88	2.54	2,509.11	43.0
1337	J-235	2,387.45	2.54	2,508.22	52.4
1395	J-242	2,405.66	2.54	2,507.54	44.2
1399	J-243	2,426.83	2.54	2,507.07	34.8
1404	J-244	2,426.85	2.54	2,507.08	34.8
1411	J-245	2,427.00	2.54	2,507.05	34.7
1414	J-246	2,422.19	2.54	2,507.11	36.8
1417	J-247	2,427.00	2.54	2,507.11	34.7
1421	J-248	2,397.91	2.54	2,508.11	47.8
1426	J-249	2,379.12	2.54	2,508.06	55.9
1430	J-250	2,386.50	2.54	2,508.18	52.7
1433	J-251	2,387.74	2.54	2,508.20	52.2
1437	J-252	2,417.00	2.54	2,509.16	40.0
1438	J-253	2,416.45	2.54	2,509.16	40.2
1442	J-254	2,389.00	2.54	2,508.82	51.9
1447	J-257	2,402.45	2.54	2,509.12	46.2
1450	J-258	2,396.00	2.54	2,509.12	49.0
1452	J-259	2,403.00	2.54	2,509.12	46.0
1454	J-260	2,425.78	2.54	2,509.77	36.4
1457	J-261	2,429.70	2.54	2,511.68	35.5
1460	J-262	2,422.00	2.54	2,513.08	39.5
1468	J-264	2,417.00	2.54	2,511.73	41.1

Scenario: MDD

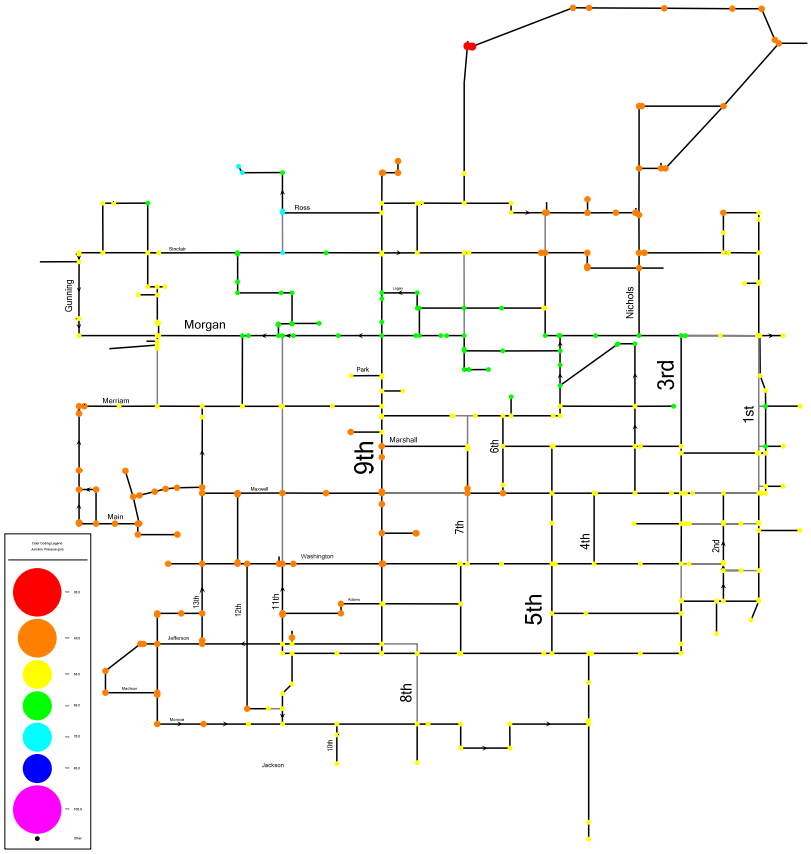

Spot Check Hydrant Analysis for Existing System

Label	ID	Elevation (ft)	Pressure (psi)	FF Needed (gpm)	FF Available (gpm)	FIELD TESTING (psi)			LOCATION
						STATIC	% Diff.	RESIDUAL	
H-1	717	2,422	40.8	1000	1,758	44	7%	32	Monroe & 13th
H-4	720	2,419	42.1	1000	1,843	40	5%	32	12th & Monroe (NE)
H-11	727	2,416	42.9	1000	847	38	13%	34	4th (1700S block, southern end)
H-14	899	2,408	46.1	1000	2,005	41	12%	47	3rd & Jefferson (NE)
H-19	904	2,394	51.4	1000	2,053	46	12%	42	1st & Marshall (SW)
H-22	907	2,426	36.1	1000	1,770	35	3%	34	Alley between Logan & Sinclair
H-28	913	2,416	40.7	1000	1,704	40	2%	38	9th & Lincoln (NE)
H-30	915	2,401	47.8	1000	1,204	47	2%	42	Sinclair & Gunning
H-31	916	2,393	51.4	1000	1,784	50	3%	46	14th & Sinclair (SE)
H-37	922	2,412	43.3	1000	475	11	294%	27	DOT (South of Hwy 2 & 15th)
H-43	928	2,373	60.1	1000	3,500	57	5%	54	9th & Morgan (NE)
H-47	932	2,374	59.8	1000	941	46	30%	44	7th & Park (NE)
H-50	935	2,384	55.3	1000	3,051	56	1%	52	Park & Harker
H-52	937	2,414	42.9	1000	1,844	44	3%	40	5th & Marshall
H-59	944	2,435	34.4	1000	785	33	4%	32	15th & Main
H-64	949	2,415	43.2	1000	2,871	43	0%	40	7th & Jefferson
H-70	955	2,421	40.3	1000	1,143	37	9%	35	8th & Main (SW)
H-74	959	2,428	37.7	1000	2,802	34	11%	33	11th & Washington (NE)
H-84	1075	2,416	39.5	1000	1,081	39	1%	26	Hwy 25 County Shop
H-88	1079	2,409	44.3	1000	982	42	5%	32	Gunning & Hwy 2 (Airport)
H-95	1087	2,398	48.3	1000	2,172	46	5%	42	1st & Morgan
H-97	1089	2,409	43.4	1000	2,633	42	3%	39	2nd & Sinclair (SE)
H-98	1090	2,427	34.8	1000	1,787	30	16%	23	Hospital (front)
H-101	1093	2,395	51.3	1000	2,465	48	7%	44	3rd & Maxwell (SE)
H-104	1096	2,408	46.0	1000	3,500	52	12%	48	5th & Washington (NE)
H-106	1098	2,420	39.1	1000	1,863	34	15%	30	5th & Sinclair (NE)
H-115	1107	2,412	43.9	1000	2,125	44	0%	42	10th & Merrian (NW)
H-117	1109	2,423	40.9	1000	3,225	41	0%	39	11th & Jefferson (Well #6)

TOTAL CHECKED 29 (1/4 of 116)

Number of Hydrants within 5% ***13***

Number of Hydrants within 10% ***19***

Number of Hydrants within 20% ***25***

Scenario: Fire Flow

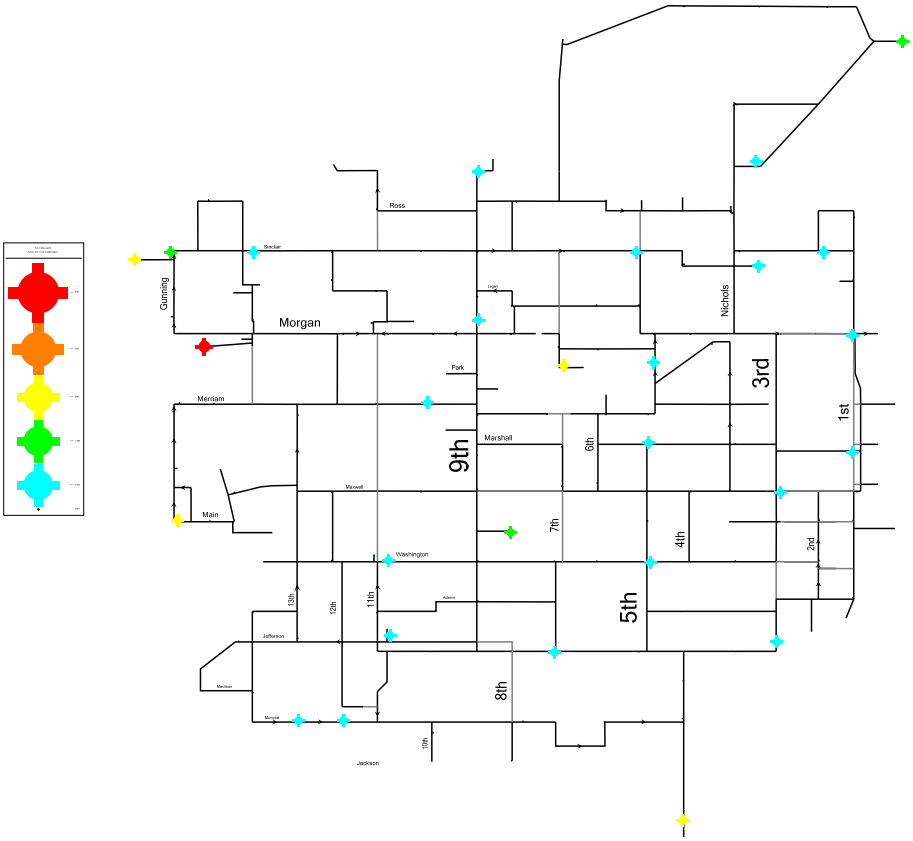

Hydrant Analysis for Existing System (w/ MDD Conditions)

Label	ID	Elevation (ft)	Pressure (psi)	Fire Flow (Needed) (gpm)	Fire Flow (Available) (gpm)	Hydraulic Grade (ft)
H-1	717	2,422	39.2	1,000	1,691	2,512.48
H-2	718	2,427	37.1	1,000	2,294	2,512.55
H-3	719	2,430	36.0	1,000	2,022	2,512.47
H-4	720	2,419	40.5	1,000	1,771	2,512.44
H-6	722	2,417	41.2	1,000	1,338	2,512.12
H-7	723	2,417	41.1	1,000	993	2,511.74
H-8	724	2,417	41.2	1,000	1,247	2,511.69
H-9	725	2,414	42.1	1,000	1,281	2,511.19
H-10	726	2,413	42.5	1,000	1,445	2,510.91
H-11	727	2,416	41.4	1,000	827	2,510.92
H-12	897	2,411	43.4	1,000	1,719	2,510.81
H-13	898	2,408	44.3	1,000	1,848	2,510.54
H-14	899	2,408	44.6	1,000	1,918	2,510.37
H-15	900	2,405	45.6	1,000	2,016	2,510.19
H-16	901	2,408	44.2	1,000	1,531	2,509.86
H-17	902	2,402	46.7	1,000	1,464	2,509.76
H-18	903	2,398	48.7	1,000	1,550	2,509.77
H-19	904	2,394	50.0	1,000	1,995	2,509.43
H-20	905	2,401	46.3	1,000	2,547	2,507.80
H-21	906	2,406	44.1	1,000	2,322	2,507.77
H-22	907	2,426	35.5	1,000	1,738	2,507.88
H-23	908	2,427	35.1	1,000	1,695	2,507.99
H-24	909	2,406	43.9	1,000	3,500	2,507.34
H-25	910	2,426	35.1	1,000	2,004	2,507.06
H-26	911	2,422	36.9	1,000	1,878	2,507.06
H-27	912	2,419	38.2	1,000	1,845	2,507.06
H-28	913	2,416	40.0	1,000	1,667	2,507.98
H-29	914	2,393	50.1	1,000	1,483	2,508.55
H-30	915	2,401	46.6	1,000	1,164	2,508.54
H-31	916	2,393	50.2	1,000	1,710	2,508.55
H-32	917	2,379	56.2	1,000	2,359	2,508.53
H-33	918	2,377	57.0	1,000	2,547	2,508.41
H-34	919	2,403	45.7	1,000	3,500	2,508.32
H-35	920	2,405	44.8	1,000	1,643	2,508.24
H-36	921	2,402	46.2	1,000	2,059	2,508.65
H-37	922	2,412	42.1	1,000	467	2,508.66
H-38	923	2,405	44.9	1,000	1,745	2,508.66
H-39	924	2,392	50.6	1,000	2,568	2,508.72
H-40	925	2,386	53.2	1,000	2,732	2,508.70
H-41	926	2,386	53.2	1,000	2,929	2,508.73
H-42	927	2,380	55.9	1,000	3,447	2,508.77
H-43	928	2,373	59.0	1,000	3,500	2,508.74
H-44	929	2,373	59.0	1,000	3,444	2,508.68

Label	ID	Elevation (ft)	Pressure (psi)	Fire Flow (Needed) (gpm)	Fire Flow (Available) (gpm)	Hydraulic Grade (ft)
H-45	930	2,373	58.9	1,000	3,500	2,508.79
H-46	931	2,391	51.2	1,000	1,985	2,508.60
H-47	932	2,374	58.6	1,000	922	2,508.69
H-48	933	2,400	47.1	1,000	2,546	2,508.57
H-49	934	2,384	54.2	1,000	3,175	2,508.63
H-50	935	2,384	54.1	1,000	2,944	2,508.87
H-51	936	2,400	47.4	1,000	2,395	2,509.24
H-52	937	2,414	41.5	1,000	1,789	2,509.77
H-53	938	2,403	46.0	1,000	2,161	2,509.40
H-54	939	2,396	49.1	1,000	3,500	2,509.23
H-55	940	2,415	41.0	1,000	3,500	2,509.61
H-56	941	2,410	43.2	1,000	1,888	2,509.73
H-57	942	2,410	43.5	1,000	1,649	2,510.24
H-58	943	2,427	36.3	1,000	883	2,510.25
H-59	944	2,435	32.9	1,000	748	2,510.29
H-60	945	2,432	34.0	1,000	852	2,510.35
H-61	946	2,428	36.0	1,000	1,067	2,510.53
H-62	947	2,423	38.2	1,000	2,479	2,511.13
H-63	948	2,430	35.3	1,000	2,509	2,511.39
H-64	949	2,415	41.7	1,000	2,704	2,511.08
H-65	950	2,411	43.5	1,000	2,715	2,510.84
H-66	951	2,418	40.6	1,000	3,207	2,511.61
H-67	952	2,421	39.0	1,000	3,348	2,510.99
H-68	953	2,416	41.1	1,000	3,434	2,510.78
H-69	954	2,413	42.4	1,000	3,497	2,510.55
H-70	955	2,421	38.9	1,000	1,125	2,510.69
H-71	956	2,417	40.4	1,000	2,484	2,509.82
H-72	957	2,422	38.3	1,000	3,436	2,509.97
H-73	958	2,425	36.9	1,000	1,703	2,510.60
H-74	959	2,428	36.1	1,000	2,601	2,511.36
H-75	960	2,403	46.4	1,000	3,500	2,509.96
H-76	961	2,402	46.8	1,000	1,611	2,509.85
H-77	962	2,423	38.6	1,000	2,248	2,512.08
H-78	963	2,408	44.1	1,000	2,506	2,509.84
H-79	964	2,406	45.1	1,000	2,565	2,509.47
H-80	1009	2,408	44.3	1,000	2,148	2,510.39
H-82	1061	2,381	55.3	1,000	2,297	2,508.62
H-83	1066	2,386	53.2	1,000	2,234	2,508.56
H-84	1075	2,416	39.5	1,000	1082	2,507.07
H-86	1077	2,412	41.5	1,000	3,500	2,507.75
H-87	1078	2,368	60.7	1,000	469	2,507.97
H-88	1079	2,409	43.2	1,000	955	2,508.54
H-89	1080	2,410	42.9	1,000	890	2,508.54
H-90	1081	2,417	40.6	1,000	1,298	2,510.17

Label	ID	Elevation (ft)	Pressure (psi)	Fire Flow (Needed) (gpm)	Fire Flow (Available) (gpm)	Hydraulic Grade (ft)
H-91	1082	2,420	39.1	1,000	1,216	2,510.18
H-92	1083	2,422	38.4	1,000	1,148	2,510.19
H-93	1084	2,432	34.9	1,000	2,458	2,512.56
H-94	1086	2,409	44.1	1,000	2,037	2,510.71
H-95	1087	2,398	47.6	1,000	2,133	2,507.88
H-96	1088	2,399	48.2	1,000	1,473	2,509.69
H-97	1089	2,409	42.8	1,000	2,561	2,507.76
H-98	1090	2,427	34.7	1,000	1,780	2,507.08
H-99	1091	2,427	34.7	1,000	2,498	2,507.08
H-100	1092	2,392	51.0	1,000	3,195	2,509.17
H-101	1093	2,395	49.9	1,000	2,379	2,509.63
H-102	1094	2,427	35.0	1,000	3,500	2,507.71
H-103	1095	2,386	53.1	1,000	2,481	2,508.50
H-104	1096	2,408	44.6	1,000	3,500	2,510.27
H-105	1097	2,410	43.4	1,000	2,668	2,510.04
H-106	1098	2,420	38.3	1,000	1,815	2,508.24
H-107	1099	2,415	40.0	1,000	2,411	2,507.24
H-108	1100	2,377	57.3	1,000	1,188	2,508.71
H-109	1101	2,418	39.8	1,000	2,627	2,509.87
H-110	1102	2,416	40.7	1,000	2,767	2,509.87
H-111	1103	2,405	45.3	1,000	925	2,509.60
H-112	1104	2,373	58.8	1,000	948	2,508.69
H-113	1105	2,427	36.3	1,000	3,206	2,510.30
H-114	1106	2,371	59.9	1,000	3,500	2,508.61
H-115	1107	2,412	42.5	1,000	2,047	2,509.62
H-116	1108	2,415	42.3	1,000	2,223	2,512.50
H-117	1109	2,423	39.4	1,000	3,003	2,513.79
H-118	1110	2,428	36.7	1,000	2,799	2,512.56
H-119	1111	2,387	52.9	1,000	2,144	2,509.12

Scenario: Fire Flow

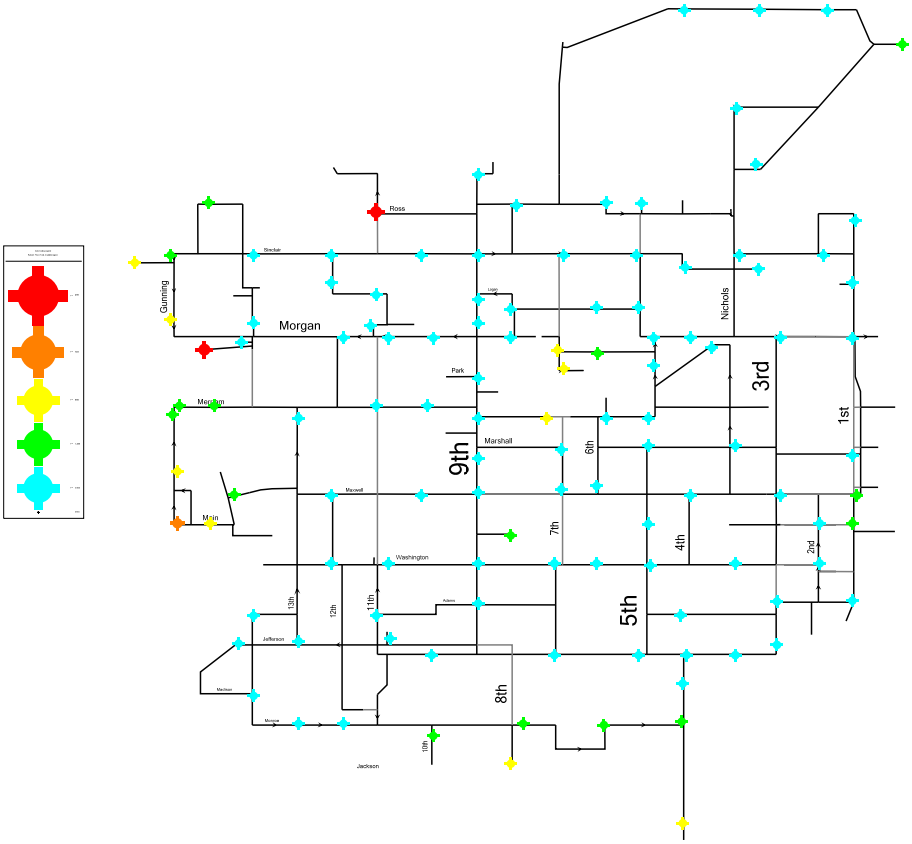

Appendix H 2011 LEAK DETECTION REPORT FROM UTILITY SERVICES ASSOCIATES

Final Report

Water Line Leak Detection Project for:

City of Davenport, WA

Project Dates:

9/6/2011 through 09/8/2011

utility services associates
EVALUATE. MANAGE. CONSERVE.

919 SW 150th St, Suite B
Burien, WA 98166

Phone: (877) 585-LEAK(5325)
Fax: (206) 244-0278
Email: info@leakdetectionservice.com

Web: www.leakdetectionservice.com

TABLE OF CONTENTS

COVER LETTER

EXECUTIVE SUMMARY

PROJECT OBSERVATIONS

SURVEY PHASE REVIEW

PINPOINTING PHASE REVIEW

LEAK REPORTS

CONCLUSION

COVER LETTER

utility services associates
EVALUATE. MANAGE. CONSERVE.

October 11, 2011

City of Davenport
Attn: Fred Bell
PO Box 26
Davenport, WA 99122

Dear Mr. Bell:

Utility Services Associates, LLC, (USA) is pleased to submit the enclosed Final Report on leak detection services recently completed.

The information contained in this Final Report details the procedures and results specific to this project. When applicable, recommendations have been made concerning the best approach for the repair of leaks detected and preparation for future leak detection projects.

As you review this Final Report, please pay close attention to the Field Technician's remarks and field observations in the Project Observation section of this report. These may assist you in determining the best course of action regarding specific leaks.

At times specific individual Leak Reports may differ in the Final Report from those provided during the course of the project. These changes, usually insignificant, generally pertain to the manner in which we report leaks and do not alter the methods used or results of pinpointing.

We strongly suggest you contact us prior to excavating any leak that we have labeled with "CAUTION" for further explanation.

This leak detection project is productive since we pinpointed leakage that, when repaired, can reduce your water loss, saving the City of Davenport dollars now and in the future. We appreciate your confidence in USA. If you have any questions, call us at (877) 585-5325 or (206) 244-0370.

Sincerely,

Rob Meston
President

919 SW 150th St.
Suite B
Burien, WA 98166

Office: 877.585.LEAK (5325)
Fax: 206.244.0278
www.leakdetectionservice.com

EXECUTIVE SUMMARY

LEAK DETECTION EXECUTIVE SUMMARY

From September 6, 2011 through September 8, 2011, USA completed a leak survey for the **City of Davenport, WA.** Our Field Technician, Jeff Benjamin, used and appreciated the information provided by Fred Bell to expedite and provide an accurate survey. The tables below detail the information gathered.

Time Spent on Project	
Surveying:	16.5 Hr
Pinpointing:	3.25 Hr
Other Time:	4.25 Hr
Total Time:	24 Hr

Total Areas Surveyed	
Total Distance in Miles	8.875
Total Distance in feet	46,860

The mileage was estimated by the technician and may not match maps.

Access Points Contacted	
Hydrants	80
Valves	176
Services	48
Other	15
Total	319

Leak Type Noises Detected	
Hydrants	4
Valves	5
Services	2
Other	0
Total	11

Leaks Pinpointed	
Main	0
Hydrant	3
Valve	0
Service Line	0
Service Connection	1
Curbstop	0
Total	4

Total Water Loss Identified	
Gallons Per Minute (GPM):	11.5
Gallons Per Day (GPD):	16,560
Gallons Per Year (GPY):	6,044,400

Average Water Loss Identified	
Gallons Per Minute (GPM):	2.875
Gallons Per Day (GPD):	4,140
Gallons Per Year (GPY):	1,511,100

This project was divided into two phases; the survey phase and the pinpointing phase. The following pages outline exactly how those two phases progressed and the results of each. Any leaks pinpointed will be detailed in the attached Leak Reports.

PROJECT OBSERVATIONS

PROJECT OBSERVATIONS
(Water Distribution Lines)

GENERAL
On September 08, 2011, USA completed a 3-day leak detection project for the City of Davenport, WA. The notes below have been generated by our Field Technician and have been included as part of the Executive Summary.

SPECIFICS
The survey was broken down in two different phases:

1. *Survey Phase* – sounding of appurtenances and recording leak type noises that were detected.

2. *Pinpointing Phase* – pinpointing noises that were detected during the Survey Phase.

1. Survey Phase Information

Excellent preparedness combined with good sound travel and access helped to greatly expedite the survey. Appurtenances were found in mostly good condition.

The project was conducted in an effort to locate some or all of the estimated 24% water loss. The survey focused on areas as pre-listed on a sheet given to our crew at the beginning of the project. In addition to those areas (see Area's Surveyed Report for exact locations), we covered all areas south of and including Merriam and Spring Streets.

Overall, the survey portion of this project progressed extremely well.

2. Pinpointing Phase Information

As result of our survey, we were able to locate and pinpoint four (4) leaks. In addition, we have listed one (1) area as "undefined", which are areas where we suspect one or more leaks may exist, however, after extensive investigation, we were not able to pinpoint the anomalies. For additional information and a drawing on each leak, please refer to the Leak Report section of this Final Report:

Undefined Leak Report #U-1 – Hospital Entrance on Nicholls St.
We detected noise at the hydrant and irrigation box only. We suspect the leak is at or near the hydrant but could not confirm this. We suggest exposing the base of the hydrant and excavate towards the main line connection. If no leak is found within 3' of the hydrant, suspend the excavation and this area will need to be checked at a later date to see if the suspected leak has worsened (making more noise).

CONCLUSION
Although several leaks were detected, indicating leaks don't always readily surface, overall, the lines surveyed were found to be in very good condition. As discussed with field personnel, we suggest expanding your survey to include leak detection on the remaining balance of the system. In addition, other areas of loss, with meters in particular, be subject to close review and an audit if none has already been done.

We suggest an aggressive hydrant maintenance program to limit the amount of loss to hydrant leaks.

Make note of our estimates when repairing the leaks as this may have a significant impact when calculating water loss figures.

We wish to thank Fred Bell for his field assistance, which proved invaluable. We look forward to working with City of Davenport on future conservation projects.

Compiled from field notes respectfully submitted by:

Jeff Benjamin
Field Technician

SURVEY PHASE REVIEW

SURVEY PHASE REVIEW
(Water Distribution Lines)

The first step in our survey was to review the distribution maps of the system for familiarization of the pipe network and available appurtenances to be used for contact points.

As the leak survey progressed, we determined the distances that even quiet leak type sounds traveled in various pipe materials, pipe sizes and pressure zones in each area of the system. This might have been done by slightly turning on fire hydrants, hose bibs, etc., creating a simulated, quiet leak sound. Appurtenances in that area were then checked with a sound amplification instrument to see how far the simulated leak sounds traveled, thus determining how often we would make contact with appurtenances in a given section of the water distribution system. In most areas, contact was made with pipe appurtenances at intervals no greater than 300 feet where contact points were available and accessible at pre-determined distances as noted in Paragraph B (whichever distance is necessary to obtain complete coverage). This allowed for even more quiet leaks to be located. Whenever we surveyed PVC lines, all available appurtenances were contacted.

We then conducted a comprehensive survey by making physical contact with all available main line appurtenances (valves, hydrants, etc.) and necessary customer services. USA used a sonic leak detection amplification instrument designed for this purpose.

Appurtenances Surveyed

Hydrant	80
Valves	176
Services	48
Other	15
Total	**319**

When normal contact points were not available or could not be created within a reasonable distance, we made an attempt to use a sonic ground listening instrument to make physical ground contact at intervals no greater than 6 feet directly over the pipe. If conditions did not allow this procedure our Field Technician advised you at time of project and notes of such are included in the Project Observations. Ground listening devices are employed when ground cover is pavement, cement or similar hard surface.

When ground cover was not a hard surface and normal contact points were not available, we made an attempt to use probe rods or a specially designed sounding plate at 6-foot intervals. A sound amplification instrument with 3VG or greater transducer was employed in conjunction with this equipment, directly over the pipe. If conditions did not allow this procedure our Field Technician advised you at time of project and was detailed in the Project Observations section of this Final Report. Direct contact to the main line at intervals outlined in Preparation for Service resulted in the most thorough survey.

A detailed report of decibel levels at suspected leak sound locations and observations were compiled during the survey for reinvestigation and possible pinpointing at a later time. This reinvestigation increased the speed of the survey and eliminated correlating on most false leak sounds.

Leak Type Noises Detected

Contact Points	Noises Detected
Hydrant	4
Valves	5
Services	2
Other	0
Total	**11**

All indications of leaks found during the survey were verified a second time, after which, the leaks were pinpointed with a computer based sound correlator when possible. Pinpointing information can be found in the Pinpointing and Leak Reports Sections.

Areas Surveyed

Street	From	To	Distance
Maxwell St	12th St	7th St	1,790
Morgan St	1st St	4th St	1,290
Morgan St	City Limits	4th St	4,025
Ross St	Lift Station	9th St	1,250
Monroe St	8th St	12th St	1,670
Main St	12th St	City Limits	1,375
12th St	Morgan St	Merriam St	900
Merriam St	9th St	14th St	1,775
Maxwell St	3rd St	1st St	725
1st St	Maxwell St	Morgan St	950
Nicolls St	Sinclair St	Hospital	1,125
Nicolls St	Public Works Bldg	Hospital	2,215
Alley	5th St	8th St	950
Matterly S. L.	9th St	910 Park	175
9th St	Park	Morgan St	300
Maxwell St	13th St	14th St	400
14th St	Main St	Fairgrounds	450
15th St	Main St	Fairgrounds	375
Washington St	14th St	2nd St	4,270
Adams St	1st St	5th St	1,625
Sports Complex	Sports Complex	Sports Complex	2,500
4th St	Jefferson	1600 4th St	1,875
Jefferson St	3rd St	14th St	4,300
Adams St	14th St	7th St	2,650
8th St	Monroe St	Jackson St	350
Main St	9th St	8th St	450
Main St	1st St	East end	400
Maxwell St	3rd St	7th St	1,525
Marshall St	6th St	1st St	1,950
Marshall St	7th St	9th St	675
Merriam St	9th St	Nicholls	1,975
Spring St	Harker St	Nicholls	575
Total Area Surveyed in Feet			**46.860**
Total Area Surveyed in Miles			**8.875**

End of Section

PINPOINTING PHASE REVIEW

PINPOINTING PHASE REVIEW
(Water Distribution Lines)

All indications of leaks found during the survey were verified a second time, after which, the leaks were pinpointed with a computer based sound correlator when possible. Pinpointing leak locations through interpretation of sound intensity, either by ear, decibel metering or other like methods was not used when contact points were available for use with the correlator. However, ground listening devises were used as a quick double check on pinpointed leaks.

The equipment used did not normally require valves to be operated during surveying and pinpointing. However, on occasion, services or valves were operated to eliminate service draw noises or to change velocity noise.

The correlator equipment used had the capability to prompt the operator to input the variables when different pipe sizes and/or pipe material were encountered in the same span to be investigated. This is necessary to insure accuracy of results based on the automatic computation of the correct leak sound velocity in leak pinpointing operations. Our correlators have the capability of correlating up to seven various pipe sizes and types at one time in a given space. To insure effective performance in all field environments encountered in the distribution system (i.e. traffic noise, draw, pump operation, industrial noise, etc.), the correlator equipment provides 16 auto filter options and/or infinite manual filter options.

We provided a copy of leak reports, when pinpointed, which included leak locations and estimated GPM loss.

Leaks Pinpointed

Number	Leak Type	Location	GPM
1	Hydrant	3rd St & Morgan St	1.00
2	Hydrant	8th St & alley north of Morgan St	0.50
3	Service Connection	312 Morgan St	5.00
4	Hydrant	Spring St & Nicholls St	5.00
Total			**11.50**

These leak reports, also included a leak repair priority classification. These classifications are as follows:

Class I Any leak which is hazardous in terms of potential undermining, possibly resulting in surface collapse, encroachment and/or damage to nearby utilities, commercial or private properties or leaks severe enough to warrant immediate repair.

Class II All leaks that display water losses significant enough to be monitored on a regular repair schedule.

Class III Relatively small leaks that should be repaired as workload permits.

Repair Priority

Number	Leak Type	Location	GPM
Total Class I			**0.00**

Number	Leak Type	Location	GPM
3	Service Connection	312 Morgan St	5.00
Total Class II			**5.00**

Number	Leak Type	Location	GPM
1	Hydrant	3rd St & Morgan St	1.00
2	Hydrant	8th St & alley north of Morgan St	0.50
4	Hydrant	Spring St & Nicholls St	5.00
Total Class III			**6.50**

Whenever any of the leaks detected by USA were repaired prior to completion of the field work, we gave the City of Davenport the option to have that section of the system re-surveyed to be sure no very quiet leaks were missed due to an over powering noisy leak sound.

Please note that leakage that was detected and pinpointed may be larger or smaller than estimated. Estimates are based on several variables including type and size of pipe, pressure and interpretation of correlation filter results.

It should be noted that we have listed one area as "Undefined". This is an area where we believe one or more leaks exist, however, after spending considerable time at each location, we could not pinpoint the suspect leakage. This may be due to one or more of many different variables including; poor sound travel, limited number of appurtenances, etc. For further information and/or assistance, please contact our main office.

Undefined Leaks

Leak Location	Notes
Hospital Entrance - Nicholls St	Located lines. Exercised hydrant and used ground mic. No correlation results. Noise on hydrant and irrigation box.

End of Section

LEAK REPORTS

Leak Report

Utility Services Associates, LLC

Location: 3rd St. & Morgan St.
Map #: 9 GPS:
Remarks: 1956 Ludlow hydrant leaking. Valve is quiet.
Leak Type: Hydrant
Recommendations: Repair / Replace

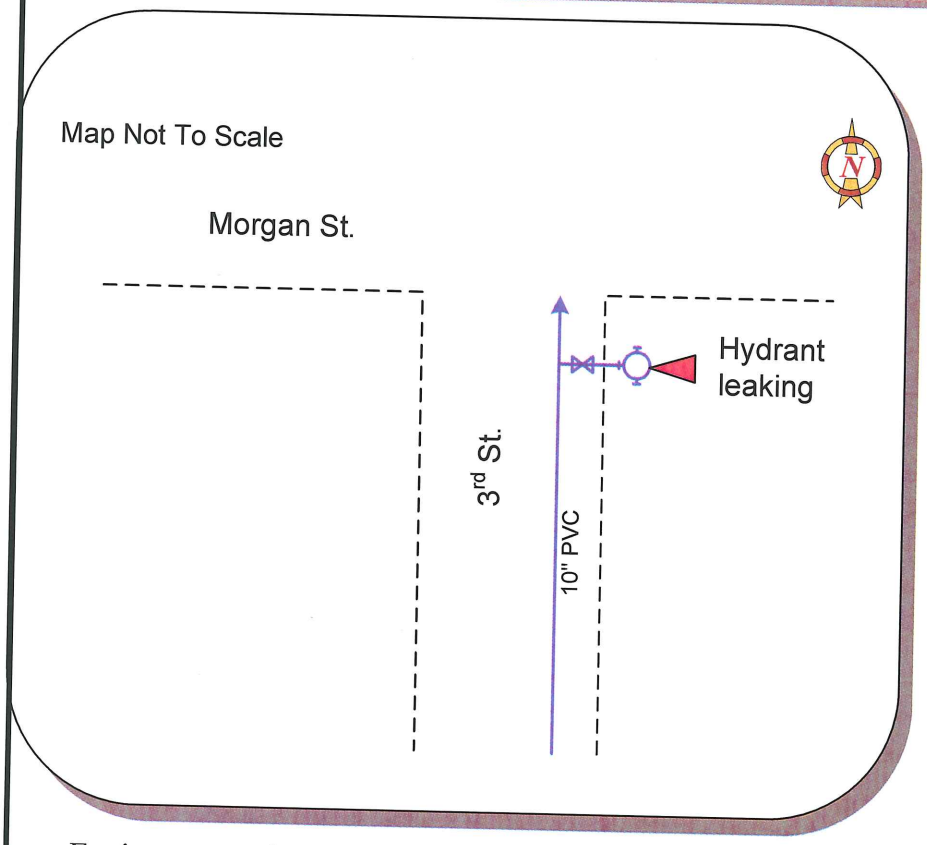

Field Tech: JB
Leak No: 1
Leak Class: III
Leak Rate: 1.0 GPM
Cover Type: Gravel
Site Marked: No
Date: 09/06/11
Job No: 11087

Space left blank for digital photo.

Equipment used: LD-15 Portable Listening Device

Computer Correlation Results

Scan Time	Grade	Dist "Red"	Dist "Blue"

Water Loss
(this leak, in gallons)

DAILY 1,440
WEEKLY 10,080
MONTHLY 40,320

Leak Report

Utility Services Associates, LLC

Location: 8th St & Alley north of Morgan St.
Map #: 7 GPS:
Remarks: 1953 Ludlow hydrant leaking. Vale is quiet.
Leak Type: Hydrant
Recommendations: Repair / Replace

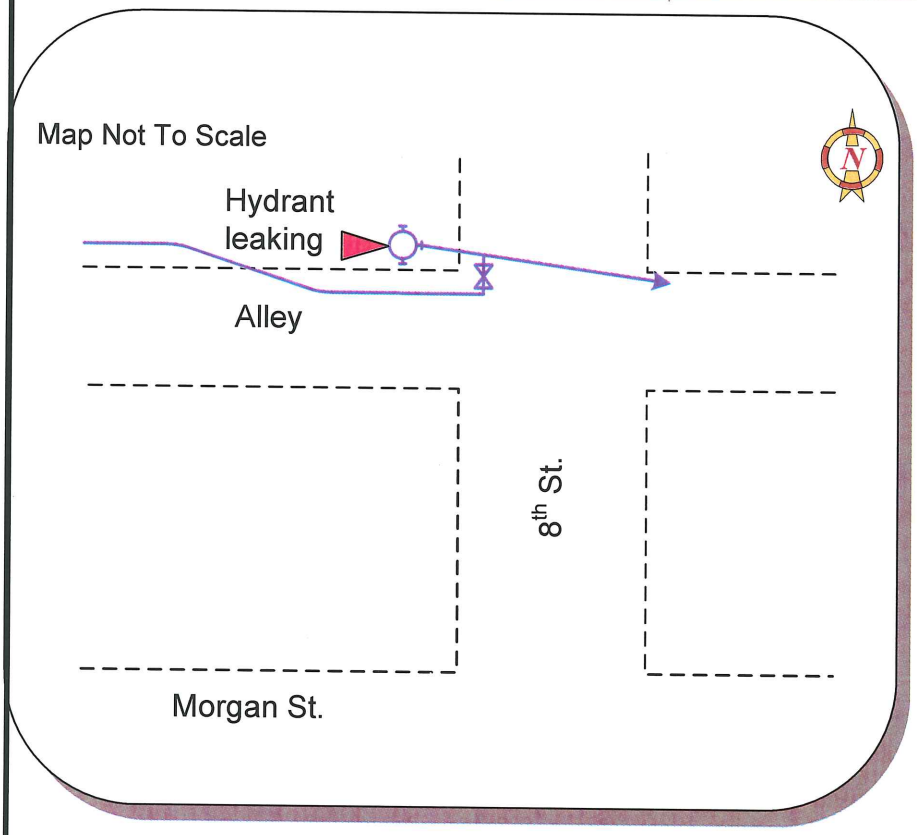

Field Tech: JB
Leak No: 2
Leak Class: III
Leak Rate: .50 GPM
Cover Type: Gravel
Site Marked: No
Date: 09/06/11
Job No: 11087

Space left blank for digital photo.

Equipment used: LD-15 Portable Listening Device

Computer Correlation Results

Scan Time	Grade	Dist "Red"	Dist "Blue"

Water Loss
(this leak, in gallons)

DAILY 720
WEEKLY 5,040
MONTHLY 20,160

Leak Report

Utility Services Associates, LLC

Location: 312 Marshall St.
Map #: 11 GPS:
Remarks: Noise on valves and meters correlated to service connection. Verified with multiple setups.
Leak Type: Service Connection
Recommendations: Excavate & Repair

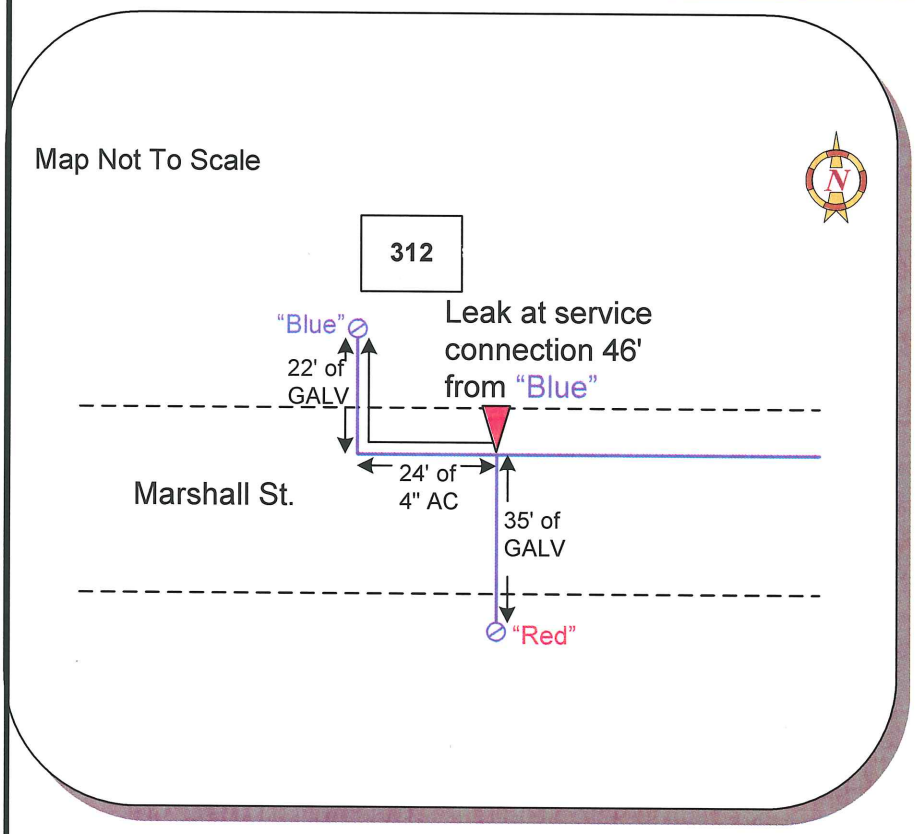

Field Tech: JB
Leak No: 3
Leak Class: II
Leak Rate: 5.0 GPM
Cover Type: Asphalt
Site Marked: Yes
Date: 09/08/11
Job No: 11087

Space left blank for digital photo.

Equipment used: S-30 Portable Listening Device & LC-2500 Correlator

Computer Correlation Results

Scan Time	Grade	Dist "Red"	Dist "Blue"
90	A	35'	46'

Water Loss
(this leak, in gallons)

DAILY 7,200
WEEKLY 50,400
MONTHLY 201,600

Leak Report

Utility Services Associates, LLC

Location: Spring St. & Nicholls St.
Map #: 8 GPS:
Remarks: Ludlow hydrant leaking.
Leak Type: Hydrant
Recommendations: Excavate & Repair

Map Not To Scale

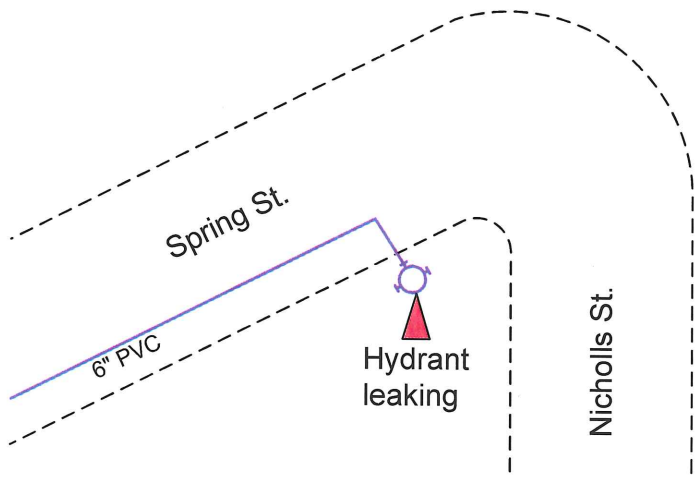

Field Tech: JB
Leak No: 4
Leak Class: III
Leak Rate: 5.0 GPM
Cover Type: Gravel
Site Marked: No
Date: 09/08/11
Job No: 11087

Space left blank for digital photo.

Equipment used: LD-15 Portable Listening Device

Computer Correlation Results

Scan Time	Grade	Dist "Red"	Dist "Blue"

Water Loss
(this leak, in gallons)

DAILY 7,200
WEEKLY 50,400
MONTHLY 201,600

Leak Report

Utility Services Associates, LLC

Location: Hospital Entrance – Nicholls St.
Map #: _____ GPS: _____
Remarks: Located lines. Exercised hydrant and used ground mic. Could not get any correlation results. Noise on hydrant and irrigation box.
Leak Type: Undefined
Recommendations: Further investigation required

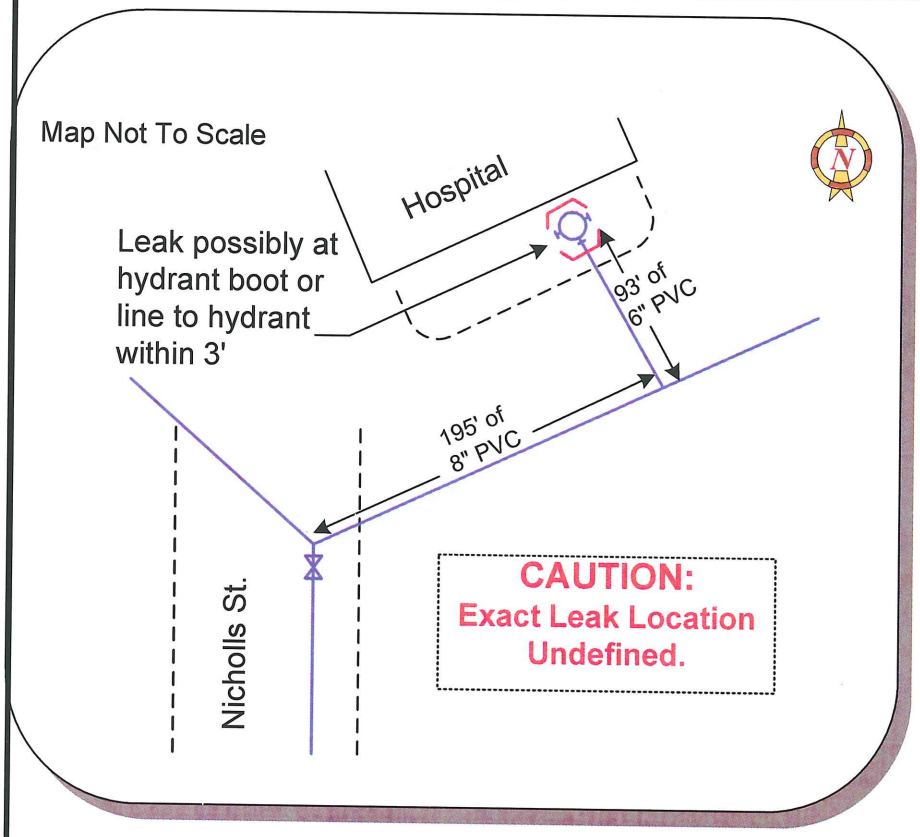

Field Tech: JB
Leak No: U-1
Leak Class: N/A
Leak Rate: 0 GPM
Cover Type: Asphalt/Soil
Site Marked: No
Date: 09/07/11
Job No: 11087

Space left blank for digital photo.

Equipment used: LD-12 & S-30 Portable Listening Devices
IC-2500 Correlator & Probe Rod

Computer Correlation Results

Scan Time	Grade	Dist "Red"	Dist "Blue"

Water Loss
(this leak, in gallons)

DAILY .....N/A
WEEKLY .....N/A
MONTHLY .....N/A

CONCLUSION

utility services associates
EVALUATE. MANAGE. CONSERVE.

LEAK SURVEY CONCLUSION

Our thanks to Fred Bell and all persons involved with this project for their assistance in gathering all the necessary paperwork and personnel to create, with USA, a mutually beneficial leak detection project.

With this survey you have demonstrated concern for prudent water utilization and conservation.

Capitalizing on the most advanced leak detection technology available today, USA has successfully completed this Leak Detection Survey. The contents of this Final Report provide the City of Davenport with a permanent record of the activities performed to complete a Leak Survey along with the results achieved.

An important characteristic of this Leak Report is that the facts contained herein can be used in formulating a database for decision making regarding: the need for possible future meter programs, rehabilitation and pipe line replacement and/or the investigation of new water sources, etc. These types of decisions, regarding your utilization of water, now can be predicated more on facts rather than supposition or conjecture.

Prompt repair of any leaks reported provide an immediate benefit to the City of Davenport, which includes recovery of most water revenue and water conservation, etc.

Having achieved these results, we recommend that you continue to set up the infrastructure necessary to continue investigating leakage in the water distribution system. Implementation of any on-going leak survey program will ensure that leak losses are kept to a minimum, and the added enhancement of saving costs due to emergency call outs.

Utility Services Associates, LLC, is proud to have served the City of Davenport in this way and we wish to thank you for your substantial assistance and cooperation in this project.

If you or your staff has any questions regarding this Final Report, please feel free to call us at (877) 585-5325 or (206) 244-0370.

Best Regards,

Rob Meston
President

SW 150th St.
e B
en, WA 98166

Office: 877.585.LEAK (5325)
Fax: 206.244.0278
www.leakdetectionservice.com

Utility Services Associates LLC
You Leak, We Seek™

FIELD REPORT

Leak Report # 3

Map#:	11	Client:	C/O DAVENPORT	Date:	9-8-11
Location:	312 MARSHALL			GPS:	
Remarks:	NOISE ON VALVES AND METERS CORRELATED TO SERVICE connection.				
Tech Initials:	JS	Min. Spent	60	Marked?	(Y) N
		Classification	☐ Class I ☑ Class II ☐ Class III	GPM	5.0
				Daily	

Leak Diagram

Note: Map is not to scale

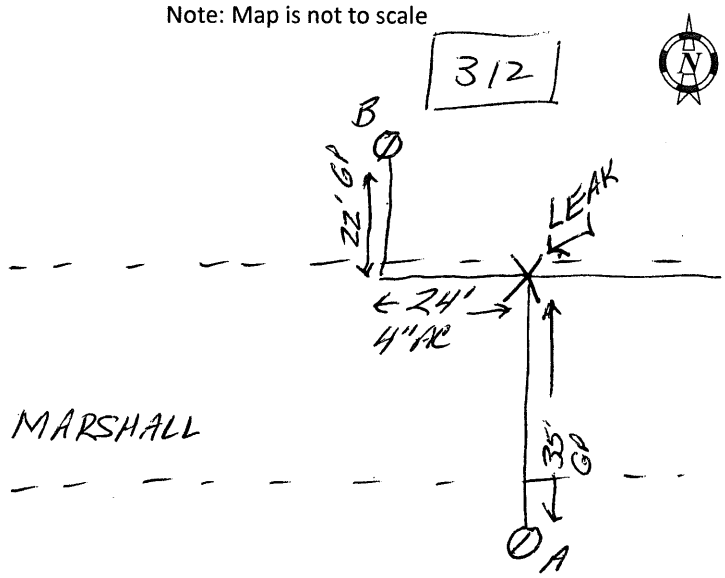

Cover Type
- ☐ Asphalt
- ☐ Gravel
- ☐ Concrete
- ☐ Soil

Leak Type
- ☐ Main
- ☐ Curb Stop
- ☐ Hydrant
- ☐ Valve
- ☐ Serv. Line
- ☐ Meter
- ☑ Serv. Connection
- ☐ Other
- ☐ Undefined

Action Taken/ Recommended
- ☐ Flushed Hydrant - Leak Stopped
- ☐ Flushed Hydrant - Still Leaking
- ☐ Repair / Replace
- ☑ Excavate & Repair
- ☐ Install additional access
- ☐ Resurvey following repairs
- ☐ Isolated to eliminate flow
- ☑ Verified with Multiple Set-ups

Correlation Data

Scan Time	Point Height Grade	Dist. From "RED" or "A"	Dist. From "Blue" or "B"
90	A	35	46
PAGE#			

Equipment Used
- ☐ LD-15
- ☐ Probe Rod
- ☑ S-30
- ☐ Accucorr
- ☐ Tri-Corr 2001
- ☐ Helium Detector
- ☐ LD-12
- ☐ Line Locator
- ☑ LC-2500
- ☐ Visible

System Type
- ☐ Transmission System
- ☐ Irrigation System
- ☑ Distribution System
- ☐ Fire Suppression

Utility Services Associates LLC
You Leak, We Seek™

FIELD REPORT

Leak Report # 4

Map#:	8	Client:	C/O DAVENPORT	Date:	9-8-11
Location:	SPRING AND NICHOLLS			GPS:	
Remarks:	LUDLOW HYDRANT IS LEAKING				

Tech Initials:	B	Min. Spent	10	Marked?	Y (N)	EST. Water Loss	
		Classification	☐ Class I	☐ Class II	☑ Class III	GPM	5.0
						Daily	

Leak Diagram

Note: Map is not to scale

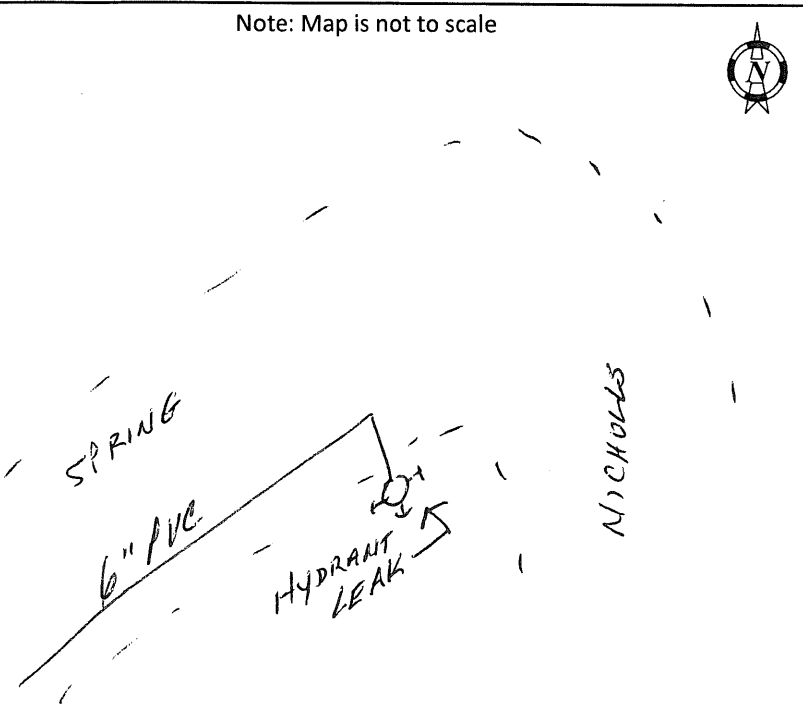

Cover Type

- ☐ Asphalt
- ☑ Gravel
- ☐ Concrete
- ☐ Soil

Leak Type

- ☐ Main
- ☐ Curb Stop
- ☑ Hydrant
- ☐ Valve
- ☐ Serv. Line
- ☐ Meter
- ☐ Serv. Connection
- ☐ Other
- ☐ Undefined

Action Taken/ Recommended

- ☐ Flushed Hydrant - Leak Stopped
- ☐ Flushed Hydrant - Still Leaking
- ☐ Repair / Replace
- ☑ Excavate & Repair
- ☐ Install additional access
- ☐ Resurvey following repairs
- ☐ Isolated to eliminate flow
- ☐ Verified with Multiple Set-ups

Correlation Data

Scan Time	Point Height Grade	Dist. From "RED" or "A"	Dist. From "Blue" or "B"
PAGE#			

Equipment Used

- ☑ LD-15
- ☐ Probe Rod
- ☐ S-30
- ☐ Accucorr
- ☐ Tri-Corr 2001
- ☐ Helium Detector
- ☐ LD-12
- ☐ Line Locator
- ☐ LC-2500
- ☐ Visible

System Type

- ☐ Transmission System
- ☐ Irrigation System
- ☑ Distribution System
- ☐ Fire Suppression

Utility Services Associates LLC
You Leak, We Seek™

FIELD REPORT

Leak Report # U-1

Map#:	N/A	Client:	C/o DAVENPORT	Date:	9-7-11
Location:	HOSPITAL ENTRANCE - NICHOLS			GPS:	
Remarks:	LOCATED LINES; ground mic'd area; exercised hydrant. Would not correlate. Noise on hydrant and irrigation box.				

Tech Initials:	JB	Min. Spent	90	Marked?	Y (N)	EST. Water Loss	
		Classification	☐ Class I	☐ Class II	☑ Class III	GPM	5.0
						Daily	

Leak Diagram

Note: Map is not to scale

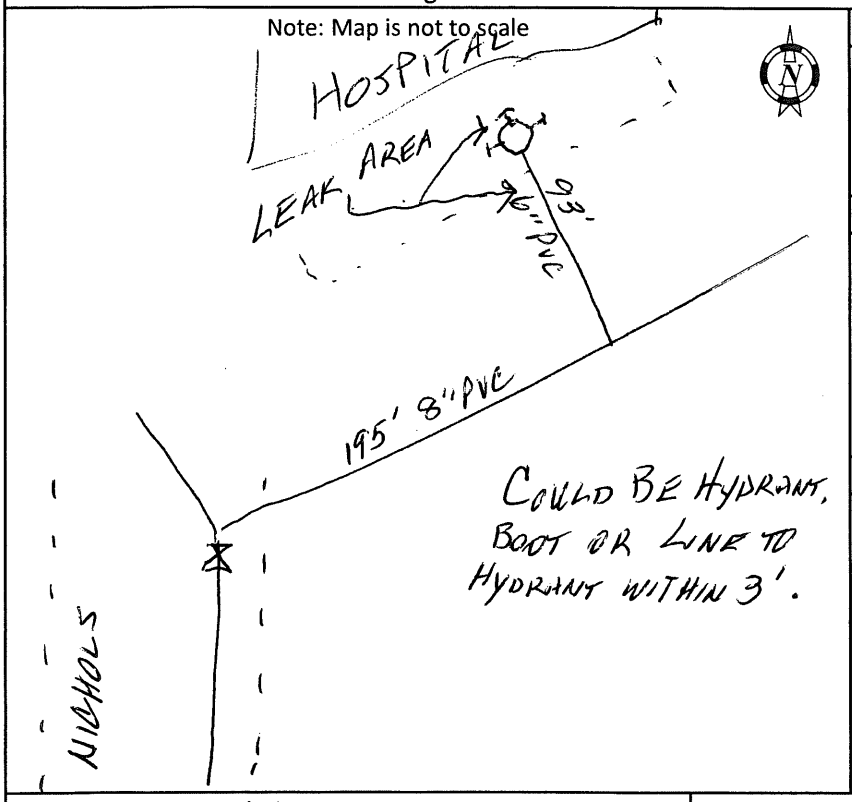

Cover Type
- ☑ Asphalt
- ☐ Gravel
- ☐ Concrete
- ☑ Soil

Leak Type
- ☐ Main
- ☐ Curb Stop
- ☐ Hydrant
- ☐ Valve
- ☐ Serv. Line
- ☐ Meter
- ☐ Serv. Connection
- ☐ Other
- ☑ Undefined

Action Taken/ Recommended
- ☐ Flushed Hydrant - Leak Stopped
- ☑ Flushed Hydrant - Still Leaking
- ☐ Repair / Replace
- ☑ Excavate & Repair
- ☐ Install additional access
- ☐ Resurvey following repairs
- ☐ Isolated to eliminate flow
- ☐ Verified with Multiple Set-ups

Correlation Data

Scan Time	Point Height Grade	Dist. From "RED" or "A"	Dist. From "Blue" or "B"

Equipment Used
- ☐ LD-15
- ☑ Probe Rod
- ☑ S-30
- ☐ Accucorr
- ☐ Tri-Corr 2001
- ☐ Helium Detector
- ☑ LD-12
- ☐ Line Locator
- ☑ LC-2500
- ☐ Visible

System Type
- ☐ Transmission System
- ☐ Irrigation System
- ☑ Distribution System
- ☐ Fire Suppression

PAGE#

Utility Services Associates LLC
You Leak, We Seek™

FIELD REPORT

Leak Report # 2

Map#:	7	Client:	C/O DAVENPORT	Date:	9-6-11
Location:	8TH AND ALLEY NORTH OF MORGAN			GPS:	
Remarks:	1953 LUDLOW HYDRANT IS LEAKING - VALVE IS QUIET				

Tech Initials:	B	Min. Spent	15	Marked?	Y (N)	EST. Water Loss	
		Classification	☐ Class I	☐ Class II	☑ Class III	GPM	.5
						Daily	

Leak Diagram

Note: Map is not to scale

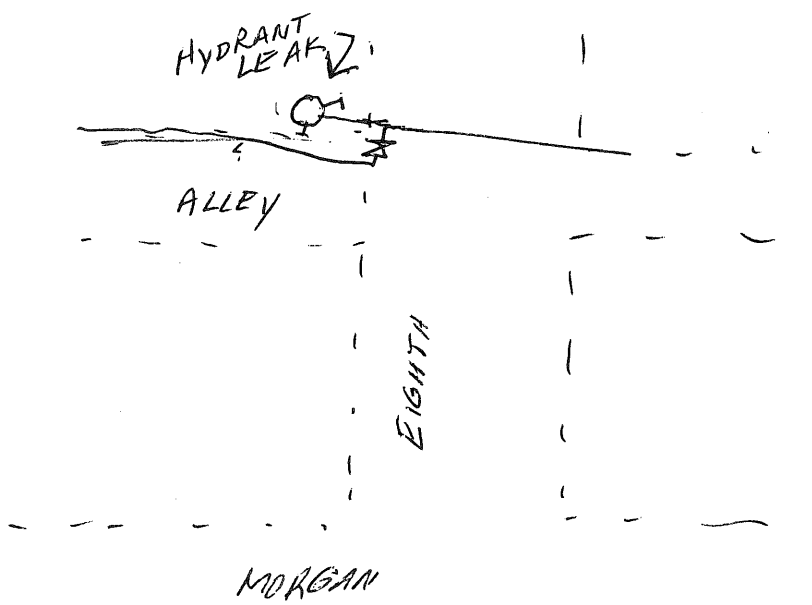

Cover Type
- ☐ Asphalt
- ☑ Gravel
- ☐ Concrete
- ☐ Soil

Leak Type
- ☐ Main
- ☑ Hydrant
- ☐ Serv. Line
- ☐ Serv. Connection
- ☐ Undefined
- ☐ Curb Stop
- ☐ Valve
- ☐ Meter
- ☐ Other

Action Taken/ Recommended
- ☐ Flushed Hydrant - Leak Stopped
- ☐ Flushed Hydrant - Still Leaking
- ☑ Repair / Replace
- ☐ Excavate & Repair
- ☐ Install additional access
- ☐ Resurvey following repairs
- ☐ Isolated to eliminate flow
- ☐ Verified with Multiple Set-ups

Correlation Data

Scan Time	Point Height Grade	Dist. From "RED" or "A"	Dist. From "Blue" or "B"

Equipment Used
- ☑ LD-15
- ☐ S-30
- ☐ Tri-Corr 2001
- ☐ LD-12
- ☐ LC-2500
- ☐ Probe Rod
- ☐ Accucorr
- ☐ Helium Detector
- ☐ Line Locator
- ☐ Visible

System Type
- ☐ Transmission System
- ☑ Distribution System
- ☐ Irrigation System
- ☐ Fire Suppression

PAGE#

Utility Services Associates LLC
You Leak, We Seek™

FIELD REPORT

Leak Report # 1

Map#:	9	Client:	C/O DAVENPORT	Date:	9-6-11
Location:	THIRD AT MORGAN			GPS:	
Remarks:	1956 LUDLOW HYDRANT IS LEAKING - VALVE IS QUIET				

Tech Initials:	JB	Min. Spent	15	Marked?	Y (N)	EST. Water Loss	
		Classification	☐ Class I	☐ Class II	☑ Class III	GPM	1.0
						Daily	

Leak Diagram

Note: Map is not to scale

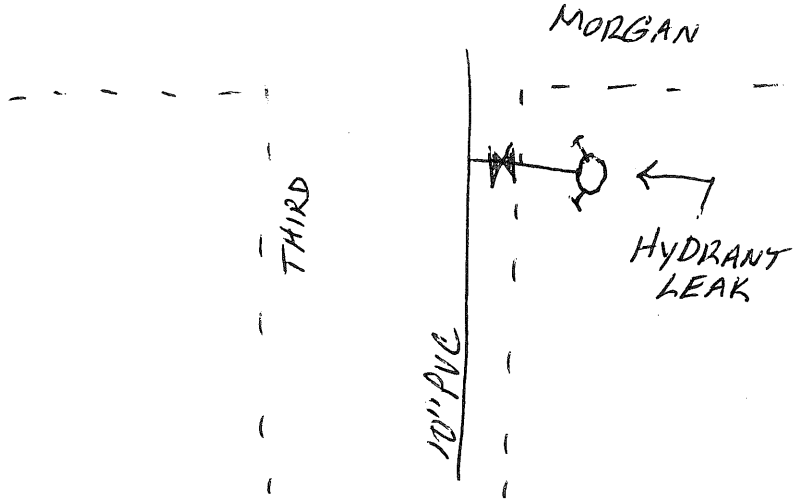

Cover Type
- ☐ Asphalt
- ☑ Gravel
- ☐ Concrete
- ☐ Soil

Leak Type
- ☐ Main
- ☑ Hydrant
- ☐ Serv. Line
- ☐ Serv. Connection
- ☐ Undefined
- ☐ Curb Stop
- ☐ Valve
- ☐ Meter
- ☐ Other

Action Taken/ Recommended
- ☐ Flushed Hydrant - Leak Stopped
- ☐ Flushed Hydrant - Still Leaking
- ☑ Repair / Replace
- ☐ Excavate & Repair
- ☐ Install additional access
- ☐ Resurvey following repairs
- ☐ Isolated to eliminate flow
- ☐ Verified with Multiple Set-ups

Correlation Data

Scan Time	Point Height Grade	Dist. From "RED" or "A"	Dist. From "Blue" or "B"
		PAGE#	

Equipment Used
- ☑ LD-15
- ☐ S-30
- ☐ Tri-Corr 2001
- ☐ LD-12
- ☐ LC-2500
- ☐ Probe Rod
- ☐ Accucorr
- ☐ Helium Detector
- ☐ Line Locator
- ☐ Visible

System Type
- ☐ Transmission System
- ☑ Distribution System
- ☐ Irrigation System
- ☐ Fire Suppression

Appendix I WATER RIGHTS DOCUMENTATION

City of Davenport
P. O. Box 26
Davenport, WA 99122

WASHINGTON STATE DEPARTMENT OF ECOLOGY

STATE OF WASHINGTON
SUPERSEDING CERTIFICATE OF WATER RIGHT

Document Title: Superseding Certificate of Water Right

Agency: Department of Ecology
Eastern Regional Office
4601 North Monroe
Spokane, WA 99205-1295

Applicant: City of Davenport
P. O. Box 26
Davenport, WA 99122

Reference Number:

THIS CERTIFICATE SUPERSEDES GROUND WATER CERTIFICATE NO. 788-D ISSUED NOVEMBER 4, 1948.

PRIORITY DATE	APPLICATION NUMBER	PERMIT NUMBER	CERTIFICATE NUMBER
1913			788-D

This is to certify that the herein named applicant has made proof to the satisfaction of the Department of Ecology of a right to the use of the public waters of the State of Washington as herein defined, and under and specifically subject to the provisions contained in the Permit issued by the Department of Ecology, and that said right to the use of said waters has been perfected in accordance with the laws of the State of Washington, and is hereby confirmed by the Department of Ecology and entered of record as shown, but is limited to an amount actually beneficially used.

PUBLIC WATERS TO BE APPROPRIATED

SOURCE	TRIBUTARY OF (IF SURFACE WATERS)
Two wells	---

MAX. CUBIC FEET PER SECOND	MAX. GALLONS PER MINUTE	MAX. ACRE-FEET PER YEAR
---	500	525

QUANTITY/TYPE OF USE/PERIOD OF USE
500 gallons per minute, 525 acre-feet per year, continuously, for municipal supply

LEGAL DESCRIPTION OF LOCATION OF DIVERSION/WITHDRAWAL

1/4 1/4	SECTION	TOWNSHIP N.	RANGE (E. OR W.) W.M.	W.R.I.A.	COUNTY
---	21	25	37 E.	53	Lincoln

PARCEL # 030 302 200 3000, 030 210 200 1500

ADDITIONAL LEGAL IS ON PAGE 2

LEGAL DESCRIPTION OF PROPERTY ON WHICH WATER IS TO BE USED

1/4 1/4	SECTION	TOWNSHIP N.	RANGE (E. OR W.) W.M.	W.R.I.A.	COUNTY
				53	Lincoln

PARCEL #

ADDITIONAL LEGAL IS ON PAGE 2

CONTINUED LEGAL DESCRIPTION FOR LOCATION OF DIVERSION/WITHDRAWAL

Well Locations:
6) NE¼SW¼ of Sec. 21, T. 25 N., R. 37 E.W.M.
7) NE¼NE¼ of Sec. 21, T. 25 N., R. 37 E.W.M.

CONTINUED LEGAL DESCRIPTION FOR PROPERTY ON WHICH WATER IS TO BE USED

Area served by the City of Davenport Municipal Supply System within Lincoln County, Washington. The place of use (POU) of this water right is the service area described in the most recent Water System Plan approved by the Washington State Department of Health, so long as the City of Davenport is and remains in compliance with the criteria in RCW 90.03.386(2). RCW 90.03.386 may have the effect of revising the place of use of this water right.

PROVISIONS

All conditions and requirements contained in reports of examination or permits previously issued apply to this superseding certificate unless specifically noted below.

This change authorizes two (2) points of withdrawal in the amounts of 500 gallons per minute; 525 acre-feet per year, continuously, each year, for municipal supply under Ground Water Certificate No. 788-D.

Existing water rights for the City of Davenport authorize a total withdrawal of 3130 gallons per minute and 2503 acre-feet per year, continuously, for municipal supply (Under Ground Water Certificate Nos. G3-21733, G3-00702, 3677-A, 385-A, 788-D).

If the criteria in RCW 90.03.386(2) are not met and a Water System Plan/Small Water System Management Program was approved after September 9, 2003, the place of use of this water right reverts to the service area described in that document. If the criteria in RCW 90.03.386(2) are not met and no Water System Plan/Small Water System Management Program has been approved after September 9, 2003, the place of use reverts to the last place of use described by Ecology in a water right authorization.

Prior to any new construction or alterations of a public water supply system, the State Board of Health rules require public water supply owners to obtain written approval from the Office of Drinking Water of the Washington State Department of Health. Please contact the Office of Drinking Water prior to beginning (or modifying) your project at Eastern Drinking Water Operations.

The definition and 'good standing' sections of the Municipal Water Use Efficiency Act of 2003 have been deemed unconstitutional by King County Superior Court. Ecology has appealed this decision to the Washington State Supreme Court. A final decision from the Supreme Court may not be issued for some time. The Supreme Court's decision may impact the status of the inchoate water currently held by the City of Davenport in its water right certificates. The status of the remaining quantity of inchoate ground water under these water rights is in question until the Supreme Court decisions are rendered.

Provisions continued on Page 3.

The right to use of the water aforesaid hereby confirmed is restricted to the lands or place of use herein described, except as provided in RCW 90.03.380, 90.03.390, and 90.44.100.

This superseding certificate of water right is specifically subject to relinquishment for non-use of water as provided in Chapter 90.14 RCW.

Given under my hand and the seal of this office at Spokane, Washington, this 14th day of October, 2009.

DEPARTMENT OF ECOLOGY STATE OF WASHINGTON

Jay J. Manning, Director
Department of Ecology

By _____
Keith L. Stoffel, Section Manager

DATA REVIEW
OK _____
ECY 040-1-2 (Rev. 8-97)

Provisions continued from Page 2

All wells constructed in the State shall meet the construction requirements of chapter 173-160 WAC entitled "Minimum Standards for the Construction and Maintenance of Wells" and chapter 18.104 RCW titled "Water Well Construction".

In accordance with chapter 173-160 WAC, wells shall not be located within certain minimum distances of potential sources of contamination. These minimum distances shall comply with local health regulations, as appropriate. In general, wells shall be located at least 100 feet from sources of contamination. Wells shall not be located within 1,000 feet of a solid waste landfill.

Use of water under this authorization shall be contingent upon the water right holder's maintenance of efficient water delivery systems and use of up-to-date water conservation practices consistent with established regulation requirements and facility capabilities.

Department of Ecology personnel, upon presentation of proper credentials, shall have access at reasonable times, to the project location, and to inspect at reasonable times wells or diversions and associated distribution systems for compliance with water law.

An approved measuring device shall be installed and maintained for each of the sources identified herein in accordance with the rule "Requirements for Measuring and Reporting Water Use," Chapter 173-173 WAC. Water use data shall be recorded weekly and maintained by the property owner, and shall be promptly submitted to Ecology upon request.

The rule above describes the requirements for data accuracy, device installation and operation, and information reporting. It also allows a water user to petition Ecology for modifications to some of the requirements. Installation, operation and maintenance requirements are enclosed as a document entitled "Water Measurement Device Installation and Operation Requirements".

Department of Ecology personnel, upon presentation of proper credentials, shall have access at reasonable times, to the records of water use that are kept to meet the above conditions, and to inspect at reasonable times any measuring device used to meet the above conditions.

Chapter 173-173 WAC describes the requirements for data accuracy, device installation and operation, and information reporting. It also allows a water user to petition Ecology for modifications to some of the requirements. Installation, operation and maintenance requirements are enclosed as a document entitled "Water Measurement Device Installation and Operation Requirements".
http://www.ecy.wa.gov/programs/wr/measuring/measuringhome.html

STATE OF WASHINGTON
DEPARTMENT OF ECOLOGY
4601 N Monroe Street • Spokane, Washington 99205-1295 • (509)329-3400

October 14, 2009

Lincoln County Auditor
PO Box 28
Davenport, WA 99122

Dear Sir or Madam:

Enclosed are Superseding Certificates of Water Right Nos. G3-00702, 385-A, 788-D, and 3677-A and a check in the amount of $256.00 to cover the cost of recording.

After recording, please forward the Superseding Certificates to:

City of Davenport
Mr. Steve Goemmel
P. O. Box 26
Davenport, WA 99122

Sincerely,

Karen Tusa

Karen Tusa
Processing Lead
Water Resources Program
Eastern Regional Office

KT:ka
Enclosures: Four Superseding Certificates of Water Rights
Check

cc: City of Davenport

City of Davenport
P. O. Box 26
Davenport, WA 99122

WASHINGTON STATE DEPARTMENT OF ECOLOGY

STATE OF WASHINGTON
SUPERSEDING CERTIFICATE OF WATER RIGHT

Document Title: Superseding Certificate of Water Right

Agency: Department of Ecology
Eastern Regional Office
4601 North Monroe
Spokane, WA 99205-1295

Applicant: City of Davenport
P. O. Box 26
Davenport, WA 99122

Reference Number:

THIS CERTIFICATE SUPERSEDES GROUND WATER
CERTIFICATE NO. 385-A ISSUED DECEMBER 8, 1949.

PRIORITY DATE	APPLICATION NUMBER	PERMIT NUMBER	CERTIFICATE NUMBER
October 14, 1947	650	737	385-A

This is to certify that the herein named applicant has made proof to the satisfaction of the Department of Ecology of a right to the use of the public waters of the State of Washington as herein defined, and under and specifically subject to the provisions contained in the Permit issued by the Department of Ecology, and that said right to the use of said waters has been perfected in accordance with the laws of the State of Washington, and is hereby confirmed by the Department of Ecology and entered of record as shown, but is limited to an amount actually beneficially used.

PUBLIC WATERS TO BE APPROPRIATED

SOURCE	TRIBUTARY OF (IF SURFACE WATERS)
Two wells	---

MAX. CUBIC FEET PER SECOND	MAX. GALLONS PER MINUTE	MAX. ACRE-FEET PER YEAR
---	350	425

QUANTITY/TYPE OF USE/PERIOD OF USE
350 gallons per minute, 425 acre-feet per year, continuously, for municipal supply

LEGAL DESCRIPTION OF LOCATION OF DIVERSION/WITHDRAWAL

1/4 1/4	SECTION	TOWNSHIP N.	RANGE (E. OR W.) W.M.	W.R.I.A.	COUNTY
---	21	25	37 E.	53	Lincoln

PARCEL # 030 302 200 3000, 030 210 200 1500

ADDITIONAL LEGAL IS ON PAGE 2

LEGAL DESCRIPTION OF PROPERTY ON WHICH WATER IS TO BE USED

1/4 1/4	SECTION	TOWNSHIP N.	RANGE (E. OR W.) W.M.	W.R.I.A.	COUNTY
				53	Lincoln

PARCEL #

ADDITIONAL LEGAL IS ON PAGE 2

CONTINUED LEGAL DESCRIPTION FOR LOCATION OF DIVERSION/WITHDRAWAL

Well Locations:
6) NE¼SW¼ of Sec. 21, T. 25 N., R. 37 E.W.M.
7) NE¼NE¼ of Sec. 21, T. 25 N., R. 37 E.W.M.

CONTINUED LEGAL DESCRIPTION FOR PROPERTY ON WHICH WATER IS TO BE USED

Area served by the City of Davenport Municipal Supply System within Lincoln County, Washington. The place of use (POU) of this water right is the service area described in the most recent Water System Plan approved by the Washington State Department of Health, so long as the City of Davenport is and remains in compliance with the criteria in RCW 90.03.386(2). RCW 90.03.386 may have the effect of revising the place of use of this water right.

PROVISIONS

All conditions and requirements contained in reports of examination or permits previously issued apply to this superseding certificate unless specifically noted below.

This change authorizes two (2) points of withdrawal in the amounts of 350 gallons per minute; 425 acre-feet per year, continuously, each year, for municipal supply under Ground Water Certificate No. 385-A.

Existing water rights for the City of Davenport authorize a total withdrawal of 3130 gallons per minute and 2503 acre-feet per year, continuously, for municipal supply (Under Ground Water Certificate Nos. G3-21733, G3-00702, 3677-A, 385-A, 788-D).

If the criteria in RCW 90.03.386(2) are not met and a Water System Plan/Small Water System Management Program was approved after September 9, 2003, the place of use of this water right reverts to the service area described in that document. If the criteria in RCW 90.03.386(2) are not met and no Water System Plan/Small Water System Management Program has been approved after September 9, 2003, the place of use reverts to the last place of use described by Ecology in a water right authorization.

Prior to any new construction or alterations of a public water supply system, the State Board of Health rules require public water supply owners to obtain written approval from the Office of Drinking Water of the Washington State Department of Health. Please contact the Office of Drinking Water prior to beginning (or modifying) your project at Eastern Drinking Water Operations.

The definition and 'good standing' sections of the Municipal Water Use Efficiency Act of 2003 have been deemed unconstitutional by King County Superior Court. Ecology has appealed this decision to the Washington State Supreme Court. A final decision from the Supreme Court may not be issued for some time. The Supreme Court's decision may impact the status of the inchoate water currently held by the City of Davenport in its water right certificates. The status of the remaining quantity of inchoate ground water under these water rights is in question until the Supreme Court decisions are rendered.

Provisions continued on Page 3.

The right to use of the water aforesaid hereby confirmed is restricted to the lands or place of use herein described, except as provided in RCW 90.03.380, 90.03.390, and 90.44.100.

This superseding certificate of water right is specifically subject to relinquishment for non-use of water as provided in Chapter 90.14 RCW.

Given under my hand and the seal of this office at Spokane, Washington, this 14th day of October, 2009.

DEPARTMENT OF ECOLOGY STATE OF WASHINGTON

Jay J. Manning, Director
Department of Ecology

By _____
Keith L. Stoffel, Section Manager

DATA REVIEW
OK _____
ECY 040-1-2 (Rev. 8-97)

Provisions continued from Page 2

All wells constructed in the State shall meet the construction requirements of chapter 173-160 WAC entitled "Minimum Standards for the Construction and Maintenance of Wells" and chapter 18.104 RCW titled "Water Well Construction".

In accordance with chapter 173-160 WAC, wells shall not be located within certain minimum distances of potential sources of contamination. These minimum distances shall comply with local health regulations, as appropriate. In general, wells shall be located at least 100 feet from sources of contamination. Wells shall not be located within 1,000 feet of a solid waste landfill.

Use of water under this authorization shall be contingent upon the water right holder's maintenance of efficient water delivery systems and use of up-to-date water conservation practices consistent with established regulation requirements and facility capabilities.

Department of Ecology personnel, upon presentation of proper credentials, shall have access at reasonable times, to the project location, and to inspect at reasonable times wells or diversions and associated distribution systems for compliance with water law.

An approved measuring device shall be installed and maintained for each of the sources identified herein in accordance with the rule "Requirements for Measuring and Reporting Water Use," Chapter 173-173 WAC. Water use data shall be recorded weekly and maintained by the property owner, and shall be promptly submitted to Ecology upon request.

The rule above describes the requirements for data accuracy, device installation and operation, and information reporting. It also allows a water user to petition Ecology for modifications to some of the requirements. Installation, operation and maintenance requirements are enclosed as a document entitled "Water Measurement Device Installation and Operation Requirements".

Department of Ecology personnel, upon presentation of proper credentials, shall have access at reasonable times, to the records of water use that are kept to meet the above conditions, and to inspect at reasonable times any measuring device used to meet the above conditions.

Chapter 173-173 WAC describes the requirements for data accuracy, device installation and operation, and information reporting. It also allows a water user to petition Ecology for modifications to some of the requirements. Installation, operation and maintenance requirements are enclosed as a document entitled "Water Measurement Device Installation and Operation Requirements".
http://www.ecy.wa.gov/programs/wr/measuring/measuringhome.html

STATE OF WASHINGTON
DEPARTMENT OF ECOLOGY
4601 N Monroe Street • Spokane, Washington 99205-1295 • (509)329-3400

October 14, 2009

Lincoln County Auditor
PO Box 28
Davenport, WA 99122

Dear Sir or Madam:

Enclosed are Superseding Certificates of Water Right Nos. G3-00702, 385-A, 788-D, and 3677-A and a check in the amount of $256.00 to cover the cost of recording.

After recording, please forward the Superseding Certificates to:

City of Davenport
Mr. Steve Goemmel
P. O. Box 26
Davenport, WA 99122

Sincerely,

Karen Tusa

Karen Tusa
Processing Lead
Water Resources Program
Eastern Regional Office

KT:ka
Enclosures: Four Superseding Certificates of Water Rights
Check

cc: City of Davenport

City of Davenport
P. O. Box 26
Davenport, WA 99122

WASHINGTON STATE DEPARTMENT OF ECOLOGY

STATE OF WASHINGTON
SUPERSEDING CERTIFICATE OF WATER RIGHT

Document Title: Superseding Certificate of Water Right

Agency: Department of Ecology
Eastern Regional Office
4601 North Monroe
Spokane, WA 99205-1295

Applicant: City of Davenport
P. O. Box 26
Davenport, WA 99122

Reference Number:

THIS CERTIFICATE SUPERSEDES GROUND WATER CERTIFICATE NO. 3677-A ISSUED AUGUST 4, 1960.

PRIORITY DATE	APPLICATION NUMBER	PERMIT NUMBER	CERTIFICATE NUMBER
September 18, 1957	4690	4408	3677-A

This is to certify that the herein named applicant has made proof to the satisfaction of the Department of Ecology of a right to the use of the public waters of the State of Washington as herein defined, and under and specifically subject to the provisions contained in the Permit issued by the Department of Ecology, and that said right to the use of said waters has been perfected in accordance with the laws of the State of Washington, and is hereby confirmed by the Department of Ecology and entered of record as shown, but is limited to an amount actually beneficially used.

PUBLIC WATERS TO BE APPROPRIATED

SOURCE	TRIBUTARY OF (IF SURFACE WATERS)
Two wells	---

MAX. CUBIC FEET PER SECOND	MAX. GALLONS PER MINUTE	MAX. ACRE-FEET PER YEAR
---	280	336 (non-additive)

QUANTITY/TYPE OF USE/PERIOD OF USE

280 gallons per minute, 336 acre-feet per year, continuously, for municipal supply

LEGAL DESCRIPTION OF LOCATION OF DIVERSION/WITHDRAWAL

1/4 1/4	SECTION	TOWNSHIP N.	RANGE (E. OR W.) W.M.	W.R.I.A.	COUNTY
---	21	25	37 E.	53	Lincoln

PARCEL # 030 302 200 3000, 030 210 200 1500

ADDITIONAL LEGAL IS ON PAGE 2

LEGAL DESCRIPTION OF PROPERTY ON WHICH WATER IS TO BE USED

1/4 1/4	SECTION	TOWNSHIP N.	RANGE (E. OR W.) W.M.	W.R.I.A.	COUNTY
				53	Lincoln

PARCEL #

ADDITIONAL LEGAL IS ON PAGE 2

CONTINUED LEGAL DESCRIPTION FOR LOCATION OF DIVERSION/WITHDRAWAL

Well Locations:
6) NE¼SW¼ of Sec. 21, T. 25 N., R. 37 E.W.M.
7) NE¼NE¼ of Sec. 21, T. 25 N., R. 37 E.W.M.

CONTINUED LEGAL DESCRIPTION FOR PROPERTY ON WHICH WATER IS TO BE USED

Area served by the City of Davenport Municipal Supply System within Lincoln County, Washington. The place of use (POU) of this water right is the service area described in the most recent Water System Plan approved by the Washington State Department of Health, so long as the City of Davenport is and remains in compliance with the criteria in RCW 90.03.386(2). RCW 90.03.386 may have the effect of revising the place of use of this water right.

PROVISIONS

All conditions and requirements contained in reports of examination or permits previously issued apply to this superseding certificate unless specifically noted below.

This change authorizes two (2) points of withdrawal in the amounts of 280 gallons per minute; 336 acre-feet per year, continuously, each year, for municipal supply under Ground Water Certificate No. 3677-A.

Existing water rights for the City of Davenport authorize a total withdrawal of 3130 gallons per minute and 2503 acre-feet per year, continuously, for municipal supply (Under Ground Water Certificate Nos. G3-21733, G3-00702, 3677-A, 385-A, 788-D).

If the criteria in RCW 90.03.386(2) are not met and a Water System Plan/Small Water System Management Program was approved after September 9, 2003, the place of use of this water right reverts to the service area described in that document. If the criteria in RCW 90.03.386(2) are not met and no Water System Plan/Small Water System Management Program has been approved after September 9, 2003, the place of use reverts to the last place of use described by Ecology in a water right authorization.

Prior to any new construction or alterations of a public water supply system, the State Board of Health rules require public water supply owners to obtain written approval from the Office of Drinking Water of the Washington State Department of Health. Please contact the Office of Drinking Water prior to beginning (or modifying) your project at Eastern Drinking Water Operations.

The definition and 'good standing' sections of the Municipal Water Use Efficiency Act of 2003 have been deemed unconstitutional by King County Superior Court. Ecology has appealed this decision to the Washington State Supreme Court. A final decision from the Supreme Court may not be issued for some time. The Supreme Court's decision may impact the status of the inchoate water currently held by the City of Davenport in its water right certificates. The status of the remaining quantity of inchoate ground water under these water rights is in question until the Supreme Court decisions are rendered.

Provisions continued on Page 3.

The right to use of the water aforesaid hereby confirmed is restricted to the lands or place of use herein described, except as provided in RCW 90.03.380, 90.03.390, and 90.44.100.

This superseding certificate of water right is specifically subject to relinquishment for non-use of water as provided in Chapter 90.14 RCW.

Given under my hand and the seal of this office at Spokane, Washington, this 14th day of October, 2009.

DEPARTMENT OF ECOLOGY STATE OF WASHINGTON

Jay J. Manning, Director
Department of Ecology

By _____
Keith L. Stoffel, Section Manager

DATA REVIEW
OK KY
ECY 040-1-2 (Rev. 8-97)

Provisions continued from Page 2

All wells constructed in the State shall meet the construction requirements of chapter 173-160 WAC entitled "Minimum Standards for the Construction and Maintenance of Wells" and chapter 18.104 RCW titled "Water Well Construction".

In accordance with chapter 173-160 WAC, wells shall not be located within certain minimum distances of potential sources of contamination. These minimum distances shall comply with local health regulations, as appropriate. In general, wells shall be located at least 100 feet from sources of contamination. Wells shall not be located within 1,000 feet of a solid waste landfill.

Use of water under this authorization shall be contingent upon the water right holder's maintenance of efficient water delivery systems and use of up-to-date water conservation practices consistent with established regulation requirements and facility capabilities.

Department of Ecology personnel, upon presentation of proper credentials, shall have access at reasonable times, to the project location, and to inspect at reasonable times wells or diversions and associated distribution systems for compliance with water law.

An approved measuring device shall be installed and maintained for each of the sources identified herein in accordance with the rule "Requirements for Measuring and Reporting Water Use," Chapter 173-173 WAC. Water use data shall be recorded weekly and maintained by the property owner, and shall be promptly submitted to Ecology upon request.

The rule above describes the requirements for data accuracy, device installation and operation, and information reporting. It also allows a water user to petition Ecology for modifications to some of the requirements. Installation, operation and maintenance requirements are enclosed as a document entitled "Water Measurement Device Installation and Operation Requirements".

Department of Ecology personnel, upon presentation of proper credentials, shall have access at reasonable times, to the records of water use that are kept to meet the above conditions, and to inspect at reasonable times any measuring device used to meet the above conditions.

Chapter 173-173 WAC describes the requirements for data accuracy, device installation and operation, and information reporting. It also allows a water user to petition Ecology for modifications to some of the requirements. Installation, operation and maintenance requirements are enclosed as a document entitled "Water Measurement Device Installation and Operation Requirements".
http://www.ecy.wa.gov/programs/wr/measuring/measuringhome.html

STATE OF WASHINGTON
DEPARTMENT OF ECOLOGY
4601 N Monroe Street • Spokane, Washington 99205-1295 • (509)329-3400

October 14, 2009

Lincoln County Auditor
PO Box 28
Davenport, WA 99122

Dear Sir or Madam:

Enclosed are Superseding Certificates of Water Right Nos. G3-00702, 385-A, 788-D, and 3677-A and a check in the amount of $256.00 to cover the cost of recording.

After recording, please forward the Superseding Certificates to:

City of Davenport
Mr. Steve Goemmel
P. O. Box 26
Davenport, WA 99122

Sincerely,

Karen Tusa

Karen Tusa
Processing Lead
Water Resources Program
Eastern Regional Office

KT:ka
Enclosures: Four Superseding Certificates of Water Rights
Check

cc: City of Davenport

S. P. No. 1341-5-60-531. 62500.

CERTIFICATE RECORD NO. 9 PAGE NO. 4317-A

STATE OF WASHINGTON, COUNTY OF Lincoln

Certificate of Ground Water Right

Issued in accordance with the provisions of Chapter 263, Laws of Washington for 1945, and amendments thereto, and the rules and regulations of the State Supervisor of Water Resources thereunder.

THIS IS TO CERTIFY *That* CITY OF DAVENPORT, WASHINGTON

has made proof to the satisfaction of the State Supervisor of Water Resources of Washington, of a right to the use of the ground waters of a well

located within (S½SE¼SW¼), Lot 6, Block 53, Mountain View Cemetery

Sec. 20, *Twp.* 25 *N., R.* 37 E. *W. M.,*

for the purpose of irrigation

under and subject to provisions contained in Ground Water Permit No. 5615 *issued by the State Supervisor of Water Resources and that said right to the use of said ground waters has been perfected in accordance with the laws of Washington, and is hereby confirmed by the State Supervisor of Water Resources of Washington and entered of record in Volume* 9 *at page* 4317-A; *that the right hereby confirmed dates from* April 5, 1961; *that the quantity of ground water under the right hereby confirmed for the purposes aforesaid, is limited to an amount actually beneficially used for said purposes, and shall not exceed* 120 gallons per minute; 48 acre-feet per year for the irrigation of 12 acres.

Special provisions required by the Supervisor of Water Resources:

A description of the lands to which such ground water right is appurtenant:

Beginning at a point 30 feet north of south quarter corner on the north and south center line of sec.20, T.25 N.,R.37 E.W.M., thence north 630 feet along the north and south center line of said sec.20, T.25 N., R.37 E.W.M., thence west 798.35 feet, thence south 630 feet, thence east 798.35 feet to the point of beginning.

The right to the use of the ground water aforesaid hereby confirmed is restricted to the lands or place of use herein described, except as provided in Sections 6 and 7, Chapter 122, Laws of 1929.

WITNESS the seal and signature of the State Supervisor of Water Resources affixed this 11th *day of* October, *19* 62.

M. J. Walter
State Supervisor of Water Resources.

ENGINEERING DATA

O.K.

City of Davenport
P. O. Box 26
Davenport, WA 99122

WASHINGTON STATE DEPARTMENT OF ECOLOGY

STATE OF WASHINGTON
SUPERSEDING CERTIFICATE OF WATER RIGHT

Document Title: Superseding Certificate of Water Right

Agency: Department of Ecology
Eastern Regional Office
4601 North Monroe
Spokane, WA 99205-1295

Applicant: City of Davenport
P. O. Box 26
Davenport, WA 99122

Reference Number:

THIS CERTIFICATE SUPERSEDES GROUND WATER
CERTIFICATE NO. G3-00702 ISSUED OCTOBER 31, 1973.

PRIORITY DATE	APPLICATION NUMBER	PERMIT NUMBER	CERTIFICATE NUMBER
July 24, 1970	G3-00702	G3-00702	G3-00702

This is to certify that the herein named applicant has made proof to the satisfaction of the Department of Ecology of a right to the use of the public waters of the State of Washington as herein defined, and under and specifically subject to the provisions contained in the Permit issued by the Department of Ecology, and that said right to the use of said waters has been perfected in accordance with the laws of the State of Washington, and is hereby confirmed by the Department of Ecology and entered of record as shown, but is limited to an amount actually beneficially used.

PUBLIC WATERS TO BE APPROPRIATED

SOURCE	TRIBUTARY OF (IF SURFACE WATERS)
Two wells	---

MAX. CUBIC FEET PER SECOND	MAX. GALLONS PER MINUTE	MAX. ACRE-FEET PER YEAR
---	450	396

QUANTITY/TYPE OF USE/PERIOD OF USE
450 gallons per minute, 396 acre-feet per year, continuously, for municipal supply

LEGAL DESCRIPTION OF LOCATION OF DIVERSION/WITHDRAWAL

1/4 1/4	SECTION	TOWNSHIP N.	RANGE (E. OR W.) W.M.	W.R.I.A.	COUNTY
---	21	25	37 E.	53	Lincoln

PARCEL # 030 302 200 3000, 030 210 200 1500

ADDITIONAL LEGAL IS ON PAGE 2

LEGAL DESCRIPTION OF PROPERTY ON WHICH WATER IS TO BE USED

1/4 1/4	SECTION	TOWNSHIP N.	RANGE (E. OR W.) W.M.	W.R.I.A.	COUNTY
				53	Lincoln

PARCEL #

ADDITIONAL LEGAL IS ON PAGE 2

CONTINUED LEGAL DESCRIPTION FOR LOCATION OF DIVERSION/WITHDRAWAL

Well Locations:
6) NE¼SW¼ of Sec. 21, T. 25 N., R. 37 E.W.M.
7) NE¼NE¼ of Sec. 21, T. 25 N., R. 37 E.W.M.

CONTINUED LEGAL DESCRIPTION FOR PROPERTY ON WHICH WATER IS TO BE USED

Area served by the City of Davenport Municipal Supply System within Lincoln County, Washington. The place of use (POU) of this water right is the service area described in the most recent Water System Plan approved by the Washington State Department of Health, so long as the City of Davenport is and remains in compliance with the criteria in RCW 90.03.386(2). RCW 90.03.386 may have the effect of revising the place of use of this water right.

PROVISIONS

All conditions and requirements contained in reports of examination or permits previously issued apply to this superseding certificate unless specifically noted below.

This change authorizes two (2) points of withdrawal in the amounts of 450 gallons per minute; 396 acre-feet per year, continuously, each year, for municipal supply under Ground Water Certificate No. G3-00702.

Existing water rights for the City of Davenport authorize a total withdrawal of 3130 gallons per minute and 2503 acre-feet per year, continuously, for municipal supply (Under Ground Water Certificate Nos. G3-21733, G3-00702, 3677-A, 385-A, 788-D).

If the criteria in RCW 90.03.386(2) are not met and a Water System Plan/Small Water System Management Program was approved after September 9, 2003, the place of use of this water right reverts to the service area described in that document. If the criteria in RCW 90.03.386(2) are not met and no Water System Plan/Small Water System Management Program has been approved after September 9, 2003, the place of use reverts to the last place of use described by Ecology in a water right authorization.

Prior to any new construction or alterations of a public water supply system, the State Board of Health rules require public water supply owners to obtain written approval from the Office of Drinking Water of the Washington State Department of Health. Please contact the Office of Drinking Water prior to beginning (or modifying) your project at Eastern Drinking Water Operations.

The definition and 'good standing' sections of the Municipal Water Use Efficiency Act of 2003 have been deemed unconstitutional by King County Superior Court. Ecology has appealed this decision to the Washington State Supreme Court. A final decision from the Supreme Court may not be issued for some time. The Supreme Court's decision may impact the status of the inchoate water currently held by the City of Davenport in its water right certificates. The status of the remaining quantity of inchoate ground water under these water rights is in question until the Supreme Court decisions are rendered.

Provisions continued on Page 3.

The right to use of the water aforesaid hereby confirmed is restricted to the lands or place of use herein described, except as provided in RCW 90.03.380, 90.03.390, and 90.44.100.

This superseding certificate of water right is specifically subject to relinquishment for non-use of water as provided in Chapter 90.14 RCW.

Given under my hand and the seal of this office at Spokane, Washington, this 14th day of October, 2009.

DEPARTMENT OF ECOLOGY STATE OF WASHINGTON

Jay J. Manning, Director
Department of Ecology

By _____
Keith L. Stoffel, Section Manager

DATA REVIEW
OK _____
ECY 040-1-2 (Rev. 8-97)

Provisions continued from Page 2.

All wells constructed in the State shall meet the construction requirements of chapter 173-160 WAC entitled "Minimum Standards for the Construction and Maintenance of Wells" and chapter 18.104 RCW titled "Water Well Construction".

In accordance with chapter 173-160 WAC, wells shall not be located within certain minimum distances of potential sources of contamination. These minimum distances shall comply with local health regulations, as appropriate. In general, wells shall be located at least 100 feet from sources of contamination. Wells shall not be located within 1,000 feet of a solid waste landfill.

Use of water under this authorization shall be contingent upon the water right holder's maintenance of efficient water delivery systems and use of up-to-date water conservation practices consistent with established regulation requirements and facility capabilities.

Department of Ecology personnel, upon presentation of proper credentials, shall have access at reasonable times, to the project location, and to inspect at reasonable times wells or diversions and associated distribution systems for compliance with water law.

An approved measuring device shall be installed and maintained for each of the sources identified herein in accordance with the rule "Requirements for Measuring and Reporting Water Use," Chapter 173-173 WAC. Water use data shall be recorded weekly and maintained by the property owner, and shall be promptly submitted to Ecology upon request.

The rule above describes the requirements for data accuracy, device installation and operation, and information reporting. It also allows a water user to petition Ecology for modifications to some of the requirements. Installation, operation and maintenance requirements are enclosed as a document entitled "Water Measurement Device Installation and Operation Requirements".

Department of Ecology personnel, upon presentation of proper credentials, shall have access at reasonable times, to the records of water use that are kept to meet the above conditions, and to inspect at reasonable times any measuring device used to meet the above conditions.

Chapter 173-173 WAC describes the requirements for data accuracy, device installation and operation, and information reporting. It also allows a water user to petition Ecology for modifications to some of the requirements. Installation, operation and maintenance requirements are enclosed as a document entitled "Water Measurement Device Installation and Operation Requirements".
http://www.ecy.wa.gov/programs/wr/measuring/measuringhome.html

STATE OF WASHINGTON
DEPARTMENT OF ECOLOGY
4601 N Monroe Street • Spokane, Washington 99205-1295 • (509)329-3400

October 14, 2009

Lincoln County Auditor
PO Box 28
Davenport, WA 99122

Dear Sir or Madam:

Enclosed are Superseding Certificates of Water Right Nos. G3-00702, 385-A, 788-D, and 3677-A and a check in the amount of $256.00 to cover the cost of recording.

After recording, please forward the Superseding Certificates to:

City of Davenport
Mr. Steve Goemmel
P. O. Box 26
Davenport, WA 99122

Sincerely,

Karen Tusa

Karen Tusa
Processing Lead
Water Resources Program
Eastern Regional Office

KT:ka
Enclosures: Four Superseding Certificates of Water Rights
Check

cc: City of Davenport

STATE OF WASHINGTON
DEPARTMENT OF ECOLOGY
4601 N Monroe Street • Spokane, Washington 99205-1295 • (509)329-3400

April 21, 2009

Lincoln County Auditor
450 Logan Street
Davenport, WA 99122

Dear Sir or Madam:

Enclosed is Superseding Certificate of Water Right No. G3-21733 and a check in the amount of $44.00 to cover the cost of recording.

After recording, please forward the Superseding Certificate to:

City of Davenport
P. O. Box 26
Davenport, WA 99122

Sincerely,

Karen Tusa

Karen Tusa
Processing Lead
Water Resources Program
Eastern Regional Office

KT:ka
Enclosures: Superseding Certificate of Water Right
Check

cc: City of Davenport

City of Davenport
P. O. Box 26
Davenport, WA 99122

WASHINGTON STATE DEPARTMENT OF ECOLOGY

STATE OF WASHINGTON
SUPERSEDING CERTIFICATE OF WATER RIGHT

Document Title: Superseding Certificate of Water Right

Agency: Department of Ecology
Eastern Regional Office
4601 North Monroe
Spokane, WA 99205-1295

Applicant: City of Davenport
P. O. Box 26
Davenport, WA 99122

Reference Number:

THIS CERTIFICATE SUPERSEDES GROUND WATER
CERTIFICATE NO. G3-21733 ISSUED SEPTEMBER 13, 1979.

PRIORITY DATE	APPLICATION NUMBER	PERMIT NUMBER	CERTIFICATE NUMBER
September 11, 1973	G3-21733	G3-21733P	G3-21733

This is to certify that the herein named applicant has made proof to the satisfaction of the Department of Ecology of a right to the use of the public waters of the State of Washington as herein defined, and under and specifically subject to the provisions contained in the Permit issued by the Department of Ecology, and that said right to the use of said waters has been perfected in accordance with the laws of the State of Washington, and is hereby confirmed by the Department of Ecology and entered of record as shown, but is limited to an amount actually beneficially used.

PUBLIC WATERS TO BE APPROPRIATED

SOURCE	TRIBUTARY OF (IF SURFACE WATERS)
Two wells	---

MAX. CUBIC FEET PER SECOND	MAX. GALLONS PER MINUTE	MAX. ACRE-FEET PER YEAR
---	1550	1157

QUANTITY/TYPE OF USE/PERIOD OF USE
1550 gallons per minute, 1157 acre-feet per year, for continuous municipal supply

LEGAL DESCRIPTION OF LOCATION OF DIVERSION/WITHDRAWAL

1/4 1/4	SECTION	TOWNSHIP N.	RANGE (E. OR W.) W.M.	W.R.I.A.	COUNTY
	21	25	37 E.	53	Lincoln

PARCEL # 0302 102 001500

ADDITIONAL LEGAL IS ON PAGE 2

LEGAL DESCRIPTION OF PROPERTY ON WHICH WATER IS TO BE USED

1/4 1/4	SECTION	TOWNSHIP N.	RANGE (E. OR W.) W.M.	W.R.I.A.	COUNTY
	21	25	37 E.	53	Lincoln

PARCEL #

ADDITIONAL LEGAL IS ON PAGE 2

CONTINUED LEGAL DESCRIPTION FOR LOCATION OF DIVERSION/WITHDRAWAL

#6) 1900 feet North and 1600 feet East from the SW corner of Sec. 21 within the NE¼SW¼ of Sec. 21; Lots 6 and 7, Block 22, Plat of Dillon's Addition; within the SW¼ of Sec. 21

#7) 1300 feet West and 300 feet South from the NE corner of Sec. 21, within the NE¼NE¼ of Sec. 21; Lots 4 and 5, Block 102, Columbia Addition to the City of Davenport; within the NE¼ of Sec. 21

CONTINUED LEGAL DESCRIPTION FOR PROPERTY ON WHICH WATER IS TO BE USED

Area served by the City of Davenport Municipal Supply System within Lincoln County, Washington. The place of use (POU) of this water is the service area described in the most recent Water System Plan approved by the Washington State Department of Health, so long as the City of Davenport is and remains in compliance with the criteria in RCW 90.03.386(2). RCW 90.03.386 may have the effect of revising the place of use of this water right.

PROVISIONS

All conditions and requirements contained in reports of examination or permits previously issued apply to this superseding certificate unless specifically noted below.

This authorization to make use of public waters of the State is subject to existing rights, including any existing rights held by the United States for the benefit of Indians under treaty or otherwise.

Nothing in this authorization shall be construed as satisfying other applicable federal, state, or local statutes, ordinances, or regulations.

All water wells constructed within the State shall meet the minimum standards for construction and maintenance as provided under RCW 18.104 (Washington Water Well Construction Act of 1971) and Chapter 173-160 WAC (Minimum Standards for Construction and Maintenance of Water Wells).

This well shall be cased and permanently sealed to a minimum depth of 445feet below land surface. Such sealing shall be performed in accordance with the provisions and standards of WAC Chapter 173-160-245 through Chapter 173-160-285 (Minimum Standards for Construction and Maintenance of Water Wells).

The installation of an access port, described in Ground Water Bulletin No. 1, is required. In addition, an airline and pressure gauge shall be installed and maintained in operating condition. The pressure gage shall be equipped with a standard tire valve and placed in an accessible location. The airline shall extend from land surface to the top of the pump bowls and the total airline length shall be reported to the Department of Ecology upon completion of the pump system.

Provisions continued on Page 3

The right to use of the water aforesaid hereby confirmed is restricted to the lands or place of use herein described, except as provided in RCW 90.03.380, 90.03.390, and 90.44.100.

This superseding certificate of water right is specifically subject to relinquishment for non-use of water as provided in Chapter 90.14 RCW.

Given under my hand and the seal of this office at Spokane, Washington, this 21st day of April, 2009.

DEPARTMENT OF ECOLOGY STATE OF WASHINGTON

Jay J. Manning, Director
Department of Ecology

By _____
Keith L. Stoffel, Section Manager

DATA REVIEW
OK KT
ECY 040-1-2 (Rev. 8-97)

Provisions continued from Page 2

If the criteria in RCW 90.03.386(2) are not met and a Water System Plan/Small Water System Management Program was approved after September 9, 2003, the place of use of this water right reverts to the service area described in that document. If the criteria in RCW 90.03.386(2) are not met and no Water System Plan/Small Water System Management Program has been approved after September 9, 2003, the place of use reverts to the last place of use described by Ecology in a water right authorization.

Prior to any new construction or alterations of a public water supply system, the State Board of Health rules require public water supply owners to obtain written approval from the Office of Drinking Water of the Washington State Department of Health. Please contact the Office of Drinking Water prior to beginning (or modifying) your project at Eastern Drinking Water Operations, 23403 E. Mission Avenue, Suite 114, Liberty Lake, WA 99201, (509) 456-3115.

The excessive water rights for both Qi and Qa might be of concern due to the June 11, 2008, King County Superior Court ruling that declared three sections of the 2003 Municipal Water Law unconstitutional. Ecology appealed this decision directly to the Washington State Supreme Court on July 7, 2008. A final decision on the appeal may not be forth coming for some time. The issues at stake that might have impact relating to City of Davenport Municipal Supply System include the validity of portions of the inchoate water rights.

FYI

STATE OF WASHINGTON
DEPARTMENT OF ECOLOGY
4601 N Monroe Street • Spokane, Washington 99205-1295 • (509)329-3400

May 1, 2013

Mr. Steve Goemmel
City of Davenport
P.O. Box 26
Davenport, Washington 99122-0026

Dear Mr. Goemmel:

Re: Davenport Water division, PWS ID # 18100N; Lincoln County
Comprehensive Water System Plan; DOH Project #13-0317

I have reviewed the above referenced document in accordance with the *2007 Memorandum of Understanding* between the Washington Department of Health (WDOH) and the Washington Department of Ecology (Ecology). Ecology's review is limited to the water right information contained within the report submitted by the City of Davenport Water System Plan.

The City of Davenport water system has six ground water rights: 788-D, 385-A, 3677-A, 4317-A, G3-00702C and G3-21733C, as indicated in Table 17 of the WSP report. In 2009, all water rights were consolidated/integrated through the approval of change ROEs (report of exam). The total authorized instantaneous withdrawal (Qi) is 3130 gpm, and total annual quantity (Qa) is 2503 acre-ft, and the source wells are #6 and #7.

The system has adequate water right quantity to support its current operation, and 6 year, and 20 year growth. These are my comments at this time. Please don't hesitate to contact me should you have any questions regarding this letter. I can be reached at (509) 329-3451 or by email at yifu461@ecy.wa.gov.

Sincerely,

Ying Fu
Water Resources Program
Eastern Regional Office

YF:md

cc: Heather Cannon, DOH
Victoria Leuba. DOE/ERO/WR

Appendix J COLUMBIA BASIN GWMA REPORT

City of Davenport, Washington

Groundwater Supply Review

November 2012

Prepared by the

Columbia Basin Ground Water Management Area,

GSI Water Solutions, Inc., and

S.S. Papadopoulos & Assoc., Inc.

For

The City of Davenport

And the

Office of Columbia River, Washington Department of Ecology

Columbia Basin Ground Water Management Area
Of Adams, Franklin, Grant and Lincoln Counties
170 N. Broadway,
Othello, WA 99344
509-488-3409
gwma@cbgwma.org

City of Davenport
Groundwater Supply Review

Introduction 3

Summary of Findings 3

Purpose 3

Water Demand and Sources 4

Groundwater Conditions 6

Aquifers 6

Water Levels 7

Groundwater Geochemistry 8

Supply Summary 10

Future Sources 10

Deep Grande Ronde Basalt Groundwater Source 10

Shallow Suprabasalt Sediment and Shallow Basalt Groundwater Source 11

Surface Water Source 11

Water Reuse 12

Introduction

Summary of Findings

The two primary water supply wells for the City of Davenport (#6 and #7) are pumping ancient groundwater. This ancient groundwater was predominantly recharged into the portion of the basalt aquifer system being pumped by these wells in the Pleistocene, over 12,000 years ago. In addition, reported static water level decline in the Grande Ronde portion of the basalt aquifer system in the vicinity of the City is indicative that pumping in the Grande Ronde exceeds the capability of the aquifer system to recharge water being pumped. GWMA modeling further suggests that under current pumping conditions it is possible that wells #6 and #7 may see significant water level declines in the next several decades to such a degree that the dynamic water levels will be too deep to sustain continued pumping at current pumping rates.

Comparing estimated water demand and growth predictions through the year 2060 to current well pumping capacity, the City of Davenport appears to have sufficient current pumping capacity to meet projected needs. However, this assumes the water production capacity of current or replacement wells stays at or near the reported current capacity. Based on observed historical water level declines and GWMA groundwater model predicted potential future water level declines GWMA urges the City be cautious about this conclusion. Accelerated or increased groundwater pumping in north-central Lincoln County, and the surrounding region, could accelerate future groundwater level changes and expose the City to groundwater supply shortfalls in the next several decades.

When these data, observations, and predictions are taken together - water level declines suggested by the existing data, predictions from the GWMA groundwater model, groundwater geochemical data suggesting little modern recharge - GWMA anticipates the very real potential for groundwater supply shortfalls during maximum periods of dynamic drawdown (pumping) in the next several decades. Based on that, GWMA recommends that the City begin an active real-time groundwater level monitoring and pumping program so that it can better track these potential conditions, adjust water system operation to possibly mitigate some of these predicted impacts, and potentially begin to explore water supply and source alternatives.

Purpose

The purpose of this report is to summarize basic information and issues associated with current groundwater supply conditions, including demand, supply, water levels, and sources for the City of Davenport. This summary for the City of Davenport, lying in northern Lincoln County, Washington (Figure 1) is based on GWMA data and information developed during previous projects, information collected from the public works and/or other municipal personal, data available from the Washington Department of Health (WDOH), and data and information published or compiled by others, including the Washington Department of Ecology (ECOLOGY). This report also looks at predictions about future groundwater conditions developed using GWMA's groundwater flow model for the Columbia River basalt aquifer system. Based on these summaries this report also includes a general review of some basic potential future water supply alternatives.

This report is not meant to be a comprehensive look at current and future groundwater supply conditions. It is meant to provide a general review of current and potential future conditions. This report does not look at water rights, or other legal issues that would need to be resolved to gain access to potential future alternative water supplies.

GWMA prepared this report for the City of Davenport under a funding authorization from the Washington Legislature directed through the Office of the Columbia River. Topics covered in this review include summaries of:

1. Water demand.
2. Water supplies sources, including aquifer identification.
3. Water levels in municipal supply wells.
4. Groundwater geochemistry and age.
5. Potential future water supply options.

In addition to the summary report, supporting materials are included in attached appendices. These appendices include:

1. Appendix A – Wells logs, geologic interpretations, and related hydrogeologic information for the municipalities wells.
2. Appendix B – Water level data, including hydrographs.
3. Appendix C – A discussion of how the GWMA groundwater model was used to predict future water level trends.
4. Appendix D – A discussion of how groundwater geochemical data was used to identify potential groundwater sources, and data specific to the municipality.

Water Demand and Sources

Average daily water demand for the City of Davenport is approximately 1.4 acre-feet/day (460,960 gallons/day; 320 gpm) based on reported annual volume of water produced (based on WDOH records for 2010). Daily peak demand for the City was estimated to be approximately 3.18 acre-feet (1,036,654 gallons/day; 720 gpm) based on information supplied by City staff. Table 1 summarizes basic population and water demand information for Davenport.

Based on WDOH and City records, the City of Davenport public water supply system utilizes two (2) water supply wells (***Wells #6 and #7***) as the primary water sources (Table 2). The City of Davenport alternates use between the two wells. In addition, the City owns a number of other wells that are either used for emergency purposes only (***Wells #1 and #2***) or are inactive (***Wells #3, #4, and #5***) (Table 2).

Reviewing reported water demand data and growth predictions through the year 2060 (Table 1) the City of Davenport has a predicted average daily demand and predicted peak demand of approximately 483 gpm and 993 gpm, respectively. Based on reported well pumping capacity (Table 2) the City appears to have sufficient current pumping capacity to meet projected needs. This of course assumes the water production capacity of current or replacement wells stays at or near the reported current capacity. Based on observed historical water level declines and GWMA groundwater model predicted potential future water level declines (described below) GWMA urges the City be cautious about this conclusion.

Accelerated or increased groundwater pumping in north-central Lincoln County, and the surrounding region, could accelerate future groundwater level changes and expose the City to groundwater supply shortfalls in the next several decades.

Table 1. Davenport Population and Water Demand Data.

POPULATION DATA			
	2010	2030	2060
Est. Population	1,734	1,909	2,217
Est. Population Growth, %	0.02 (2000-2010)	0.8	0.5
Population projection from City's Comprehensive Plan for medium forecast in the next 10 years is 1,816. Anticipated growth shown above will incorporate this information up to 2020 and utilize 0.5% thereafter.			
WATER DEMANDS			
	2010	2030	2060
Average Daily Demand (ADD), gpd	460,960	544,922	695,531
Max. Day Demand (MDD), gpd	1,036,654	1,225,477	1,430,385
Average Daily Demand, gpm	320	378	483
Max. Day Demand, gpm	720	851	993
Largest Water Users: stockyard (auction), school, fairgrounds, hospital, fertilizer providers, sports complex, and parks.			

Table 2. Well Source Operational Data.

SOURCES			
Name	Usage	Flow, gpm	Comments
Well No. 1 (SO1)	Inactive	-	
Well No.2 (SO2)	Inactive	200	
Wells No. 3, 4, 5	Inactive	450	Decommissioned
Well No. 6 (SO7)	Primary	1,600	Gross alpha and radium 228 at state reporting limit, nitrate as high as 2.8 mg/l
Well No. 7 (SO8)	Primary	1,050	Iron = 0.63 mg/l, above MCL 2010; trace nitrate at times
Total Primary Capacity		2,650	Well No. 6 & 7
Total Backup Capacity		200	Well No. 2
Observations on Source Water: water level decline observed in Well No. 7.			

Table 3. Well Identification and Construction.

Town well ID	*GWMA ID*	*ERO #*	*Date drilled*	*Date use ended*	*Total depth (feet)*	*Casing depth (feet)*	*Seal depth (feet)*
#1	L0458	444	1961	1995	360	63	
#2	L0462	443	1962	1995	495	60	
#3	L0461		1948	1993	722	16	
#4	L0454	456	1960	1990	302	235	
#5	L1920		1962	1990	501	60	
#6	L0465	460	1975	active	975	445	445
#7	L0463		1995	active	959	447	447

Groundwater Conditions

Aquifers

Given the layered nature of the Columbia River basalt aquifer system, the majority of the water produced from any water well comes from the bottoms and tops ***(also referred to as interflow zones)*** of the basalt unit(s) a well is open too. As a consequence, wells open to an interflow zone(s) in the same basalt unit will be pumping from the same body of groundwater. Conversely, wells that are not open to the same basalt unit interflow zone(s) will pump groundwater from bodies of groundwater having lesser degrees of hydrologic connection. Given these relationships knowing which basalt unit interflow zone(s) a set of wells is open too provides information useful in optimizing well use, groundwater pumping, water delivery, and identifying the portion of the aquifer system being pumped.

Basic hydrogeologic information about Davenport's wells (to the extent GWMA could ascertain them) is listed in Table 4. Additional information on geologic interpretations is provided Appendix A. Based on this information and reported well construction and depths (Table 3):

- ***Well #6*** is pumping groundwater from the Grande Ronde Basalt aquifer.
- ***Well No. 7*** is pumping groundwater from the Grande Ronde Basalt aquifer and it also apparently intersects pre-CRBG basement which produces little or no water.
- ***Wells #3, #4, and #5,*** which are now decommissioned, originally pumped water from both the Wanapum and Grande Ronde Basalts.

Table 4. Well Hydrogeology.

Town well ID	*GWMA ID*	*sed*	*SMB*	*Tpr,Tr*	*Tf*	*Tgsb*	*Deeper GRB*	*Test pumping rate (gpm)*	*DD (ft)*	*SC gpm/ft-DD*
#1	L0458							355	36	9.9
#2	L0462			x		x		750	204	3.7
#3	L0461			x		x				
#4	L0454			x				235	50	4.7
#5	L1920			x		x				
#6	L0465					x		2200	30	73.3
#7	L0463					x		1050	355	3

Explanation:
x – unit well is interpreted to be open too, as follows: ***Sed*** – suprabasalt sediment, ***SMB*** – Saddle Mountains Basalt, ***Tpr*** – Priest Rapids Member Wanapum Basalt, ***Tr*** – Roza Member Wanapum Basalt, ***Tf*** – Frenchman Springs Member Wanapum Basalt, ***Tgsb*** – Sentinel Bluffs Member Grande Ronde Basalt, ***Deeper GRB*** – Grande Ronde units deeper than the Tgsb.
Test pumping rate (gpm) – Reported pumping test pump rate in gallons per minute.
DD (ft) – Feet of water level drawdown in the well during the pumping test, equivalent to dynamic drawdown. Adding DD to the static depth to water gives the dynamic, or pumping, depth to water.
SC (gpm/ft-DD) – Specific capacity, which equals the gallons pumped during the test per foot of drawdown. The larger the number, the more productive a given well is.

Water Levels

Water level data, especially coupled with pumping data, provides information useful in determining well performance and aquifer conditions, including the presence or absence of hydrologic connection between different wells. When referring to water level data one should look at both ***static and dynamic (pumping)*** levels.

- Static water level refers to the water level in a well when it is not being pumped.
- Dynamic water level refers to the water level in a well when it is being pumped.

The difference between static and dynamic (pumping) water levels is referred to as ***drawdown***. Understanding drawdown is important in well use because when pumping (dynamic) results in drawdown that brings the dynamic water level to depths near the pump the well will lose the ability to produce water. This is commonly coupled with damage to the pump.

The remainder of this section summarizes what GWMA has learned about City well water levels. This section also summarizes some basic predictions about future water levels in City wells predicted by GWMA's groundwater model. Basic water level data for the City wells is summarized in Table 5. Table 5 also provides some predictions about future water levels in City wells. Additional water level data is provided in Appendix B while a discussion of how the GWMA groundwater model was used for this project is provided in Appendix C.

According to City staff static water levels are collected on a regular basis, and based on that data they have observed that Well #7 is experiencing static level declines. Further observations include the following:

- Based on City and ECOLOGY data static water level declines in the vicinity of the City range from approximately -1.0 to as much as -10 feet per year, while City wells have experienced decline rates of approximately -3.3 feet/year in ***Well #2*** and -1.0 foot/year in ***Well #6***.
- A notable exception is ***Well #1***, which has not experienced a static level decline. This may be because it is open to the Wanapum Basalt only, and data from wells around the City suggest that decline rates may be less in the Wanapum Basalt portion of the aquifer system than they are in the Grande Ronde Basalt portion of the aquifer system.

Given these data and predicted trends:

- GWMA expects static water levels in the area of the City to be as shallow as approximately 250 feet bgs to as much as approximately 700 feet bgs in 2060, in the portion of the aquifer system currently being pumped.

- Dynamic water levels during the maximum pumping season in the summer would be expected to be deeper, at approximately 330 to 740 feet bgs in 2060.

Of course, with future changes in pumping patterns and well conditions these water levels could change.

Table 5. Observed and Predicted Changes in Groundwater Level in Davenport Wells.

Town well ID	*GWMA ID*	*Initial DTW (ft)*	*Date*	*Most recent DTW (ft)*	*Date*	*Obs av static rate of change (ft/yr)*	*Projected rate of change (ft/yr)*	*Predicted approx. static DTW in 2060*	*Predicted approx. dynamic DTW in 2060*
#1	L0458	82	1961			0			
#2	L0462	89	1962	>200	1995	-3.3	-0.88	>257 to 415	>461 to619
#3	L0461								
#4	L0454								
#5	L1920								
#6	L0465	220	1975			-1	-5.77	305 to 710	335 to 740
#7	L0463	265	1995						

Explanation:
DTW – depth to water.
Date – year water level to left was measured.
Obs av static rate of change (ft/yr) – average water level decline rate, in feet per year, based on initial and most recent DTW.
Projected rate of change (ft/yr) – rate of water level decline, in feet per year, predicted by the GWMA groundwater model in the next 30 years.

Groundwater Geochemistry

Groundwater geochemical data can be useful in determining the recharge source, age of recharge, and mixing of different sources of water. Examples of how GWMA's groundwater geochemical data are used include the following:

- C-14 age and percent modern carbon (PMC) provides a measure of the average age of when groundwater samples entered the groundwater system as recharge, and an indication of the preponderance of older or younger waters in the sample.
- Stable isotopes of oxygen ($^{18}O/^{16}O$) and hydrogen (D/H) can be used to identify the presence of specific end members that may comprise mixed groundwater samples. End member isotopic signatures are consistent and therefore, if a mixed groundwater is known to contain certain end members, the contributory percentages of each end member can be back calculated for a given mixed groundwater sample. Basic isotopic signatures are:
    - For modern water delta D is greater than -140/ml, and delta ^{18}O are greater than -17/ml.
    - For ancient, or fossil, groundwater, delta D is less than -120/ml, and delta ^{18}O is less than -15/ml.
- TU is a measure of tritium, with those samples having TU over 0.5 generally having some modern component. Generally, the higher the TU the more abundant modern water is in the sample. TU less than 0.1 indicates essentially no modern water is present.
- Molar equivalent values (meq/l) provide additional information about the presence of modern water versus older water.
    - High meq/l values for sodium and potassium (Na+K) and silica dioxide (SiO_2), coupled with low values for sulfate (SO_4), calcium (Ca), and Magnesium (Mg) generally suggest very old groundwater.

- Opposite trends generally indicate younger to modern groundwater.

Using these different geochemical data sets GWMA evaluates the potential age of the source(s) of groundwater being pumped from sampled wells. Recharge ages of these groundwater sources include ancient (or fossil), modern, or geologically young but pre-modern. In addition, the evaluation looks at potential mixing of different aged sources, including which of the sources may dominate the sampled water. Generally, the ranges of ages identified in this evaluation include:

- Modern, this is groundwater that was recharged in approximately the last 60 to 65 years.
- Ancient, which is groundwater recharged during the Pleistocene, or early Holocene, essentially prior to approximately 10,000 years ago.
- Geologically young, or pre-modern, which is groundwater recharged prior to the 1940's, but could be hundreds to several thousand years old.
- Mixed, which includes mixes of different aged sources, both modern and ancient. Where GWMA interprets groundwater sources to be mixed, we attempt to identify which aged source predominates, if possible.

Additional information about the use of groundwater geochemistry in evaluating groundwater age and recharge source is provided in Appendix D. The data collected by GWMA for the City of Davenport is summarized below, and in Table 6.

Table 6. Basic Geochemical Data.

Town well ID	*GWMA ID*	*C-14 age (yrs)*	*PMC*	*TU*	*Delta D*	*Delta O18*	*Na+K (meq/l)*	*HCO3+CO3 (meq/l)*	*Ca (meq/l)*	*Mg (meq/l)*	*SO4 (meq/l)*	*SiO2 (meq/l)*
#1	**L0458**											
#2	**L0462**											
#3	**L0461**											
#4	**L0454**											
#5	**L1920**											
#6	**L0465**	19450	8.88	0.09	-143.3	-18.42	2.21	7.09	0.54	0.28	0.06	
#7	**L0463**	23070	5.66	0.12	-144.5	-18.63	1.6	6.56	0.85	0.43	0.14	1.27

Explanation:
C-14 age (years) – average age of groundwater bearing the carbon 14 isotope.
PMC – percent modern carbon
TU – tritium units calculated to be present in water.

The C-14, PMC, and TU in ***Wells #6 and #7*** are 15,000 and 23,000; 8.88 and 5.66; and 0.09 and 0.12, respectively. These data suggest both wells are pumping old water. The dates suggest primarily Pleistocene aged recharge of the portions of the basalt aquifer system being pumped by these two wells. Cation/anion values (Table 6), shown in elevated Na+K and SiO_2 values, and low Ca, Mg, and SO_4 values, also are indicative of old water with little or no modern influence or recharge. The isotopic data suggests younger groundwater is more abundant than the other parameters. Given the data

summarized above, well construction, and low nitrate-N concentrations, the isotopic data is interpreted to be incorrect.

The water quality data reported to the WADOH for both ***Wells #6 and #7*** indicate that they both have low fluoride levels (typically <1.0 mg/l) and low nitrate-N levels (typically less than 1.00 mg/l). The low nitrate values are a further indication of little modern influence on groundwater recharge to these wells.

Supply Summary

The two primary water supply wells for the City of Davenport (***Wells #6 and #7***) are pumping groundwater that entered the portion groundwater system being pumped in the Pleistocene. Reported static water level declines in the Grande Ronde portion of the aquifer system in the vicinity of the City is indicative that pumping exceeds the capability of the aquifer system to recharge water being pumped. GWMA modeling further suggests that under current pumping conditions that it is probable that wells #6 and #7 will see dynamic pumping levels in the next several decades that are too deep to sustain continued pumping at current pumping rates.

When these data, observations, and predictions are taken together - water level declines suggested by the existing data, predictions form the GWMA groundwater model, groundwater geochemical data suggesting little modern recharge - GWMA anticipates the very real potential for groundwater supply shortfalls during maximum periods of dynamic drawdown (pumping) in the next 10 to 20 years. Based on that, GWMA recommends that the City begin an active real-time groundwater level monitoring and pumping program so that it can better track these potential conditions, adjust water system operation to possibly mitigate some of these predicted impacts, and potentially begin to explore water supply and source alternatives.

Future Sources

The purpose of this section is to outline the potential for alternative water sources, including: (1) continued development of deep, primarily Grande Ronde Basalt hosted portions of the aquifer system, (2) development of a suprabasalt aquifer and/or shallow basalt groundwater source(s), (3) use of surface water, which might include ASR, and (4) water reuse.

Deep Grande Ronde Basalt Groundwater Source

With respect to the deeper groundwater source this summary looks at two primary issues. One is with drilling and operations. The other is related to the possibility of increased water treatment needs commonly associated with deeper groundwater sources.

In the vicinity of the City the top of the Grande Ronde Basalt is relatively shallow, lying at depths of a few hundred feet below ground surface. The two primary City production wells are interpreted to intersect this unit. Deeper Grande Ronde units may be present beneath the City, and these units may indeed produce groundwater. Given this though, the following basic constraints should be considered when looking to drill a deeper well:

- Drilling deeper does run the risk of hitting the deep granitic rock underlying the basalt. These granites have been intersected by wells in the vicinity of the City, and these rocks typically do not have significant groundwater yields. They would not be viable groundwater producers for the City.
- If additional deep Grande Ronde wells could be successfully drilled and constructed, GWMA does not know what the recharge rates to these deeper units are, and whether or not a sustainable pumping level could be found that gives the City sufficient water for its needs. Given indications of relatively old water in Wells #6 and #7, GWMA speculates that while some recharge is present, pumping in excess of recharge is quite possible in the deep Grande Ronde system.

As is the case in most deep basalt wells in the GWMA, an additional concern is decreasing natural water quality at greater depths typically due to increasing levels of fluoride, iron, manganese, and hydrogen sulfide. As the concentrations of these constituents reach certain thresholds, this will necessitate installation of treatment systems to meet regulatory requirements and aesthetic guidance. While GWMA does not currently think these would be a major issue in the vicinity of the City, one should be aware of their potential occurrence and have contingency plan in place to deal with them in the event a deeper well is drilled.

Shallow Suprabasalt Sediment and Shallow Basalt Groundwater Source

Given the City's daily and total water demands, a water supply system solely reliant on the suprabasalt sediment aquifer system and immediately underlying shallow basalt groundwater system is possible, especially given the presence of reasonably productive irrigation wells in the vicinity. However, there are constraints on such a system as follows:

- If sufficient shallow groundwater could be found near the City, a new well system tapping into it likely would need several wells tied together via pipelines and associated interties. This shallow system may also see interference from irrigation wells in the area, as has been reported to GWMA already occurs.
- Productive nearby irrigation wells offer an alternative to the City, if these wells could be purchased from willing land owners and either connected to the City water system, or taken offline to reduce interference with new or existing shallow city wells.

As with all shallow groundwater pumping in GWMA, care should be taken in understanding groundwater quality, and potential treatment needs associated with nutrient loading, which include nitrate-N. In some case the treatment requirements associated with using shallow groundwater outweigh the benefits of using such water.

Surface Water Source

The nearest extensive body of natural surface water is the Lake Roosevelt pool. This potential source is many miles away, and the viability of accessing it is not explored further in this review. Without a surface source ASR does not appear to be a viable alternative either.

Water Reuse

Water reuse, e.g., utilization of treated waste water for irrigation or similar needs, to reduce demand on potable aquifer sources is a possibility. However, given the small size of the city and lack of large industrial waste water sources, the resulting waste water stream would be small. Given this it is unlikely that developing a waste water reuse system would be economically viable.

Figure 1. Map of Davenport and surrounding area, showing location of wells and major geologic structures (to the extent they are known).

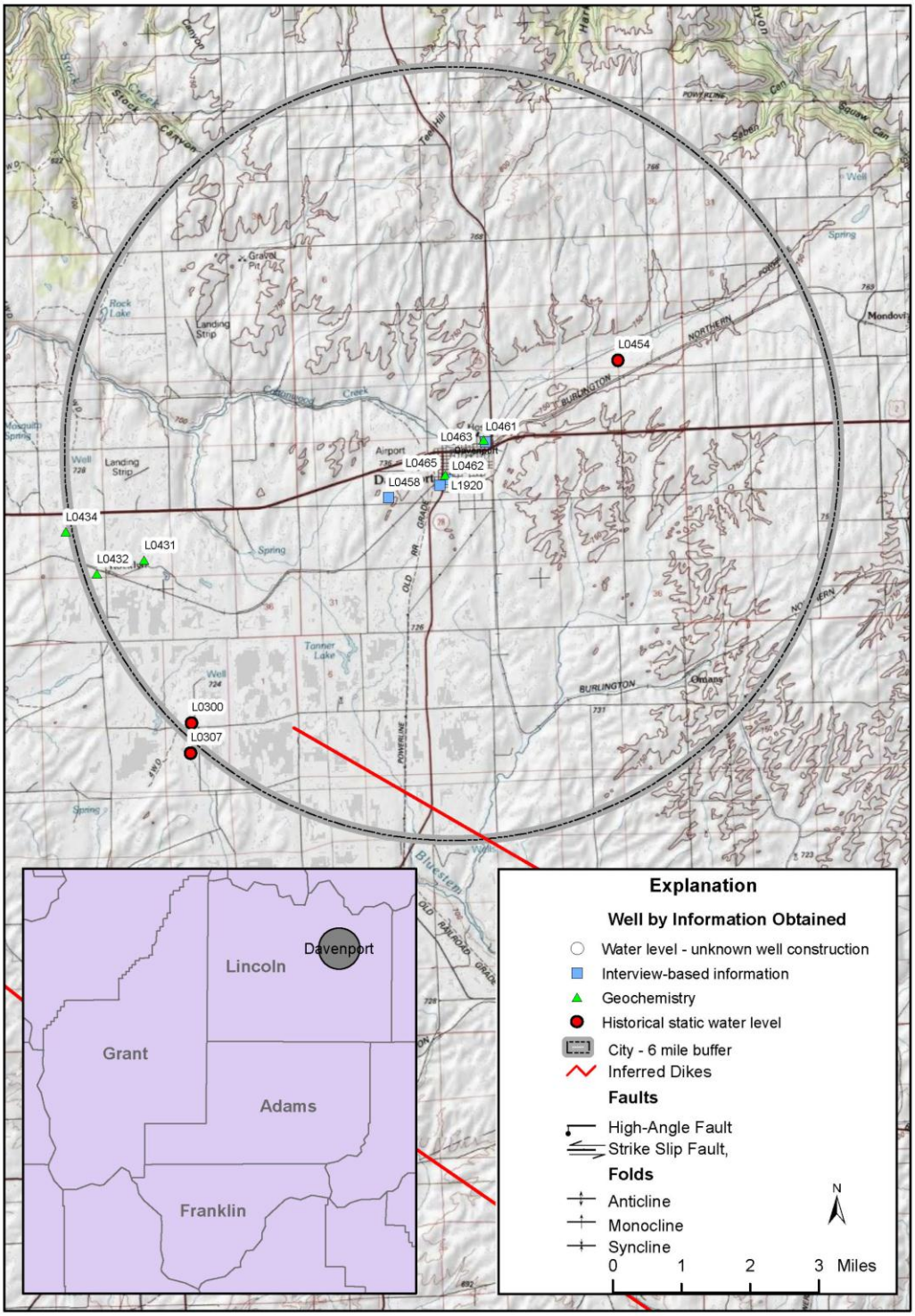

Appendix A

Davenport

Well Logs, Geologic Interpretations, and Related Hydrogeologic Information

WELL DATA SHEET

ERO 444

Well No.: L0458 WADOE No.: Date Drilled:

Method: Use:

Location: T25 R37 S20 Surface Elevation: est. / known

TOB(ftbgs): TD(ftbgs):

UNIT	TOP OF UNIT		Thick.	COMMENTS
	Depth bgs	Elev.		

WATER DATA

SWL/Date: Temp.: Well Test:

Water Bearing Zones (ft. bgs):

CONSTRUCTION DATA

Casing: Open Interval(s):

Liner:

Seals:

Screens:

Perforations:

L-0458

411803E 5277401N

ER0444

STATE OF WASHINGTO.
DEPARTMENT OF CONSERVATION
AND DEVELOPMENT

WELL LOG No. A-5893 C-4317

Date 11-5, 19 62

Record by

Source

Location: State of WASHINGTON Well #2

County Lincoln

Area

Map

¼ ¼ sec 20 T. 25 N., R. 37 E.

Diagram of Section

Drilling Co. Jasper N. Jones well drilling

Address Davenport, Washington

Method of Drilling Date 1-6-, 19 61

Owner City of Davenport

Address Davenport, Washington

Land surface, datum ft. above/below

Consolidation	Material	Thickness (feet)	Depth (feet)
	Clay	0	63
	Basalt, broken (water at 85)	63	118
	Basalt, very hard	118	142
	Basalt, broken	142	192
	Basalt, hard, gray, caving	192	205
	Basalt, hard, gray, (crevice 254)	205	270
	Basalt, very hard (crevice)	270	291
	Basalt, hard, caving	291	305
	Basalt, hard	305	312
	Basalt, broken and porous	312	360
	Big water	348	360
	Depth drilled 360 ft - Diam of well 10 inches -		
	Depth of completed well 360 ft.		
	Irrigation well		
	Casing: 10 in. diam from 0 to 63 ft		

(Transcribe driller's terminology literally but paraphrase as necessary, in parentheses. If material water-bearing, so state and record static level if reported. Give depths in feet below land-surface datum unless otherwise indicated. Correlate with stratigraphic column, if feasible. Following log of materials, list all casings, perforations, screens, etc.)

Turn up (over) Sheet of sheets

NP

The Department of Ecology does NOT Warranty the Data and/or the Information on this Well Report.

The Department of Ecology does NOT Warranty the Data and/or the Information on this Well Report.

WELL LOG.—Continued No. ...../.....-.....

Correlation	Material	Thickness (feet)	Depth (feet)
	Depth forward	———	
	Water levels: static level 82 ft (1-6-61)		
	Well Tests:		
	Yield 180 gpm with 12 ft drawdown after 3 hrs		
	Yield 355 gpm with 36 ft drawdown after 3 hrs		
	Pump: (set at 342 ft)		

S. F. No. 7449—OS—6-61—2M.

ER0444

STATE OF WASHINGTO.
DEPARTMENT OF CONSERVATION
AND DEVELOPMENT

WELL LOG No. A-5893 C-4317

Date 11-5, 19 62

Record by

Source

Location: State of WASHINGTON Well #2

County Lincoln

Area

Map

¼ ¼ sec. 20 T. 25 N., R. 37 E.

Diagram of Section

Drilling Co. Jasper N. Jones well drilling

Address Davenport, Washington

Method of Drilling Date 1-6-, 19 61

Owner City of Davenport

Address Davenport, Washington

Land surface, datum ft. above / below

Correlation	Material	Thickness (feet)	Depth (feet)
	Clay	0	63
	Basalt, broken (water at 85)	63	118
	Basalt, very hard	118	142
	Basalt, broken	142	192
	Basalt, hard, gray, caving	192	205
	Basalt, hard, gray, (crevice 254)	205	270
	Basalt, very hard (crevice)	270	291
	Basalt, hard, caving	291	305
	Basalt, hard	305	312
	Basalt, broken and porous	312	360
	Big water	348	360
	Depth drilled 360 ft - Diam of well 10 inches -		
	Depth of completed well 360 ft.		
	Irrigation well		
	Casing: 10 in. diam from 0 to 63 ft.		

(Transcribe driller's terminology literally but paraphrase as necessary, in parentheses. If material water-bearing, so state and record static level if reported. Give depths in feet below land-surface datum unless otherwise indicated. Correlate with stratigraphic column, if feasible. Following log of materials, list all casings, perforations, screens, etc.)

Turn up (over) Sheet ... of ... sheets

25/37-20

L0458

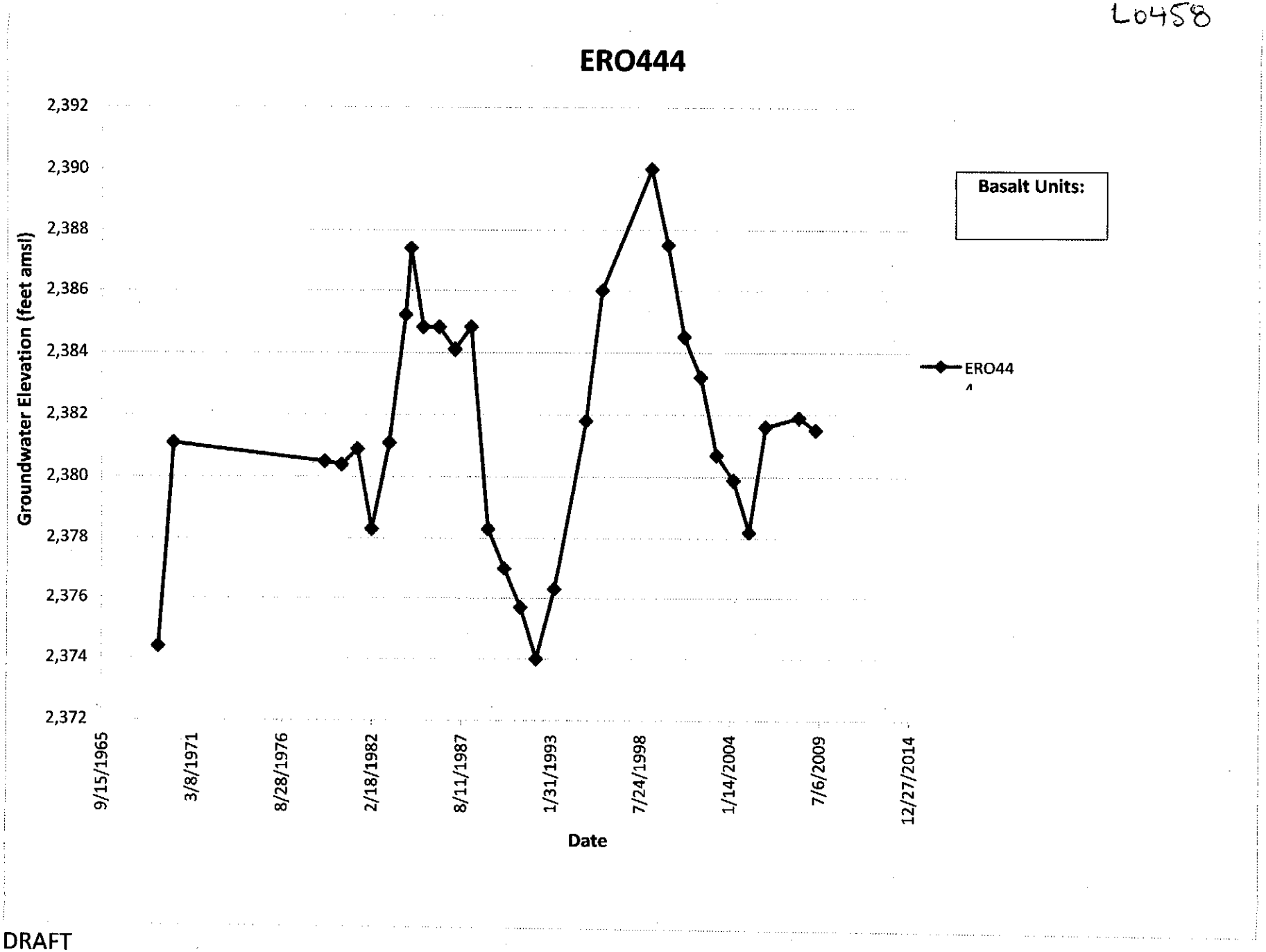

DRAFT

VERSION: 01/26/2010

WELL DATA SHEET

ERO 443

Well No.: L0462 WADOE No.: Date Drilled:

Method: Use:

Location: T25 R37 S21 Surface Elevation: est. / known

TOB(ftbgs): TD(ftbgs):

UNIT	TOP OF UNIT Depth bgs	TOP OF UNIT Elev.	Thick.	COMMENTS

WATER DATA

SWL/Date: Temp.: Well Test:

Water Bearing Zones (ft. bgs):

CONSTRUCTION DATA

Casing: Open Interval(s):

Liner:

Seals:

Screens:

Perforations:

L-0462

413292E 5277775N

ER0443

STATE OF WASHINGTON
DEPARTMENT OF CONSERVATION AND DEVELOPMENT

WELL LOG

No. Unrecorded

Date 11-1, 1962

Record by

Source City Clerk

Location: State of WASHINGTON

County Lincoln

Area

Map

¼ ¼ sec 21 T. 25 N., R. 37 E. W.

Diagram of Section

Drilling Co. Jasper Jones

Address Davenport

Method of Drilling Cable Date 4-7-, 1962

Owner City of Davenport #5

Address Davenport, Washington

Land surface, datum ft. above below

Consolidation	Material	Thickness (feet)	Depth (feet)
	(Transcribe driller's terminology literally but paraphrase as necessary, in parentheses. If material water-bearing, so state and record static level if reported. Give depths in feet below land-surface datum unless otherwise indicated. Correlate with stratigraphic column, if feasible. Following log of materials, list all casings, perforations, screens, etc.)		
	Soil and gravel	0	6
	Basalt, broken, brown	6	50
	Basalt, hard, gray	50	75
	Basalt, black	72	90
	Basalt, brown, hard	90	108
	Basalt, gray, very hard	108	131
	Basalt, gray, hard	131	143
	Basalt, broken into cubes, water	143	148
	Basalt, broken and shells	148	163
	Basalt, black	163	174
	Basalt, gray, very hard	174	198
	Basalt, gray very hard	198	219
	Basalt, gray to black (crevice)	215	230
	Basalt, black	219	230
	Basalt, black, very dense	230	245
	Basalt, gray layers and hard		

Turn up (over) Sheet of sheets

NP

The Department of Ecology does NOT Warranty the Data and/or the Information on this Well Report.

The Department of Ecology does NOT Warranty the Data and/or the Information on this Well Report.

WELL LOG.—Continued No...../.....-.....

Color-Layers	Material	Thickness (feet)	Depth (feet)
	Depth forward	———	
	layers (crevice at 245)	245	255
	Basalt, light colored	255	260
	Basalt, light gray, very hard	260	275
	Basalt, broken, some green clay		
	Some water at 284	275	284
	Basalt, broken, shells	284	315
	Water at 312		
	Basalt, broken, shells, caving	315	340
	Basalt with shells	340	365
	Basalt, hard, black, with soft	365	374
	Clay broken basalt, water lowered		
	in hole	374	380
	Basalt, black, hard	380	395
	Basalt, hard, gray (caving)	395	410
	Basalt, hard, gray	410	420
	Basalt, broken, shells, water		
	at 445	420	455
	Basalt, gray	455	482
	Basalt, broken, black, shells	482	490
	Basalt, gray	490	495
	Bailed and measured at 501 ft.		
	Casing: 12 in diam from 0 to 60 ft		
	Construction: surface - two yds concrete		
	Water levels: SWL 89 ft (4-4-62)		
	Well tests: Dickerson Mach. Yield 750 gpm with		
	204 ft drawdown after 5 hrs.		
	Recovery 61 ft in 21 min.		
	Proposed use: irrigation		

S. F. No. 7449—OS—4-61—2M.

ER0443

STATE OF WASHINGTON
DEPARTMENT OF CONSERVATION
AND DEVELOPMENT

WELL LOG

No. Unrecorded

Date 11-8, 1962

Record by

Source City Clerk

Location: State of WASHINGTON

County Lincoln

Area

Map

¼ ¼ sec 21 T. 25 N., R. 37 E. W.

Diagram of Section

Drilling Co. Jasper Jones

Address Davenport

Method of Drilling Cable Date 4-7-, 1962

Owner City of Davenport #5

Address Davenport, Washington

Land surface, datum ft. above below

Correlation	Material	Thickness (feet)	Depth (feet)
	(Transcribe driller's terminology literally but paraphrase as necessary, in parentheses. If material water-bearing, so state and record static level if reported. Give depths in feet below land-surface datum unless otherwise indicated. Correlate with stratigraphic column, if feasible. Following log of materials, list all casings, perforations, screens, etc.)		
	Soil and gravel	0	6
	Basalt, broken, brown	6	50
	Basalt, hard, gray	50	75
	Basalt, black	72	90
	Basalt, brown, hard	90	108
	Basalt, gray, very hard	108	131
	Basalt, gray, hard	131	143
	Basalt, broken into cubes, water	143	148
	Basalt, broken and shells	148	163
	Basalt, black	163	174
	Basalt, gray, very hard	174	198
	Basalt, gray very hard	198	219
	Basalt, gray to black (crevice)	215	230
	Basalt, black	219	230
	Basalt, black, very dense	230	245
	Basalt, gray layers and hard		

Turn up (over)

Sheet of sheets

25/37-21

L0462

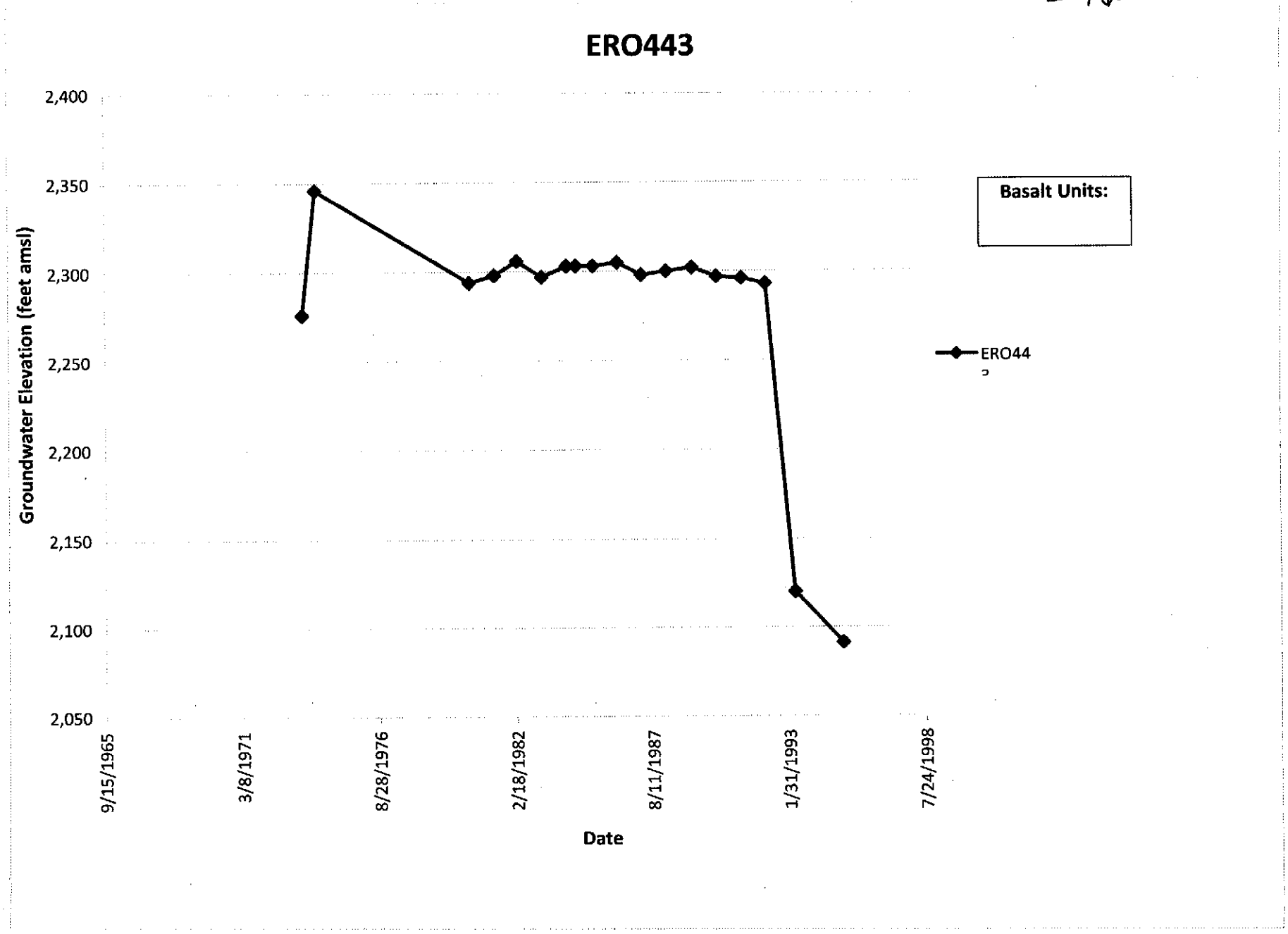

DRAFT
VERSION: 01/26/2010

Davenport

WELL DATA SHEET

Well No.: L04(e) WADOE No.: Date Drilled:

Method: Use:

Location: T25 R37 S21 Surface Elevation: est. / known

TOB(ftbgs): TD(ftbgs):

UNIT	TOP OF UNIT		Thick.	COMMENTS
	Depth bgs	Elev.		

WATER DATA

SWL/Date: Temp.: Well Test:

Water Bearing Zones (ft. bgs):

CONSTRUCTION DATA

Casing: Open Interval(s):

Liner:

Seals:

Screens:

Perforations:

The Department of Ecology does NOT Warranty the Data and/or the Information on this Well Report.

F. L-0461

414279E 5278684N

STATE OF WASHINGTON
DEPARTMENT OF CONSERVATION
AND DEVELOPMENT

WELL LOG

No. Appli. #650
Cert. #385A

Date August, 19 48

Record by Oliver F. Zinkgrof

Source Driller record

Location: State of WASHINGTON

County Lincoln

Area

Map

NE¼ NE¼ sec. 21 T. 25 N., R. 32 E.

DIAGRAM OF SECTION

Drilling Co. Oliver F. Zinkgrof

Address E. 1606 Sharp Ave., Spokane 15, W.

Method of Drilling Date 19

Owner City of Davenport; Washington

Address

Land surface, datum ft. above / below

Consolidation	Material	Thickness (feet)	Depth (feet)
	(Transcribe driller's terminology literally but paraphrase as necessary, in parentheses. If material water-bearing, so state and record static level if reported. Give depths in feet below land-surface datum unless otherwise indicated. Correlate with stratigraphic column, if feasible. Following log of materials, list all casings, perforations, screens, etc.)		
	Black, broken basalt	123	123
	Grey and black basalt	133	256
	Green clay with thin layers basalt	34	290
	Black basalt	4	294
	Green shale	2	296
	Black basalt	72	368
	Crevice	1	369
	Grey and black basalt	243	612
	Blue and black basalt	68	680
	Blue and grey basalt	42	722
	Note: Static water depth about 50' to depth of hole 580'. At 692' static water 70', at 710' static water 90'. (over)		

Tpv
Tev
Tgsb

Turn up

NP

Sheet of sheets

Sur Elev. 2422
Tgsb ~290' bss
Elev. 2130

Disclaimer: This Well Log is 'As Is' with NO Warranty of Any Kind. Well Log

The Department of Ecology does NOT Warranty the Data and/or the Information on this Well Report.

WELL LOG.—Continued No._____/_____-_____

Correlation	Material	Thickness (feet)	Depth (feet)
	Depth forward	—	
	Pump test:		
	Dim: 722' x 16"		
	SWL: not known		
	D.D. " "		
	Yield: 350 g.p.m.		
	Casing: 16" dia. from 0 to 15'-8"		
	Perforations: none		

WELL DATA SHEET

ERO 456

Well No.: L0454 WADOE No.: Date Drilled:

Method: Use:

Location: T25 R37 S16 Surface Elevation: est. / known

TOB(ftbgs): TD(ftbgs):

UNIT	TOP OF UNIT Depth bgs	Elev.	Thick.	COMMENTS

WATER DATA

SWL/Date: Temp.: Well Test:

Water Bearing Zones (ft. bgs):

CONSTRUCTION DATA

Casing: Open Interval(s):

Liner:

Seals:

Screens:

Perforations:

L-0454

414231E 5279108N

ER0456

STATE OF WASHINGTON
DEPARTMENT OF CONSERVATION
AND DEVELOPMENT

WELL LOG

No. Appl. #4690
Cert. 3677-A

Date 8-17, 1960

Record by well driller

Source driller's record

Location: State of WASHINGTON

County Lincoln

Area

Map

SE ¼ SE ¼ sec. 16 T 25 N., R. 37 E.

Diagram of Section

Drilling Co. Jasper Jones

Address Davenport, Wash.

Method of Drilling Date 19

Owner City of Davenport, Wash.

Address

Land surface, datum ft. above / below

Consolidation	Material	Thickness (feet)	Depth (feet)
	(Transcribe driller's terminology literally but paraphrase as necessary, in parentheses. If material water-bearing, so state and record static level if reported. Give depths in feet below land-surface datum unless otherwise indicated. Correlate with stratigraphic column, if feasible. Following log of materials, list all casings, perforations, screens, etc.)		
	Top soil	4	4
	Broken basalt- some dirt	22	26
	Basalt shells- water	7	33
	Broken basalt - some clay	19	52
	" " some clay & gravel	3	55
	Broken basalt- blue	12	67
	Broken shells- some broken basalt & clay hole caving	16	83
	Broken basalt-some clay	3	86
	Basalt shells-hard blue	11	97
	Gray basalt hard	8	105
	" " "	3	108
	Broken basalt some clay	8	116
	Clay & shale blue	9	125
	" " " "	5	130
	Gravel & broken basalt	23	153
	Broken basalt & shale	34	187
	" " " "	7	194

Turn up (over) Sheet of sheets

NP

The Department of Ecology does NOT Warranty the Data and/or the Information on this Well Report.

The Department of Ecology does NOT Warranty the Data and/or the Information on this Well Report.

WELL LOG.—Continued No. ...../.....

Origin-Latitude	Material	Thickness (feet)	Depth (feet)
	Depth forward	——	194
	Basalt shells		
	Broken basalt	9	203
	" " some shells	8	211
	hard & blue		
	Gray basalt - hard	11	222
	Blue basalt - hard	10	232
	Clay, blue sticky	3	235
	" " & wood	7	242
	Clay blue & green- some (rotten wood) gravel	8	250
	Clay blue some large gravel- more wood	15	265
	Some clay, shale & broken basalt	5	270
	Basalt shell blue	14	284
	Broken basalt gray	9	293
	Black sandy clay	3	296
	Basalt hard	4	300
	PUMP TEST.	2	302
	DD: 235 ft.		
	SWL: 50 ft.		

Tpr

Tev

Tg86

S. F. No. [illegible]—12-54—[illegible]

Surface Elev. 2415'
Tg86 ~ 270' bgs
Elev. 2145

ER0456

STATE OF WASHINGTON
DEPARTMENT OF CONSERVATION
AND DEVELOPMENT

WELL LOG

No. Appli. #4690
Cert. 3677-A

Date 8-17, 1960

Record by well driller

Source driller's record

Location: State of WASHINGTON

County Lincoln

Area

Map

SE ¼ SE ¼ sec. 16 T 25 N., R. 37 ~~E.~~ W.

Diagram of Section

Drilling Co. Jasper Jones

Address Davenport, Wash.

Method of Drilling Date 19

Owner City of Davenport, Wash.

Address

Land surface, datum ft above below

CORRELATION	MATERIAL	THICKNESS (feet)	DEPTH (feet)
	(Transcribe driller's terminology literally but paraphrase as necessary, in parentheses. If material water-bearing, so state and record static level if reported. Give depths in feet below land-surface datum unless otherwise indicated. Correlate with stratigraphic column, if feasible. Following log of materials, list all casings, perforations, screens, etc.)		
	Top soil	4	4
	Broken basalt- some dirt	22	26
	Basalt shells- water	7	33
	Broken basalt - some clay	19	52
	" " some clay & gravel	3	55
	Broken basalt- blue	12	67
	Broken shells- some broken basalt & clay hole caving	16	83
	Broken basalt-some clay	3	86
	Basalt shells-hard blue	11	97
	Gray basalt hard	8	105
	" " "	3	108
	Broken basalt some clay	8	116
	Clay & shale blue	9	125
	" " " "	5	130
	Gravel & broken basalt	23	153
	Broken basalt & shale	34	187
	" " " "	7	194

Turn up (over) Sheet of sheets

WELL DATA SHEET

ERO 460

Well No.: L0465 WADOE No.: Date Drilled:

Method: Use:

Location: T25 R37 S21 Surface Elevation: est. / known

TOB(ftbgs): TD(ftbgs):

UNIT	TOP OF UNIT Depth bgs	Elev.	Thick.	COMMENTS

WATER DATA

SWL/Date: Temp.: Well Test:

Water Bearing Zones (ft. bgs):

CONSTRUCTION DATA

Casing: Open Interval(s):

Liner:

Seals:

Screens:

Perforations:

L-0465 413240E 527790N ERO46Ø

The Division of Water Management
Second Copy — Owner's Copy
Third Copy — Driller's Copy

WATER WELL REPORT
STATE OF WASHINGTON

Permit No. G3-21733P

(1) OWNER: Name CITY OF DAVENPORT Address DAVENPORT WASH. 37

(2) LOCATION OF WELL: County LINCOLN — NE ¼ SW ¼ Sec. 21 T. 25 N. R. 37E W.M.

Bearing and distance from section or subdivision corner N 40°-36'E, 2461' from SW cor. of section

PROPOSED USE: Domestic ☐ Industrial ☐ Municipal ☒ Irrigation ☐ Test Well ☐ Other ☐

(4) TYPE OF WORK: Owner's number of well (if more than one) #6

New well ☒ Deepened ☐ Reconditioned ☐

Method: Dug ☐ Cable ☒ Rotary ☐ Bored ☐ Driven ☐ Jetted ☐

(5) DIMENSIONS: Diameter of well 18 inches.

Drilled 975 ft. Depth of completed well 975 ft.

(6) CONSTRUCTION DETAILS:

Casing installed: 18" Diam. from +2 ft. to 445 ft.

Threaded ☐ ____" Diam. from ____ ft. to ____ ft.

Welded ☒ ____" Diam. from ____ ft. to ____ ft.

Perforations: Yes ☐ No ☒

Type of perforator used ____

SIZE of perforations ____ in. by ____ in.

____ perforations from ____ ft. to ____ ft.

____ perforations from ____ ft. to ____ ft.

____ perforations from ____ ft. to ____ ft.

Screens: Yes ☐ No ☒

Manufacturer's Name ____

Type ____ Model No. ____

Diam. ____ Slot size ____ from ____ ft. to ____ ft.

Diam. ____ Slot size ____ from ____ ft. to ____ ft.

Gravel packed: Yes ☐ No ☒ Size of gravel: ____

Gravel placed from ____ ft. to ____ ft.

Surface seal: Yes ☒ No ☐ To what depth? 445 ft.

Material used in seal CEMENT SLURRY

Did any strata contain unusable water? Yes ☐ No ☒

Type of water? ____ Depth of strata ____

Method of sealing strata off ____

(7) PUMP: Manufacturer's Name ____

Type: ____ HP ____

(8) WATER LEVELS: Land-surface elevation above mean sea level 2420

Static level 220 ft. below top of well Date MAY 7-75

Artesian pressure ____ lbs. per square inch Date ____

Artesian water is controlled by ____ (Cap, valve, etc.)

(9) WELL TESTS: Drawdown is amount water level is lowered below static level

Was a pump test made? Yes ☐ No ☒ If yes, by whom? ____

Yield: ____ gal./min. with ____ ft. drawdown after ____ hrs.

"SEE ATTACHED EXPLANATION"

" " " " "

Recovery data (time taken as zero when pump turned off) (water level measured from well top to water level)

Time	Water Level	Time	Water Level	Time	Water Level

Date of test ____

Bailer test 2200 gal./min. with 30 ft. drawdown after 12 hrs.

Artesian flow ____ g.p.m. Date ____

Temperature of water 68° Was a chemical analysis made? Yes ☐ No ☒

(10) WELL LOG:

Formation: Describe by color, character, size of material and structure, and show thickness of aquifers and the kind and nature of the material in each stratum penetrated, with at least one entry for each change of formation.

MATERIAL	FROM	TO
CLAY (BRN)	0	7
CLAY + BRN BASALT SOFT	7	16
BASALT BRN MED ★	16	38
BASALT BLK MED ★	38	84
BASALT GREY HARD	84	158
BASALT BLACK FRACTURED ★	158	195
BASALT BLACK HARD	195	303
BASALT GREY SOFT ★	303	320
BASALT BLACK MED	320	338
BASALT BLACK FRACTURED ★	338	393
BASALT BLACK HARD	393	490
BASALT BLACK MED ★	490	532
BASALT BLACK HARD	532	578
BASALT BLACK SOFT ★	578	649
BASALT BLACK MED	649	727
BASALT BLACK FRACTURED ★	727	766
BASALT GREY HARD	766	776
BASALT + GREY CLAY SOFT	776	782
BASALT BLACK MED ★	782	799
BASALT + GREY CLAY SOFT ★	799	804
BASALT BLACK MED	804	826
BASALT BLACK SOFT ★	826	834
BASALT HARD BLACK	834	836
BASALT MED BLACK ★	836	860
BASALT GREY HARD	860	890
BASALT BLACK FRACTURED ★	890	946
BASALT GREY HARD	946	956
CREVICE OR FRACTURE ★	956	959
BASALT GREY HARD	959	966
BASALT BLACK MED ★	966	975
2000		
- 1157		
★ INDICATES WATER BEARING STRATA		
NP		

Work started APRIL 10, 1974. Completed MAY 8, 1975

WELL DRILLER'S STATEMENT:

This well was drilled under my jurisdiction and this report is true to the best of my knowledge and belief.

NAME HOLMAN DRILLING CORP (Person, firm, or corporation) (Type or print)

Address E 3410 9TH AVE SPOKANE WN.

[Signed] Arnold E. Holman PRES. (Well Driller)

License No. 0189 Date JUNE 11, 1975

(USE ADDITIONAL SHEETS IF NECESSARY)

S. F. No. 1356—OS—(Rev. 5-69)—5-69.

6/18/75

The Department of Ecology does NOT Warranty the Data and/or the Information on this Well Report.

The Department of Ecology does NOT Warranty the Data and/or the Information on this Well Report.

WATER WELL REPORT

FOR

Well #6: Davenport, Wash.

(9) WELL TESTS: A pump test was performed following completion of the 18" nominal diameter well to a depth of 773 feet. Static water level before starting pump test was at about (-) 93 feet. The results of the pump test are attached.

After the pump test, which did not indicate much production possible at this depth, the well has been deepened with a 12" nominal hole to a depth of 975 feet. The City of Davenport has made arrangements to test pump the well again, probably in the last week in June. Results of this test will be forwarded after completion.

The Department of Ecology does NOT Warranty the Data and/or the Information on this Well Report.

Hofman
RE 4-1013

DAVENPORT CITY WELL NO. 6 — COMPLETED MAY 8, 1975

DEPTH	MATERIAL	S. W. L.	REMARKS
0-7	Clay--Brown		
7-16	Basalt--Brown *		
16-38	Basalt--Brown *	12 ft.	24" hole drilled to 23'
38-84	Basalt--Black		18" casing cemented 0-35 ft.
84-158	Basalt--Grey	16 ft.	
158-195	Basalt--Black *		
195-303	Basalt--Black	16 ft.	
303-320	Basalt--Grey *	20 ft.	
320-338	Basalt--Black	27 ft.	
338-393	Basalt--Black *	27 ft.	
393-490	Basalt--Black Hard	27 ft.	18" casing set at 445 ft.
490-532	Basalt--Black *	27 ft.	Bottom 15' set in cement
532-578	Basalt--Black	27 ft.	
578-649	Basalt--Black 30ft*	100 ft.	First main aquifer
649-727	Basalt--Black	100 ft.	
727-766	Basalt--Black *	100 ft.	
766-773	Basalt--Grey Hard	100 ft.	Bottom of 17" hole
DEEPENING			
773-776	Basalt--Grey Hard	172 ft.	Start of 12" Hole
776-782	Basalt & Grey Clay	172 ft.	
782-799	Basalt--Black *	213 ft.	
799-804	Basalt & Grey Clay*	216 ft.	
804-826	Basalt--Black	217 ft.	
826-860	Basalt--Black *	213 ft.	
860-890	Basalt--Black Hard	211 ft.	
890-946	Basalt--Black *	219 ft.	Second main aquifer
946-958	Basalt--Grey Hard	219 ft.	
958-959	Crevice *	220 ft.	
959-955	Basalt--Hard	220 ft.	
956-975	Basalt--Med. *	220 ft.	Total Depth

* Indicates water bearing strata

Third Copy — Driller's Copy

STATE OF WASHINGTON

Permit No. [illegible]

(1) OWNER: Name CITY OF DAVENPORT Address DAVENPORT WASH ER0460-37

(2) LOCATION OF WELL: County LINCOLN — NE ¼ SW ¼ Sec. 21 T. 25 N., R. 37E W.M.

Bearing and distance from section or subdivision corner N 40°-36' E, 2461' from SW cor. of section

PROPOSED USE: Domestic ☐ Industrial ☐ Municipal ☒ Irrigation ☐ Test Well ☐ Other ☐

(4) TYPE OF WORK: Owner's number of well (if more than one) #6

New well ☒ Method: Dug ☐ Bored ☐ Deepened ☐ Cable ☒ Driven ☐ Reconditioned ☐ Rotary ☐ Jetted ☐

(5) DIMENSIONS: Diameter of well 18 inches. Drilled 975 ft. Depth of completed well 975 ft.

(6) CONSTRUCTION DETAILS:

Casing installed: 18" Diam. from +2 ft. to 445 ft.

Threaded ☐ ____" Diam. from ____ ft. to ____ ft.

Welded ☒ ____" Diam. from ____ ft. to ____ ft.

Perforations: Yes ☐ No ☒

Type of perforator used ____

SIZE of perforations ____ in. by ____ in.

____ perforations from ____ ft. to ____ ft.

____ perforations from ____ ft. to ____ ft.

____ perforations from ____ ft. to ____ ft.

Screens: Yes ☐ No ☒

Manufacturer's Name ____

Type ____ Model No. ____

Diam. ____ Slot size ____ from ____ ft. to ____ ft.

Diam. ____ Slot size ____ from ____ ft. to ____ ft.

Gravel packed: Yes ☐ No ☒ Size of gravel: ____

Gravel placed from ____ ft. to ____ ft.

Surface seal: Yes ☒ No ☐ To what depth? 445 ft.

Material used in seal CEMENT SLURRY

Did any strata contain unusable water? Yes ☐ No ☒

Type of water? ____ Depth of strata ____

Method of sealing strata off ____

(7) PUMP: Manufacturer's Name ____

Type: ____ H.P. ____

(8) WATER LEVELS: Land-surface elevation above mean sea level 2420 ft.

Static level 220 ft. below top of well Date MAY 7-75

Artesian pressure ____ lbs. per square inch Date ____

Artesian water is controlled by ____ (Cap, valve, etc.)

(9) WELL TESTS: Drawdown is amount water level is lowered below static level

Was a pump test made? Yes ☐ No ☒ If yes, by whom? ____

Yield: ____ gal./min. with ____ ft. drawdown after ____ hrs.

"SEE ATTACHED EXPLANATION"

" " " "

Recovery data (time taken as zero when pump turned off) (water level measured from well top to water level)

Time	Water Level	Time	Water Level	Time	Water Level

Date of test ____

Bailer test 22.06 gal./min. with 3.2 ft. drawdown after 1.2 hrs.

Artesian flow ____ g.p.m. Date ____

Temperature of water 68° Was a chemical analysis made? Yes ☐ No ☒

(10) WELL LOG:

Formation: Describe by color, character, size of material and structure, and show thickness of aquifers and the kind and nature of the material in each stratum penetrated, with at least one entry for each change of formation.

MATERIAL	FROM	TO
CLAY (BRN)	0	7
CLAY + BRN BASALT SOFT	7	16
BASALT BRN MED ★	16	38
BASALT BLK MED ★	38	84
BASALT GREY HARD	84	158
BASALT BLACK FRACTURED ★	158	195
BASALT BLACK HARD	195	303
BASALT GREY SOFT ★	303	320
BASALT BLACK MED	320	338
BASALT BLACK FRACTURED ★	338	393
BASALT BLACK HARD	393	490
BASALT BLACK MED ★	490	532
BASALT BLACK HARD	532	578
BASALT BLACK SOFT ★	578	649
BASALT BLACK MED	649	727
BASALT BLACK FRACTURED ★	727	766
BASALT GREY HARD	766	776
BASALT + GREY CLAY SOFT	776	782
BASALT BLACK MED ★	782	799
BASALT + GREY CLAY SOFT ★	799	804
BASALT BLACK MED	804	826
BASALT BLACK SOFT ★	826	834
BASALT HARD BLACK	834	836
BASALT MED BLACK ★	836	860
BASALT GREY HARD	860	890
BASALT BLACK FRACTURED ★	890	946
BASALT GREY HARD	946	958
CREVICE OR FRACTURE ★	958	959
BASALT GREY HARD	959	966
BASALT BLACK MED ★	966	975
20.00		
15.7		
★ INDICATES WATER BEARING STRATA		

Work started APRIL 10, 1974. Completed MAY 8, 1975

WELL DRILLER'S STATEMENT:

This well was drilled under my jurisdiction and this report is true to the best of my knowledge and belief.

NAME HOLMAN DRILLING CORP (Person, firm, or corporation) (Type or print)

Address E 3410 9TH AVE SPOKANE WN.

[Signed] Arnold E. Holman PRES (Well Driller)

License No. 0189 Date JUNE 11, 1975

6/18/75

(USE ADDITIONAL SHEETS IF NECESSARY)

S. F. No. 7356—OS—(Rev. 5-69)—5-69.

25/37-21

L0465

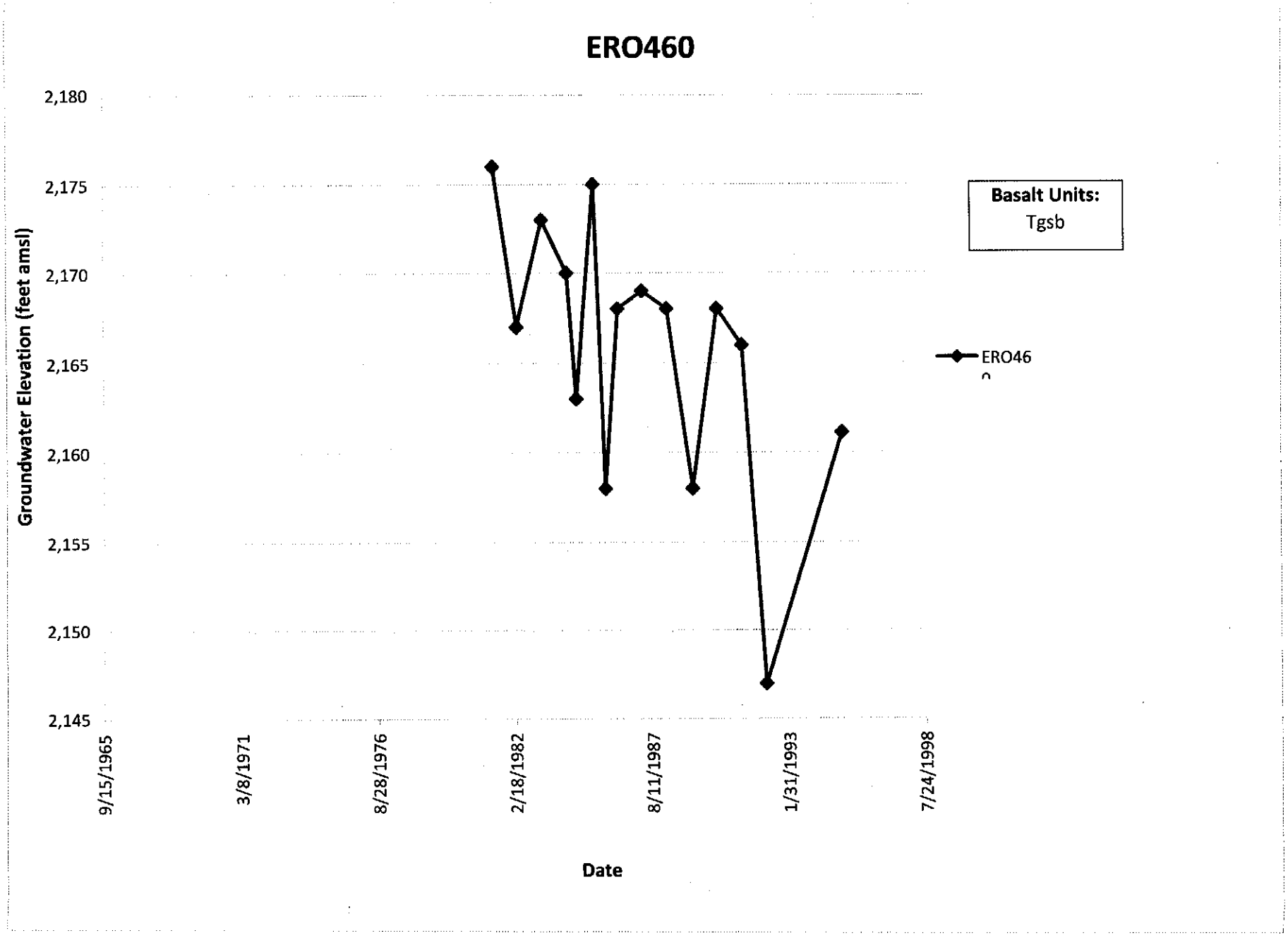

DRAFT

VERSION: 01/26/2010

Davenport

WELL DATA SHEET

Well No.: L0463 WADOE No.: Date Drilled:

Method: Use:

Location: T25 R37 S21 Surface Elevation: est. / known

TOB(ftbgs): TD(ftbgs):

UNIT	TOP OF UNIT Depth bgs	TOP OF UNIT Elev.	Thick.	COMMENTS

Deep Tg

WATER DATA

SWL/Date: Temp.: Well Test:

Water Bearing Zones (ft. bgs):

CONSTRUCTION DATA

Casing: Open Interval(s):

Liner:

Seals:

Screens:

Perforations:

L-0463

414236E 5278733N

Corrected copy

WATER WELL REPORT

STATE OF WASHINGTON

Start Card No. W059906
Unique Well I.D. # ABJ061
Water Right Permit No.

(1) OWNER: Name CITY OF DAVENPORT Address P.O. BOX 26 DAVENPORT, WA 99122-

(2) LOCATION OF WELL: County LINCOLN - NE 1/4 NE 1/4 Sec 21 T 25 N., R 37 WM
(2a) STREET ADDRESS OF WELL (or nearest address) CORNER OF ROSS & NICOLS.

(3) PROPOSED USE: MUNICIPAL

(4) TYPE OF WORK: Owner's Number of well (If more than one) 7
NEW WELL Method: ROTARY

(5) DIMENSIONS: Diameter of well 16 inches
Drilled 959 ft. Depth of completed well 845 ft.

(6) CONSTRUCTION DETAILS:
Casing installed: 20 " Dia. from +1 ft. to 37 ft.
16 " Dia. from +2 ft. to 447 ft.
" Dia. from ft. to ft.

Perforations: NO
Type of perforator used
SIZE of perforations in. by in.
perforations from ft. to ft.
perforations from ft. to ft.
perforations from ft. to ft.

Screens: NO
Manufacturer's Name
Type Model No.
Diam. slot size from ft. to ft.
Diam. slot size from ft. to ft.

Gravel packed: YES Size of gravel 1.25
Gravel placed from 845 ft. to 959 ft.

Surface seal: YES To what depth? 447 ft.
Material used in seal BENTONITE
Did any strata contain unusable water? NO
Type of water? Depth of strata ft.
Method of sealing strata off OVERBORE

(7) PUMP: Manufacturer's Name
Type H.P.

(8) WATER LEVELS: Land-surface elevation above mean sea level ... ft.
Static level 265 ft. below top of well Date 09/22/95
Artesian Pressure lbs. per square inch Date
Artesian water controlled by

(10) WELL LOG

Formation: Describe by color, character, size of material and structure, and show thickness of aquifers and the kind and nature of the material in each stratum penetrated, with at least one entry for each change in formation.

MATERIAL	FROM	TO
TOPSOIL	0	1
BOULDERS	1	10
DECOMPOSED POROUS BASALT	10	33
FRACTURED BASALT BLACK	33	49
DECOMPOSED BASALT	49	53
FRACTURED BASALT BLACK	53	110
GREY BASALT HARD	110	124
BASALT LAYER(S) DECOMPOSED	124	150 Tpr
FRACTURED BLACK BASALT	150	205
GREY BASALT HARD	205	242
BLUE SHALE	242	246 Tsv
BASALT LAYER(S) SHALE	246	265
FRACTURED BLACK BASALT	265	283 Tgsb
BASALT WITH SHALE, LAYERED	283	336
FRACTURED BLACK BASALT	336	360
FRACTURED GREY BASALT	360	378
BASALT CLAY LAYER(S)	378	418
FRACTURED BLACK BASALT	418	438
BLACK BASALT HARD	438	476
BLACK BASALT SHALE, LAYERED	476	500
FRACTURED BLACK BASALT	500	506
BASALT POROUS LAYER(S)	506	660
FRACTURED BLACK BASALT	660	723
BASALT POROUS LAYER(S)	723	781
SAND BLUE SHALE	781	783
BLACK BASALT HARD	783	795 Tgsc?
GREY BASALT HARD	795	810
FRACTURED GREY BASALT	810	846
POROUS BLACK BASALT	846	858
SOFT SAND	858	881
SAND HARD CLAY	881	902 Pre-Tcv
DECOMPOSED GRANITE	902	915
GRANITE	915	959
	959	

Work started 06/26/95 Completed 08/15/95

(9) WELL TESTS: Drawdown is amount water level is lowered below static level.
Was a pump test made? YES If yes, by whom? PONDEROSA
Yield: 1050 gal./min with 355 ft. drawdown after 8 hrs.

Recovery data

Time	Water Level	Time	Water Level	Time	Water Level

Date of test 09/22/95
Bailer test gal/min. ft. drawdown after hrs.
Air test gal/min. w/ stem set at ft. for hrs.
Artesian flow g.p.m. Date
Temperature of water 67 Was a chemical analysis made? NO

WELL CONSTRUCTOR CERTIFICATION:
I constructed and/or accept responsibility for construction of this well, and its compliance with all Washington well construction standards. Materials used and the information reported above are true to my best knowledge and belief.

NAME PONDEROSA DRILLING
(Person, firm, or corporation) (Type or print)

ADDRESS E 6030 BROADWAY

[SIGNED] [signature] License No. 2095

Contractor's Registration No. PO-ND-XI*248JE Date 01/22/96

Surface Elev ~2420
Tgsb 246'655
Elev. 2174

The Department of Ecology does NOT Warranty the Data and/or the Information on this Well Report.

L-0464 414159E 5278702N

File Original and First Copy with Department of Ecology
Second Copy — Owner's Copy
Third Copy — Driller's Copy

WATER WELL REPORT

STATE OF WASHINGTON

Start Card No. W059906
UNIQUE WELL I.D. # ABJ061
Water Right Permit No.

(1) OWNER: Name ~~City of Davenport~~ Address P.O. BOX 26 Davenport, WA 99122

(2) LOCATION OF WELL: County Lincoln — NE 1/4 NE 1/4 Sec 21 T. 25 N. R. 37 W.M.

(2a) STREET ADDRESS OF WELL (or nearest address) Corner of Ross & Nicols Streets

(3) PROPOSED USE: ☐ Domestic ☐ Irrigation ☐ DeWater Industrial ☐ Test Well ☐ Municipal ☒ Other ☐

(4) TYPE OF WORK: Owner's number of well (if more than one) 7
Abandoned ☐ New well ☒ Deepened ☐ Reconditioned ☐ Method: Dug ☐ Cable ☐ Rotary ☒ Bored ☐ Driven ☐ Jetted ☐

(5) DIMENSIONS: Diameter of well 16 inches. Drilled 959 feet. Depth of completed well 845 ft.

(6) CONSTRUCTION DETAILS:
Casing installed: 20" Diam. from +1 ft. to 37 ft.
Welded ☒ Liner installed ☐ Threaded ☐ 16" Diam. from +2 ft. to 447 ft.
" Diam. from ft. to ft.

Perforations: Yes ☐ No ☒
Type of perforator used
SIZE of perforations in. by in.
perforations from ft. to
perforations from ft. to 20
perforations from ft. to ft.

RECEIVED
DEPARTMENT OF ECOLOGY
EASTERN REGIONAL OFFICE

Screens: Yes ☐ No ☒
Manufacturer's Name
Type Model No.
Diam. Slot size from ft. to ft.
Diam. Slot size from ft. to ft.

Gravel packed: Yes ☒ No ☐ Size of gravel 1 1/4"
Gravel placed from 845 ft. to 959 ft.

Surface seal: Yes ☒ No ☐ To what depth? 447 ft.
Material used in seal cement
Did any strata contain unusable water? Yes ☐ No ☒
Type of water? Depth of strata
Method of sealing strata off

(7) PUMP: Manufacturer's Name
Type: H.P.

(8) WATER LEVELS: Land-surface elevation above mean sea level ft.
Static level ft. below top of well Date
Artesian pressure lbs. per square inch Date
Artesian water is controlled by (Cap, valve, etc.)

(9) WELL TESTS: Drawdown is amount water level is lowered below static level
Was a pump test made? Yes ☐ No ☐ If yes, by whom?
Yield: gal./min. with ft. drawdown after hrs.
" " " "
" " " "

Recovery data (time taken as zero when pump turned off) (water level measured from well top to water level)

Time	Water Level	Time	Water Level	Time	Water Level

Date of test
Bailer test gal./min. with ft. drawdown after hrs.
Airtest gal./min. with stem set at ft. for hrs.
Artesian flow g.p.m. Date
Temperature of water Was a chemical analysis made? Yes ☐ No ☐

(10) WELL LOG or ABANDONMENT PROCEDURE DESCRIPTION

Formation: Describe by color, character, size of material and structure, and show thickness of aquifers and the kind and nature of the material in each stratum penetrated, with at least one entry for each change of information.

MATERIAL	FROM	TO
Top Soil	0	1
Bolders	1	10
Decomposed Porus Basalt	10	33
Fractured Basalt Black	33	49
Decomposed Basalt	49	53
Fractured Basalt Black	53	110
Gray Basalt Hard	110	124
Black Basalt with Layers	124	
of decomposed basalt		150
Fractured Black Basalt	150	205
Gray Basalt Hard	205	242
Blue Shale	242	246
Black Basalt with Layers of Blue Shale	246	265
Fractured Black Basalt	265	283
Black Basalt w/Layers of Blue Shale	283	336
Fractured Black Basalt	336	360
Fractured Gray Basalt	360	378
Black Basalt w/Layers of Brown Clay	378	418
Fractured Black Basalt	418	438
Black Basalt Hard	438	476
Black Basalt w/Layers Blue Shale	476	500
Fractured Black Basalt	500	506
Black Basalt / Layers Porus	506	660
Fractured Black Basalt	660	723
Black Basalt / Layers Porus	723	781
Sand with Blue Shale	781	783
Black Basalt Hard	783	795
Gray Basalt Hard	795	810
Fractured Gray Basalt Hard	810	~~846~~
~~Porus Black Basalt~~	~~846~~	~~858~~
Soft Wood & Sand	858	881
Sand & Hard Gray Clay	881	902
Decomposed Granite	902	915
Granite	915	959

Work Started June 26 1995 Completed August 14 1995

WELL CONSTRUCTOR CERTIFICATION:

I constructed and/or accept responsibility for construction of this well, and its compliance with all Washington well construction standards. Materials used and the information reported above are true to my best knowledge and belief.

NAME PONDEROSA DRILLING & DEVELOPMENT, INC. (PERSON, FIRM, OR CORPORATION) (TYPE OR PRINT)

Address E. 6010 BROADWAY AVE., SPOKANE, WA 99212

(Signed) Roger Kuhlman (WELL DRILLER) License No. 2095
Roger Kuhlman

Contractor's Registration No. PONDE*248JE Date Aug 25 1995

(USE ADDITIONAL SHEETS IF NECESSARY)

ECL 050-1-20 (2/93) * * 1

The Department of Ecology does NOT Warranty the Data and/or the Information on this Well Report.

Appendix B

Davenport

Water Level Data, Including Hydrographs

DAVENPORT MUNICIPAL WELLS								
GSI DOE Log File ID	Start Card #	GWMA ID	Well Tag #	WR application #	WR Certificate #	DOE Well ID	ERO/AAE	Date Drilled
L0454		L0454		4690	3677-A		ERO 456	1960
L0458		L0458		5893	4317		ERO444	1962
L0461		L0461		#650	#385A			1948
L0462		L0462					ERO443	1962
Well 6 - L0465		L0465	ABR081		G3-21733P		ERO460	1975
Well 7 - L0463	W059906	L0463	ARJ061			161002		1995

NEARBY ERO WELLS								
WELL_ID	GWMAID	XCOORD	YCOORD	CasedIntervalsConfirmed	SealedintervalsConfirmed	SURFACE_ELEV	TopOfWanapum	Tgsb_elevation
ERO441		2218307.06	853351.405			2427		
ERO442		2218307.06	853351.405			2420		
ERO443-2	L0462	2218937.76	853339.876			2427		
ERO444-1	L0458	2213538.53	851050.707			2452		
ERO456-4	L0454	2232492.27	862347.91	WB GRB	WB GRB	2442	2441.00	2223.55
ERO460-6	L0465	2218435.08	852736.956			2427		

	No Hydrograph
	discrepency in data

DAVENPORT MUNICIPAL WELLS								
GSI DOE Log File ID	Start Card #	GWMA ID	Well Tag #	City Well Name	Total Depth	Seal Depth	Casing Depth	SWL When Drilled
L0454		L0454			302			50
L0458		L0458			360		63	82
L0461		L0461			722		15	90
L0462		L0462		Well #2	495		60	89
Well 6 - L0465		L0465	ABR081	Well #6	975	445	445	220
Well 7 - L0463	W059906	L0463	ARJ061	Well #7	959	447	447	265

NEARBY ERO WELLS								
WELL_ID	**GWMAID**	**XCOORD**	**YCOORD**	**ElevationSealBottom**	**WellDepth**	**AverageRateChange**	**SubBasin**	**OpenIntervalDiameter**
ERO441		2218307.06	853351.405		505	0.750251	Basin6	
ERO442		2218307.06	853351.405		503	-4.038462	Basin6	
ERO443-2	L0462	2218937.76	853339.876		495	-9.355312	Basin6	
ERO444-1	L0458	2213538.53	851050.707		360	0.035703	Basin6	
ERO456-4	L0454	2232492.27	862347.91	2442	302	-3.199301	Basin6	
ERO460-6	L0465	2218435.08	852736.956		975	-1.140242	Basin6	

	No Hydrograph
	discrepency in data

DAVENPORT MUNICIPAL WELLS					
GSI DOE Log File ID	Start Card #	GWMA ID	Well Tag #	Cased Open Intervals	Seal Open Interval
L0454		L0454			
L0458		L0458			
L0461		L0461			
L0462		L0462			
Well 6 - L0465		L0465	ABR081		
Well 7 - L0463	W059906	L0463	ARJ061	Tgsb,Basement	Tgsb,Basement

NEARBY ERO WELLS							
WELL_ID	GWMAID	XCOORD	YCOORD	GrounwaterPumping	XCOORDStatePlaneEast	YCOORDStatePaneNorth	YCOORD Latitude
ERO441		2218307.06	853351.405	253.41			47.64969
ERO442		2218307.06	853351.405	253.41			47.64969
ERO443-2	L0462	2218937.76	853339.876	253.41			47.64961
ERO444-1	L0458	2213538.53	851050.707	253.41			47.64378
ERO456-4	L0454	2232492.27	862347.91	253.41	2232492.273	862347.9096	47.65992
ERO460-6	L0465	2218435.08	852736.956	253.41			47.648

	No Hydrograph
	discrepency in data

DAVENPORT MUNICIPAL WELLS			
GSI DOE Log File ID	Start Card #	GWMA ID	Well Tag #
L0454		L0454	
L0458		L0458	
L0461		L0461	
L0462		L0462	
Well 6 - L0465		L0465	ABR081
Well 7 - L0463	W059906	L0463	ARJ061

NEARBY ERO WELLS

WELL_ID	GWMAID	XCOORD	YCOORD	XCOORD Longitude	1971	1972	1973	1974	1975	1976	1977	1978	1979	1980	1981
ERO441		2218307.06	853351.405	-118.1554			2272	2268							2293
ERO442		2218307.06	853351.405	-118.1554			2117								2239
ERO443-2	L0462	2218937.76	853339.876	-118.1528			2290	2360						2308	2312
ERO444-1	L0458	2213538.53	851050.707	-118.175									2378	2377	2378
ERO456-4	L0454	2232492.27	862347.91	-118.1406		2422	2375								2383
ERO460-6	L0465	2218435.08	852736.956	-118.1549											2191

	No Hydrograph
	discrepency in data

DAVENPORT MUNICIPAL WELLS			
GSI DOE Log File ID	Start Card #	GWMA ID	Well Tag #
L0454		L0454	
L0458		L0458	
L0461		L0461	
L0462		L0462	
Well 6 - L0465		L0465	ABR081
Well 7 - L0463	W059906	L0463	ARJ061

NEARBY ERO WELLS

WELL_ID	GWMAID	XCOORD	YCOORD	1982	1983	1984	1985	1986	1987	1988	1989	1990
ERO441		2218307.06	853351.405	2290	2250.5	2292.63	2291.1	2295.3		2288	2298.5	2295
ERO442		2218307.06	853351.405	2169	2129	2166	2167	2171	2147	2148	2155	2170
ERO443-2	L0462	2218937.76	853339.876	2320	2311	2317	2317	2319	2312	2314	2316	2311
ERO444-1	L0458	2213538.53	851050.707	2375.3	2378.1	2383.27	2381.8	2381.8	2381.1	2381.8	2375.3	2374
ERO456-4	L0454	2232492.27	862347.91	2380	2394	2388	2387	2388	2384	2382	2387	2383
ERO460-6	L0465	2218435.08	852736.956	2182	2188	2181.5	2181.5	2183	2184	2183	2173	2183

	No Hydrograph
	discrepency in data

DAVENPORT MUNICIPAL WELLS			
GSI DOE Log File ID	Start Card #	GWMA ID	Well Tag #
L0454		L0454	
L0458		L0458	
L0461		L0461	
L0462		L0462	
Well 6 - L0465		L0465	ABR081
Well 7 - L0463	W059906	L0463	ARJ061

NEARBY ERO WELLS													
WELL_ID	GWMAID	XCOORD	YCOORD	1991	1992	1993	1994	1995	1996	1997	1998	1999	2000
ERO441		2218307.06	853351.405	2292.7	2283.2	2290.8		2291.6				2299	
ERO442		2218307.06	853351.405	2173	2117								
ERO443-2	L0462	2218937.76	853339.876	2310	2307	2134.4		2105.5					
ERO444-1	L0458	2213538.53	851050.707	2372.7	2371	2373.3		2378.8	2383			2387	2385
ERO456-4	L0454	2232492.27	862347.91	2380	2309								
ERO460-6	L0465	2218435.08	852736.956	2181	2162			2176.1					

	No Hydrograph
	discrepency in data

DAVENPORT MUNICIPAL WELLS			
GSI DOE Log File ID	Start Card #	GWMA ID	Well Tag #
L0454		L0454	
L0458		L0458	
L0461		L0461	
L0462		L0462	
Well 6 - L0465		L0465	ABR081
Well 7 - L0463	W059906	L0463	ARJ061

NEARBY ERO WELLS													
WELL_ID	GWMAID	XCOORD	YCOORD	2001	2002	2003	2004	2005	2006	2007	2008	2009	2010
ERO441		2218307.06	853351.405										
ERO442		2218307.06	853351.405										
ERO443-2	L0462	2218937.76	853339.876										
ERO444-1	L0458	2213538.53	851050.707	2382	2380	2377.7	2376.9	2375.2	2378.6		2378.9	2379	2379
ERO456-4	L0454	2232492.27	862347.91										
ERO460-6	L0465	2218435.08	852736.956										

	No Hydrograph
	discrepency in data

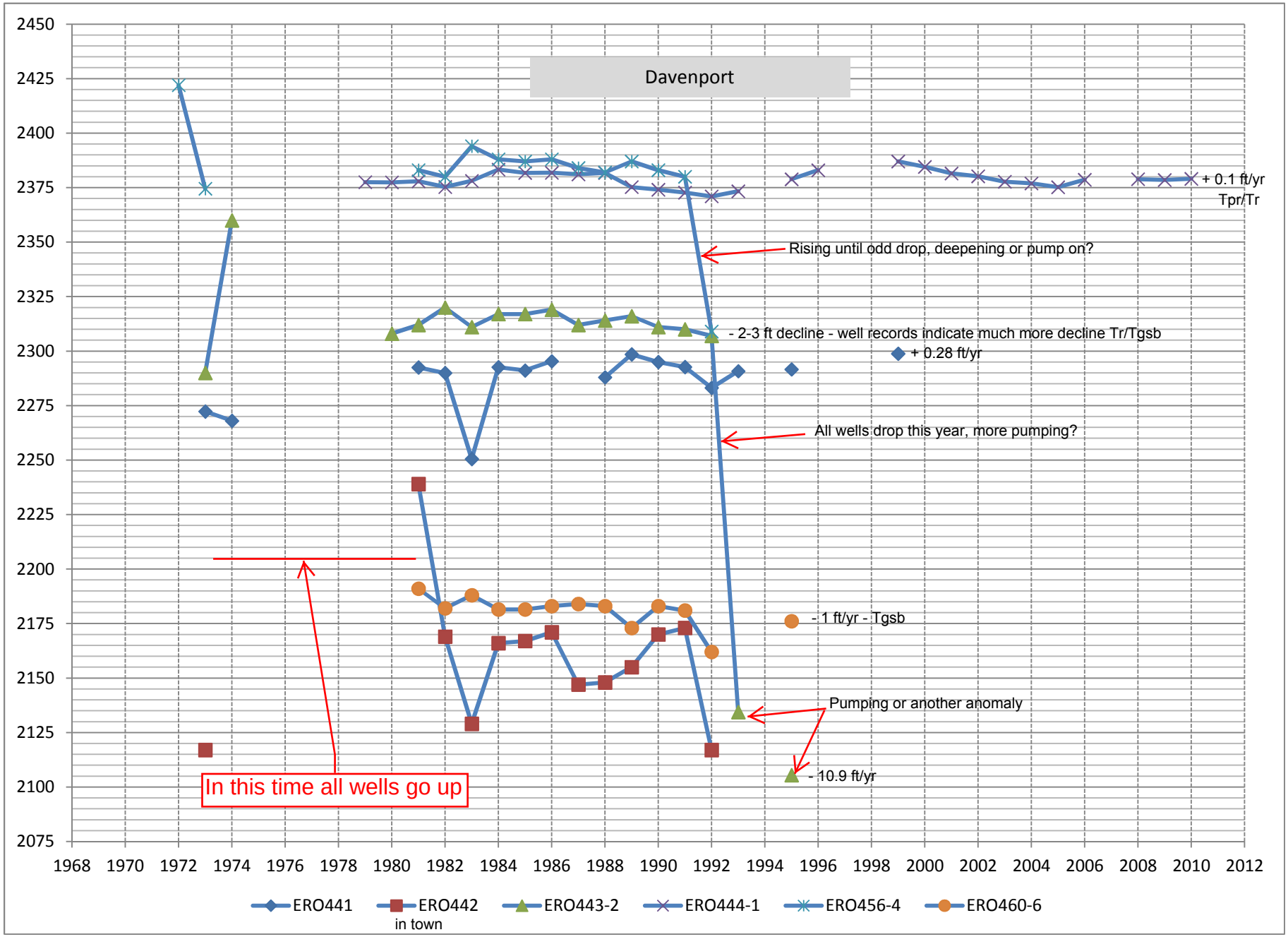
Davenport
2450
2425
2400
2375
2350
2325
2300
2275
2250
2225
2200
2175
2150
2125
2100
2075
1968
1970
1972
1974
1976
1978
1980
1982
1984
1986
1988
1990
1992
1994
1996
1998
2000
2002
2004
2006
2008
2010
2012
+ 0.1 ft/yr
Tpr/Tr
Rising until odd drop, deepening or pump on?
- 2-3 ft decline - well records indicate much more decline Tr/Tgsb
+ 0.28 ft/yr
All wells drop this year, more pumping?
- 1 ft/yr - Tgsb
Pumping or another anomaly
- 10.9 ft/yr
In this time all wells go up
ERO441
ERO442
in town
ERO443-2
ERO444-1
ERO456-4
ERO460-6

Appendix C

Descriptions of Groundwater Model Simulations

Description of Groundwater Model Simulations

Prepared by:

S.S. PAPADOPULOS & ASSOCIATES, INC.
Environmental & Water-Resource Consultants

October, 2012

7944 Wisconsin Avenue, Bethesda, Maryland 20814-3620 • (301) 718-8900

Table of Contents

Page

List of Figures ii

List of Tables ii

List of Attachments ii

Purpose and Objectives 1

Overview of the GWMA Groundwater Flow Model 2

- GWMA Model Development 2
- Model Structure, Simulation Code and Boundary Conditions 2
- Modifications to the Standard MODFLOW Code 4
- Previous GWMA Model Applications 4

Recent Updates to the GWMA Model 5

- Groundwater Pumping 5
- Crop Classification 5
- Simplified Surface Energy Balance 6
- Validation of Crop Classification and Groundwater Withdrawal 7
- Allocation to Nearby Agricultural Wells 8
- Municipal Wells 8
- Model Stress Periods and Seasonal Pumping Distribution 9
- Re-Calibration 10

Municipal Supply Projections - Calculation Approach 12

- Representation of Pumping 12
- Validation to Historic Field Data 17
- Future Demand Projections 18

Results 19

- Projected Water Level Declines 19

References 21

Figures 1

Tables 18

Figures

Tables

Appendices

List of Figures

Figure 1 GWMA Model Extents and Boundaries

Figure 2 Landsat-Based Spectral Reflectance Delineation by Crop Type

Figure 3 Agro-Meteorological Data for the Odessa Area Flux Station

Figure 4 Evapotranspiration-Based Seasonal Water Requirement Thematic Map

Figure 5 Groundwater Pumping by Well (2000) Thematic Map➔ verify title, none was provided

Figure 2 Estimated Total Groundwater Pumping within the GWMA

Figure 3 Locations of Groundwater Pumping within the GWMA

Figure 4 Calibration Scatter Plot for Pre-Development Conditions

Figure 5 Calibration Hydrographs during Development Conditions

Figure 6 Locations of the Simulated Municipalities

Figure 7 Schematic Illustrating Various Stages in Well Operations and Efficiency

Figure 8 Annotated Example of the Life-Cycle of a Municipal Supply Well

Figure 9 Examples of Simulated and Observed Municipal Well Water Level Declines

Figure 10 Historic and Projected Demand using a 2% Escalation for Municipal Demands and Zero Escalation for Agricultural Demands

Figure 11 Projected Supply Shortfalls (*Demand minus Yield*) using a 2% Escalation for Municipal Demands and Zero Escalation for Agricultural Demands

Figure 12 Simulated Recent-Time and Projected Late-Time "Static" and "Dynamic" Water Level Changes

List of Tables

Table 1 Estimated Crop Types Using Landsat-Based Classification versus Reported Crop Types from the Washington State Department of Agriculture (WSDA) for an Area of Approximately 15,000 Hectares (3029 fields).

Table 2 Current Parameterization of Hydraulic Properties in the GWMA Model

Table 3 List of the Simulated Municipalities

Table 4 Tabulation of Projected "Static" and "Dynamic" Water Level Declines

Table 5 Summary Statistics for Projected "Static" and "Dynamic" Water Level Declines

List of Attachments

Attachment 1 Municipal Reports

Purpose and Objectives

This Appendix describes the application of the previously developed groundwater flow model to help evaluate historic and likely future water resource availability at selected municipalities throughout the four-county Groundwater Management Area (GWMA). Specifically, the GWMA model is used herein to help understand:

- Historic patterns in resource demands and actual yields at selected municipalities.
- Project likely future yields in response to projected increasing demands at the same municipalities.

This Appendix describes how the GWMA groundwater model was used to make these assessments, emphasizing the data sets used to prepare inputs to the predictive (i.e., future condition) simulations; the simulation methods used; and the post-processing of the simulation results to obtain useful graphical and tabular summaries of projected resource availability.

This Appendix commences by providing an overview of the GWMA groundwater flow model, and previous applications of the model for water resource evaluations. Recent updates to the GWMA model are then summarized. The calculation approach to evaluating municipal supplies is then described; and the methods and assumptions used to develop future municipal demand projections summarized. Results of the analyses are then summarized. This Appendix does not present detailed results from the simulations: rather, selected results of the modeling analyses are tabulated and presented in the main report, and contribute to the individual municipal reports that are included as an Attachment to this report.

Overview of the GWMA Groundwater Flow Model

GWMA Model Development

The GWMA began development of the GWMA Hydrologic Groundwater Modeling project in 2009 with the objective of creating a groundwater model encompassing Adams, Franklin, Grant and Lincoln Counties to identify the mechanisms and magnitudes of groundwater recharge and discharge on a four-county scale and within certain local subareas, or groundwater sub-regions, where groundwater availability is of particular concern. The goal of the model development effort is to enable the GWMA to evaluate current and future groundwater needs, and support future decision-making about water resource issues.

Data sets that support the GWMA model development are described in numerous reports that are cited in the main body of this report. Development of the numerical implementation of the GWMA groundwater flow model is principally described in the following reports:

- "Groundwater Model Development Process for the Columbia Basin Ground Water Management Area of Adams, Franklin, Grant, and Lincoln Counties, Washington: Progress Report of the Groundwater Hydrologic Modeling Project" (GWMA, 2010a)
- "Columbia Basin Ground Water Management Area Hydrologic Groundwater Modeling Project: Interim Report" (GWMA, 2010b)
- "Groundwater flow model of the Columbia Basin Ground Water Management Area of Adams, Franklin, Grant, and Lincoln Counties: Model Development, Calibration, and Application to Evaluate Groundwater Supplies in Four Sub-Regions" (GWMA, 2011)

These reports provide detailed information on the development and previous applications of the GWMA groundwater flow model. Here, an overview of the GWMA model is provided to familiarize the reader with the general geographic extents and design of the model.

Model Structure, Simulation Code and Boundary Conditions

Simulations undertaken by the GWMA actually comprise two separate but linked groundwater models. The lateral extents of the GWMA area – which are defined on the basis of major intra-basin hydrologic features together with important geo-political boundaries – lie within this regional setting (Figure 1). This provides for a manageable model size, but can present a challenge for the assignment of lateral boundary conditions. Within the upper aquifer units the GWMA is bounded laterally in many areas by intra-basin hydrologic boundaries: however, at increasing depths the influence of these hydrologic boundaries diminishes, and at some depth they no longer form viable lateral hydrologic boundaries to the GWMA region. To overcome this, a simplified groundwater flow model of the entire Columbia Plateau Regional Aquifer System (CPRAS) was constructed, referred to as the Watershed Model. The Watershed model encompasses and extends beyond the four-county GWMA model, and is used to provide constraints on the lateral inflows to and outflows from the GWMA model. More detail is provided in GWMA (2010a, b; 2011). All subsequent analyses and discussions that are presented in the current report refer only to the four-county GWMA model unless noted otherwise.

The groundwater flow simulation code used to execute the Watershed and GWMA models is based upon the United States Geological Survey (USGS) three-dimensional (3D) modular groundwater flow model (MODFLOW) (Harbaugh et al., 2000). Version 1.18 of the MODFLOW-2000 release of the MODFLOW code was selected since it has the principal simulation capabilities required to meet the modeling objectives set forth above, yet is relatively simple to use and can be executed on a variety of computers and operating systems without modification.

The following widely-used MODFLOW processes and packages are used in both the Watershed and GWMA models:

- Basic (BAS) Package – providing information about the simulation that does not vary with time, such as a-priori areas of active and inactive cells, and the initial conditions (initial heads).
- Layer-Property Flow (LPF) Process – representing information about the aquifer that does not vary with time, including the properties of hydraulic conductivities and storage.
- Discretization (DIS) Package – providing information on the spatial and temporal discretization of the model.
- Recharge (RCH) Package – representing net deep percolation that accrues at the water table where it is accessible.
- Drain (DRN) Package – representing topographic depressions and upland tributary areas that can act as areas of groundwater discharge when they intercept the water table.
- River (RIV) Package – representing water bodies for which routing of water is not simulated.
- Horizontal Flow Barrier (HFB) Package – representing the influence of internal boundaries on groundwater movement. Internal boundaries include the limited areal extent of individual basalt flows; the presence of faults, folds, and buried sills and dikes.

The following MODFLOW processes and packages are used only in the GWMA model, to represent certain system characteristics in more realistic detail:

- Lake (LAK2) Package (Council, 1999) – representing major water bodies, some of which possess controlled release structures (i.e., dams).
- Multi-Node Well (MNW2) Package – representing pumped, and possibly un-pumped but improperly or incompletely abandoned, wells.
- Streamflow-Routing (SFR) Package – representing water bodies for which routing of water is considered in the simulations, such as rivers that directly interact with water bodies that are represented using the LAK2 package.

The Watershed and GWMA model representations of the complex hydrostratigraphy of the CPRAS is detailed in GWMA (2010a, b; 2011).

Modifications to the Standard MODFLOW Code

Programming modifications were implemented within the standard MODFLOW-2000 code to mitigate "dry cells", achieve desirable solution convergence, and stabilize and accelerate the simulations undertaken with the GWMA model in the presence of highly non-linear internal boundary conditions and strongly-contrasting aquifer properties. These modifications comprise:

- A saturation factor applied to partially saturated cells to reduce water transmissibility
- A Newton-Raphson linearization scheme to provide stable and locally rapid convergence
- A backtracking scheme to control the head change each solution iteration
- Adaptive time-stepping to limit the size of the time step in numerically difficult conditions
- An orthomin solver capable of managing the asymmetric implicit equations that result from the use of the above numerical techniques

Details on these modifications are provided by Bedekar et al. (2011) and GWMA (2011).

Previous GWMA Model Applications

Until fairly recently the development and application of the four-county GWMA groundwater model has focused on gaining region-wide understanding of past conditions, and of the impacts to groundwater of increasing development and demands on the resource over time. In the most recent report (GWMA, 2011), however, the groundwater model was specifically used to evaluate groundwater conditions on a subregional basis, with emphasis on four particular subregions referred to as the Odessa Sub-region; Moses Lake Sub-region; Royal Slope Sub-region; and Connell Sub-region. These evaluations emphasized sub-regional water budget calculations undertaken using the GWMA model, depicting likely rates of vertical groundwater exchange between major hydrostratigraphic units and horizontal exchange between subregions, in response to growing historic demands. These subregional budget analyses provide a framework of understanding for undertaking the municipal assessments described here.

Recent Updates to the GWMA Model

Development of the GWMA model has continued since the publication of the most recent GWMA groundwater modeling report (GWMA, 2011), as new data and information have become available that have refined the conceptual model and provided more accurate information for use in defining inputs to the groundwater model. These refinements of the numerical representation of groundwater conditions within the four counties of the GWMA focus on the following subject areas:

- Groundwater pumping
- Model stress periods
- Re-calibration

These refinements are detailed in the following subsections.

Groundwater Pumping

Groundwater pumping specified in the GWMA comprises pumping at agricultural wells for irrigation purposes; and pumping at municipal wells for supply purposes. Groundwater pumping for high-capacity agricultural wells was estimated with a 3-step process which included i) using space-borne images to define crop extent and historical growth, ii) using a surface energy balance approach to estimate crop-type irrigation demands, and iii) developing a mechanism to distribute computed water requirements to nearby wells. The use of space-borne spectral signatures to determine crop type and crop coverage is based on a method that has seen advances in resolution and accuracy in the last 25 years (Mulla, 2012), while the surface energy balance approach is similar to other regional-scale studies (Kahle et al., 2011; Senay et al., 2007) and field-based studies (Hunsaker and Royer, 2012). These steps are described in detail in the following sections.

Crop Classification

Landsat data were used to classify the study area by crop type (Figure 2) for summer crops for the period 2000 to 2003 in order to capture the general long-term crop mixture for the study area. This is a critical step - not often accounted for in other regional studies - because of the crop type, soil heterogeneity, and high water-vapor deficit in the area. For example, alfalfa may require up to 2.5-times the water that wheat does, even within the same general region. Landsat-ETM+, 30-meter resolution images were acquired for dates ranging between May 16, 2000 and June 10, 2003. For each crop season between two and five images were selected per season. Supervised classification techniques using areas of interest (AOI) were developed using ERDAS (ERDAS Inc., Atlanta, GA, USA.) with spectral bands 1-5, and 7 (blue: 450-520 nm, green: 520-600 nm, red: 630-690 nm, Near Infrared: 770-900 nm, Short-wave Red: 1,500-1750 nm, and shortwave Infrared 2,090-2350 nm). Classes generated from AOIs were evaluated using plots of the mean pixel values per spectral band, and histograms of band data values. Classification was completed for each region of the image using the signature file created for that region using a Maximum Likelihood decision rule.

Satellite data were also used to reconstruct historical crop expansion, and distinguish groundwater irrigated fields from non-irrigated fields for years between 1974 and 2010 for which

suitable data and images were available. It was assumed that 2000-2003 crop types obtained with the 6-band spectral signature was representative of the historical crop mix and general year-to-year crop rotation. Records of crop type dating back to the 1970's are not available publically, and the historical mix of crop types we obtained, based on 2000-2003 crop distribution, is believed to be a satisfactory based on independent understanding of the region's development, and personal interviews (Paul Stoker, pers. comm). Historical crop expansion and irrigated versus non-irrigated fractions were estimated using a ratio of the Normalized Difference Vegetation Index (NDVI) to precipitation (PPT) – i.e., NDVI/PPT. This process was repeated for each year from 1974 (when the necessary satellites were first launched) through 2010.

Simplified Surface Energy Balance

Calculations for crop irrigation and consumptive water use were made each season for each crop type using an energy balance approach that employed GIS thematic layers, together with the Food and Agriculture Organization (FAO) Penman-Montieth evapotranspiration rates derived using data from a series of agrometeorology stations, and irrigation estimates from the Washington State Irrigation Guide. The equation used to compute the monthly surface energy balance is as follows:

$$IR = ETa - PPT - SM$$

where

IR - *the amount of groundwater required*
ETa - *the estimated crop evapotranspiration demand*
PPT - *the precipitation*
SM - *the antecedent soil moisture*

The source and quality of input data is discussed in following sections. The approach used is not as detailed as smaller-scale studies (Hunsaker and Royer, 2012), and is not currently corroborated by eddy covariance data. The approach also rests upon several assumptions - most notably, the monthly mass-balance does not include deep percolation (groundwater recharge) or direct runoff. It is also assumed that irrigation efficiencies are 100%. These simplifying assumptions were used in the knowledge that it is unlikely that sufficient information will become available to refine these estimates for historic periods. Although some studies in the area have suggested that ground water recharge from irrigation may be significant in some areas (Kahle et al., 2011) evidence from water shortages and irrigation management-conservation practices - which have been widely employed to mitigate nitrate seepage into groundwater – suggest that recharge throughout most areas, particularly in those areas not supplied by surface water irrigation, is negligible.

Actual evapotranspiration estimates were made using a series of agro-meteorological stations available throughout the area (http://www.usbr.gov/pn/agrimet/etsummary.html?station=odsw&year=2009). AgriMet evapotranspiration summaries provide historical daily ET data for each crop grown in the vicinity of each AgriMet station using the FAO Penman-Monteith equation (Figure 3). Estimated ETa is available together with a reference ET (ETr) with either alfalfa or short-grass. Crop coefficients are available on a daily basis for most crops. Because field-based data for ETa are not always available at the spatio-temporal resolution required to interpolate values to a fine grid, this information was supplemented with irrigation estimates from the Washington Irrigation

Guide (WAIG; http://www.wa.nrcs.usda.gov/technical/ENG/irrigation_guide). Irrigation estimates using the WAIG are available in 13 separate micro-climates within the GWMA study area, which range in area from 497 km^2 to 4,398 km^2. Estimates from the WAIG include average long-term climate factors but importantly also include best management and best irrigation management practices, which may vary substantially from a water balance / irrigation-demand approach. The centroid of each microclimate zone was used for calculation of point-value ETa's based on a long term fractional relationship of crop ETa to climate data obtained from the field stations. The point-based ETa estimates were then interpolated to provide grid-based estimates of ETa.

Grids of precipitation and antecedent soil moisture (i.e., the PPT and SM portions of the monthly equations presented above) were constructed with available GIS thematic layers. Monthly precipitation was obtained from the Parameter-elevation Regressions on Independent Slopes Model (PRISM) climate group (http://www.prism.oregonstate.edu). Soil water holding capacity in the first 100 cm was obtained from a multilayer soil characteristic dataset for the conterminous United States (CONUS-SOIL; http://www.soilinfo.psu.edu). It was assumed that annual winter precipitation was sufficient to recharge upper soil layers to field capacity; the contribution of soil moisture to the seasonal water requirement was estimated as soil water (cm) at field capacity *multiplied by* maximum allowable depletion (MAD) for the specific crop type. For example, if MAD for potatoes is 30% before additional irritation is required, and the amount of water held in the soil is 12 cm at field capacity, then the annual contribution to that crop is 0.30 X 12 cm (3.6 cm). Importantly, however, the monthly change in soil moisture during the irrigation season was not computed: it was assumed that there is a single contribution of soil moisture at the beginning of the season. Although monthly precipitation input is factored in, it is historically low during the crop season while, conversely, the water vapor deficit is high. As a result, for the purposes of this assessment, it is assumed that crop acquisition of water held in the soil, beyond that provided by monthly precipitation and seasonal antecedent soil moisture, is negligible.

The aforementioned data and grid-based calculations were imported into ArcMAP and converted to GIS grids on a 30m resolution. Monthly budgets were computed using ArcGIS Model Builder extension together with custom Python scripts. Figure 4 depicts the resulting Evapotranspiration-based seasonal water requirement thematic map.

Validation of Crop Classification and Groundwater Withdrawal

Efforts were made to validate the crop classification process and results, and the demand-based computations of groundwater withdrawals. To evaluate the accuracy of remote sensing-based crop classification and overall groundwater requirements 3 analyses were completed:

- First, remote sensing data were validated using a ground reference and training/cross validation dataset. Training fields were used to develop the 6-band spectral signature, and validation fields were used to assess the accuracy of classified crop types. Crops in this dataset were identified in the same time period of a selected satellite image. The number of fields required as ground reference for satellite classification varied somewhat by crop, but included approximately 150 fields. Based on validation data, the crop classification approach was over 85% accurate in identifying crop types in irrigated fields, and over 90% accurate in identifying drylands.

- Second, to evaluate results in terms of the presence of general crop types, computed percentages of crop type were compared to a geo-database available from Washington State Department of Agriculture (WSDA). This information was available for 15,000 hectares subregion of the GWMA study area. Crop type is reported to WSDA on the basis of legal description (town, range, section). Overall crop percentages compared favorably with reported crop types from WSDA (Table 1). Table 1 includes dominant crop types and the number of fields reported from the WSDA, equivalent acreage, and percentages of estimated total crop type, and percentages reported by WSDA. Crop types reported are for 2009, when a fully functional geo-database was available for comparison. Across the 6 major crop types classified by remote sensing, the crop-type proportions were within 95% ± SD 4% of those reported by WSDA.
- Third, to validate irrigation estimates against observed field data, irrigation rate data were obtained from a private agricultural consulting company, ProAg Ltd located in Pasco, WA. This comprises data from irrigation gauges with data loggers representing 4,050 to 16,160 hectares for dominant crop types during 1987 to 2010. The computed average applied water per field was compared to the recorded data. Derived estimates for irrigation-based groundwater withdrawals compared well with ground-based data for most years, suggesting that groundwater irrigation estimates generally comport with field measurements, although there was a marginal difference between estimates for the years with very high precipitation.

Allocation to Nearby Agricultural Wells

To allocate groundwater requirements to wells in the nearby vicinity, a mechanism was required to spatially relate wells to fields. This was accomplished by associating each agricultural well with the acreage around it using Thiessen polygons. Thiessen (Voronoi) polygons - whose boundaries define the area that is closest to each point relative to all other points - define individual areas of influence around a set of points. The computed Thiessen polygons were grouped into larger clusters until a total area was obtained that had a meaningful climatic distinction. At that point, the total water requirement at each cluster was distributed across the wells in that area. The computed water requirement was then distributed proportionally to each well based on the total length of the open interval and well diameter, where this information was available. Figure 5 shows the location of the pumping wells and the range of annual pumping volume attributed.

Municipal Wells

Quantification of groundwater withdrawals from municipal wells was based on personal interviews with every major city in the GWMA area, and did not require an indirect method of estimation similar to that used to calculate withdrawal from agricultural wells. Interviews were conducted in 2011 and information relevant to total pumping, performance, well efficiency, and well construction was obtained for each well. Importantly, information on well abandonment and well deepenings, which is rarely recorded or reconciled in public record, was accounted for in the construction of the well pumping file for the GWMA groundwater model.

At the conclusion of these pumping data revisions 2,352 large diameter agricultural wells and 70 municipal supply wells were described in sufficient detail to be simulated in the GWMA model. Figure 6 presents in graphical form the groundwater demands that are calculated using the methods described above: these demands comprise the specified demands used as input to the GWMA groundwater model for the simulations described herein. Figure 7 presents an aerial depiction of the locations of groundwater pumping specified as input to the GWMA groundwater model, distinguishing agricultural (irrigation) and municipal extraction. It is evident from Figures 6 and 7 that pumping for agricultural uses outweighs pumping for municipal purposes.

As described below in the section "*Municipal Supply Projections - Calculation Approach*", post-processing of the groundwater model simulations is used to verify whether these specified demands are met in the GWMA model, and where any shortfalls (specified demands minus simulated yields) occur. This post-processing evaluation of gross versus net pumping provides an indication of the reliability of the GWMA model in simulating groundwater response to pumping and providing reliable future projections.

Model Stress Periods and Seasonal Pumping Distribution

In prior GWMA groundwater modeling assessments, the GWMA model has been used to simulate two periods: first, pre-development conditions, as required to obtain suitable initial conditions for simulating historic (development) conditions; and, second, historic (development) conditions, which span the period from about 1960 to 2010. No future (predictive) simulations have previously been made using the GWMA model.

For the municipal analyses described here, the GWMA model is used to simulate three periods: the first and second comprising pre-development and development conditions, as described above; and the third comprising "future" conditions spanning the period from 2011-2050. Assumptions used to project municipal and agricultural groundwater demands for the future simulations are detailed in the section "*Municipal Supply Projections - Calculation Approach*", below.

In pervious simulations using the GWMA groundwater model, rates input to the model – such as groundwater pumping, and recharge – were specified on an annual-average basis, and the model executed using annual stress periods. This approach is suitable when evaluating long-term patterns and trends in regional or subregional groundwater budgets. However, when evaluating water budgets in more detail – and particularly when evaluating the likely future sustainability of pumping in small areas and/or from small numbers of wells – it becomes critical to acknowledge and explicitly simulate within-year time-varying (seasonal) patterns of groundwater pumping since these dynamics in groundwater usage can be the determinant as to whether peak demands are likely to be met by the declining resources.

To represent seasonality in groundwater usage, each simulated calendar year – from 1960 through to 2050 – was divided into 3 stress periods as follows:

1. The first stress period, spanning January 1st through May 31st.
2. The second stress period, spanning June 1st through August 30th.
3. The third stress period, spanning September 1st through December 31st.

For municipal wells, one quarter (25%) of the estimated annual pumpage is allocated to the first and third stress periods (i.e., 12.5% in each stress period), and three quarters (75%) is

allocated to the second stress period; whereas, for agricultural wells 5% of the estimated annual pumpage is allocated to the first and third stress periods (i.e., 2.5% in each stress period), and 95% is allocated to the second stress period – the latter reflecting the timing of peak irrigation demands. Although this allocation of pumping between the three stress periods is approximate, it broadly reflects the relative demand patterns for municipal and agricultural wells throughout a calendar year. Refinements to the demand patterns for both municipal and agricultural wells will be made in future analyses.

Re-Calibration

The updates to groundwater pumping and to the discretization of stress periods in the GWMA groundwater model necessitate a re-assessment of the calibration of the model, and of the values of the input parameters. As discussed in GWMA (2011), calibration is an iterative process where early efforts provide inference on the model assumptions, structure and inputs as well as the likely values of parameters. Quantitative (objective function based) calibration may occur following several qualitative iterations. Calibration of the Watershed and GWMA models combines qualitative and quantitative measures, and is corroborated using measured data and qualitative independent information. Measured data used to calibrate the Watershed and GWMA models comprise the following:

- *Pre-development conditions:* groundwater levels measured prior to, or soon after, extensive groundwater development occurred provide a quasi-steady-state "snap-shot" of the water levels and gradients before major development occurred. These data are used to construct a simple scatter plot depicting the correspondence of simulated and measured values.
- *Development conditions:* groundwater levels measured since commencement of extensive groundwater development reflect the impacts of large-scale groundwater development. These data are used to construct well-specific hydrographs representing transient conditions with which the simulated values are compared.

Relatively limited changes to the model parameterization were made as a result of the changes in model inputs. Specifically, changes in the specified groundwater pumping described earlier, resulted in changes in the simulated groundwater response over time to increased development. This, together with review of the previous subregional budget analyses described in GWMA (2011) resulted in the following revisions to model parameters:

- Horizontal hydraulic conductivity in selected units – changes in parameter values from previous simulations were relatively small, and focused on those units representing the base of the Wannapum / top of Grande Ronde units (Table 2).
- Increased vertical anisotropy in selected units – principally, those units representing the base of the Wannapum / top of Grande Ronde units. This reflects qualitative information regarding the vertical compartmentalization of deep, discrete, aquifer units and the evidence for very limited communication between these units.
- Increased recharge – net deep percolation from precipitation was increased by a factor of 1.5. This increase principally reflects qualitative understanding that groundwater recharge

rates were greater in times past than currently, and greater than expected in the future. Groundwater elevations simulated using the pre-development model are sensitive to recharge rates; however, historic and future rates of change in response to groundwater demands are relatively insensitive to recharge rates within reasonable limits.

- Increased storativity – values for water table storage (specific yield) and specific storage were increased. These increases were invoked to provide reasonable correspondence between measured and simulated groundwater level declines throughout the development period, in response to the revised groundwater pumpage data.
- Horizontal barrier resistance – values for the resistance of some horizontal barriers, representing the presence and effect of faults and other lineaments on groundwater flow, were changed to bring closer agreement between measured and simulated head differences across those features.

Current values for hydraulic parameters of the GWMA groundwater model are listed in Table 2. Figure 8 presents a scatter plot comparing measured and simulated groundwater elevations as calculated using data considered to reasonably represent pre-development conditions. Although the scatter plot is reasonably encouraging, suggesting that the general pattern of pre-development groundwater levels is well matched, of most interest to the future projections that are the subject of this report is the correspondence between simulated and observed rates of decline over time since the predictive model is being used to project likely rates of decline over time.

Figure 9 presents simulated and measured hydrographs for four example wells within the GWMA model domain. Though not comprehensive, these representative example hydrographs indicate that the model reasonably matches the rates of decline in groundwater levels in unpumped wells. There are some notable exceptions to this pattern which result from known structural shortcomings in the GWMA model that are as a result the subject of further planned model refinements.

Municipal Supply Projections - Calculation Approach

Supply projections were made for thirty-five (35) municipalities throughout the GWMA area. These are listed in Table 3, and illustrated in Figure 10. In each case, groundwater pumping and corresponding groundwater elevation changes were evaluated within a radius of about 6 miles from the center of the municipality, providing information proximal to the municipality.

Reliable simulation of the likely declines in groundwater levels and corresponding well yields in response to future demands rests upon the following:

- *Realistic representation of the effects of pumping:* This includes regional effects of pumping – principally, declining regional groundwater levels and the effect these declines have on resource availability over broad areas; plus, the effects of pumping that manifest within the pumped well itself and that lead to well-specific capacity constraints, particularly during periods of intensive pumping. The method employed to realistically represent the effects of groundwater pumping both regionally and locally is described in this subsection.
- *Validation of the simulation approach:* This comprises comparing model outputs with available data over a period of historic record that depicts conditions similar to those expected during the predictive period. This is described in the later subsection "*Validation to Historic Field Data*".
- *Reasonable projections of likely future demands:* The source(s) of the future demand rates used in the predictive GWMA model simulations, and any assumptions used in developing these projected demand rates, are described in the later subsection "*Future Demand Projections*".

Representation of Pumping

Version 2 of the MODFLOW Multi-Node Well (MNW2) package was used (Konikow et al., 2009) to represent the regional and local effects of pumping. Previous reports describing the GWMA groundwater flow model (e.g., GWMA, 2011) describe the benefit of using the MNW2 package to represent pumping to automatically allocate withdrawals from multiple water-bearing units for wells with long open intervals. However, for the purpose of evaluating the sustainability of pumping at individual wells or small groups of wells, the MNW2 package also has the capability of representing (a) the efficiency of a pumped well in terms of the head losses that occur between the aquifer immediately adjacent to the well, and the head within the annulus of the well; and, (b) reductions in well capacity and ultimately net well yield, due to a combination of well-specific inefficiency and declines in the transmissive capacity of the aquifer.

With regard to well efficiency – pumped wells are not perfectly efficient. Well efficiency is described by Rorabaugh (1953) as "*the ratio of (1) the theoretical drawdown computed by assuming that a logarithmic distribution of head is applicable all the way to the well face (in other words, no turbulence is present) to (2) the drawdown in the well.*" Hence, well losses are caused by the effects of laminar flow within the aquifer, plus turbulent head losses across the face of the well and within the well casing (see for example, Jacob 1946; 1947 and Rorabaugh, 1953). Put simply, the drawdown within the well annulus is greater than the drawdown in the

aquifer adjacent to the well open interval, and the magnitude of this difference is an indicator of the efficiency of the well. Specific causes of well inefficiency can include:

- Overall well design – factors that contribute to under-sizing of a well for its intended yield include use of too short an open interval; too narrow a diameter; too fine a filter pack; and/or too small of a screen open area; partial penetration of the aquifer by the open interval.
- Poor open-interval design – such as the use of an uncased well in the presence of sanding; or the use of a filter pack and/or screen section(s) incompatible with targeted well yields.
- Incomplete or ineffective well development – for example, incomplete recovery of invaded mud during mud-rotary drilling.
- Other sources of physical, chemical, and/or biological fouling.

The head calculated by the basic MODFLOW program for the center of each finite-different cell is actually a cell-averaged value. This simulated head does not accurately represent the head within the formation immediately adjacent to the well, because of the approximately logarithmic cone of depression that is centered on the pumped well; furthermore, it does not accurately represent the head within the well itself, because causes of well inefficiency are neglected. To overcome this limitation and compute a more representative head for a pumped well within a finite-difference cell, the MODFLOW MNW2 package implements a general well-loss equation of the form:

$$h_{well} = h_n + AQ_n + BQ_n + CQ_n^p$$

where h_{well} is the composite head (or water level) within the well itself; *n* is the index of the cells (or, more accurately the nodes) that are intercepted by the multi-node well; h_n is the computed head in the nth cell associated with the well;, Q_n is the flow between the nth model cell and the well; A is a linear aquifer-loss coefficient; B is a linear well-loss coefficient; C is a nonlinear well-loss coefficient, and P is the power (exponent) of the nonlinear well-loss component. Coefficient B can be used directly to represent well efficiency and in MNW2 is calculated using the "Skin" coefficient as follows:

$$Skin = \frac{K_h B}{K_{SKIN} b_w} - 1 \quad ln \quad \frac{r_{SKIN}}{r_w}$$

where B is the saturated thickness of the cell; b_w is the saturated length of the well open interval in the cell; K_h is the effective horizontal hydraulic conductivity of the cell; r_{SKIN} is the radius to the outer limit of the skin; and, K_{SKIN} is the hydraulic conductivity of the skin.

Without detailed well-specific assessment, it is not possible to determine the exact magnitude or the causes of well-specific inefficiencies. Unfortunately, the information necessary to make such a detailed evaluation is likely unavailable for the majority of municipalities evaluated. As a result, for the evaluations presented in this report, a generic approach was taken to constructing the MNW2 package based upon trial-and-error variations in the value of the K_{SKIN} parameter until correspondence was reached between simulated well efficiencies, limited field data available for verification, and qualitative information on both long-term and seasonal well performance. At the conclusion of these iterations, the value of the C coefficient (i.e.,

nonlinear loses) was assumed negligible for simplicity; the value of K_{SKIN} was set equal to 20% of the transmissivity-weighted average horizontal conductivity of the cells each well intercepts; and r_{SKIN} was set equal to twice the well radius.

With regard to declines in well yield over time – there are many factors that can lead to such declines. These range from changes in regional conditions, such as declining groundwater levels, which result in a less transmissive formation; to declines in well-specific efficiency, which result in reduced specific capacity and hence greater in-well drawdown for equivalent yields; to the encroachment upon, or exceedance of, practical limitations on groundwater recovery. Foremost among the practical limitations is the lift that can be practically sustained and/or economically justified. The total lift includes the pumping lift (i.e., depth from the pump head to the pumped water level in the well), and sources of back-pressure downstream of the pump head. Factors that determine what lift is economically justifiable include the capitol cost of well replacement or obtaining other water sources, and the profit margin and viability of the intended water use (e.g., irrigated crop in the case of agriculture). For purposes of this report, the focus is on the practical maximum pumping lift, and this value is equal to 900 feet. Put simply, when the water level within a pumped well reaches a depth of 900 feet below the pump head, the rate of extraction is reduced until this rate can be maintained, or pumping ceases until the well recovers sufficiently to draw water again. (For simplicity, the pump head elevation is assumed to equal ground surface elevation.)

The MODFLOW MNW2 is capable of reducing the discharge from a pumped well when the water level within the pumped well drops below a specified depth. This is accomplished by setting the value of the "Qlimit" term in the MNW2 package input file to a value greater than zero, and setting the value of the "Hlim" term to desired depth. For purposes of this report, the value of Hlim was set to 900 feet below ground surface.

Hence, use of the MODFLOW MNW2 package enables the GWMA model to represent several features that combine to limit the sustainable yield of pumped wells over time – including declining regional groundwater levels, declining well capacities, and encroachment on practical groundwater recovery limitations. The schematic of a pumped well that is depicted in Figure 11 illustrates several important features and events in the life-cycle of a well that is pumping in an area of declining resource availability. Not all features depicted are directly relevant to every municipal well simulated in the GWMA model.

The hypothetical well depicted in Figure 11 is constructed within an aquifer that exhibits a total thickness exceeding 900 feet. Prior to pumping, the static groundwater elevation is found at position zero (identified by the "0" on Figure 11), and the open interval of the well is a considerable distance below the water table. The following stages in the lifecycle of the well are then depicted:

1. Early pumping results in drawdown that remains above the open-interval of the well, and a considerable distance above the pump intake, even during periods of high demand. After some time, the regional water table exhibits noticeable but not large declines (Position "1"). Limitations on well efficiency and capacity are primarily a result of the design of the well open interval (i.e., screen, filter pack, well development, etc.).
2. Continued pumping regionally and at the hypothetical well, specifically, result in declining regional groundwater levels, and increased drawdown at the hypothetical well,

to the extent that the pumped water level in the hypothetical well may occasionally fall below the top of the open interval (Position "2"). Limitations on well efficiency and capacity are a result of the design of the well open interval; the result of cascading water within the well; and the result of reductions in the aquifer transmissive capacity.

3. Continued pumping regionally and at the hypothetical well, specifically, continue to increase regional water level declines and drawdown at the hypothetical well, to the extent that the pumped water level in the hypothetical well is always below the top of the open interval (Position "3") and occasionally approaches the elevation of the pump intake. Limitations on well efficiency and capacity are similar to those for Position "2": however, the well operator may consider dropping the pump intake as a mitigating action.
4. Continued pumping regionally and at the hypothetical well, specifically, have reduced the regional and pumped water levels to such an extent that the pumped water level in the hypothetical well is always within the open interval (Position "4") and at peak demand times always reaches the elevation of the pump intake, resulting in damage to the pump and loss of the well for periods of time. Since the pump intake has been dropped close to its maximum depth, the only option is to deepen the well, or replace the well with an entirely new and deeper well. However, if the pump intake is already at a depth approaching the practical pumping lift limit (in this case, 900 feet) this may not be a viable option and the resource may be considered to be – for practical purposes – exhausted in the immediate area.

An important complication to this simplified schematic is that within the stratified and vertically compartmentalized basalt aquifer system encountered within the GWMA, well deepening may encounter a new basalt interflow zone containing an aquifer that possesses a higher head than the overlying inflow zone aquifer from which the well was previously pumping. Thus, the life of the well may be extended until such time as the pumped head in the well again reaches an unsustainable depth, and the cycle is repeated. Although this benefit of well deepening is not depicted in Figure 11, this feature can be simulated using the GWMA groundwater flow model, and has been exploited in the GWMA for many years to continue the development of groundwater resources.

Although the MNW2 package is not capable of *explicitly* simulating all of the features described above, empirical parameterization of the MNW2 package can pumped-well hydrographs that reflect these features in the life-cycle of a pumped well. Hence, when simulating the life-cycle of a pumped well in the current GWMA model, a "demand" pumping rate is specified as input to the MODFLOW MNW2 package, together with parameters that define the empirical effect of well efficiency and a practical pumping lift depth. The simulation using the MNW2 package then produces outputs that include the head calculated within the pumped well, and the net groundwater extraction rate from the well. The difference between the net groundwater extraction rate at the well, and the demand specified as input, comprises the projected shortfall. This information can be plotted to verify the historic period of simulation using field data, and evaluate the likely future performance of the well. One such plot is depicted in Figure 12.

Figure 12 is a demonstrative graphic of projected supply for municipal well: the figure is annotated with certain key features in the hydraulic response and projected yield of the well that correspond with the life-cycle narrative provided above and depicted in Figure 11. This graphic portrayal is based on an actual simulated projection from the model: though it is only one of many such projections, it represents the major features and concepts.

The surface elevation at the location of the well (approximately corresponding to the pump head) is at an elevation of a little over 1,300 feet: as a result, the dashed line corresponding with a maximum pumping lift of 900 feet lies at an elevation of a little over 400 feet above sea level. The blue oscillating line represents the average water level calculated by the GWMA model for the model cell(s) intercepted by the well: given the size of the model cells, this can be broadly interpreted as representing the regional groundwater at some distance from the pumped well. The oscillations in this line are the result of pumping at this well and also other wells; and the long-term gradual decline reflects the declining regional groundwater levels. The high peaks in this line represent the regional static groundwater level in the aquifer: for this reason, this line is referred to as the static water level (this line also shows troughs that correspond with peak pumping season). Note that even though the peak groundwater pumping occurs during the summer, the regional static level continues to decline in to the future as a result of the sustained effects of pumping from which the aquifer never fully recovers.

The orange oscillating line represents the water level calculated by the GWMA model for the well itself. While acknowledging the approximate empirical approach used to specifying well efficiency in the GWMA model, this line can be interpreted as a best-estimate of the likely water level in the annulus of the well whether or not it is pumping. The oscillations in this line are overwhelmingly the result of pumping at this well; and the long-term gradual decline reflects the declining regional groundwater levels in addition to the inability of this well to recover to pre-pumping levels. The low troughs in this line represent the water level in the well during the peak pumping season: for this reason, this line is referred to as the dynamic water level (this line also shows peaks corresponding with periods of much lower pumping). The following features can be seen in this graphic:

The rate of demand from the time of the well construction through to the current time (2011) is assumed constant at about 800 acre-feet per year (AFY) (purple dots). The in-well water level "trough" during peak pumping (or, dynamic level) is nearly 600 feet lower than the in-well water level peak that occurs during the off-season: however, the water level in the well recovers in the off-season to a level close to regional groundwater levels. Until 2017 the demand (purple dots) is met by the well (yellow line), despite large peak-season drawdowns in the well. Current (Period 1) rates of decline of the regional "static" water level and of the off-season water level in the well are fairly steady and not very dissimilar.

From the year 2011 onward, the rate of demand is assumed to increase steadily each year by a small but constant factor. This increase results in a steadily increasing difference between peak-season and off-season in-well water levels. On or about the year 2017, the peak-season in-well water level reaches the elevation corresponding with the maximum practical pumping lift of 900 feet. This marks a point of departure from which point forward:

- The steadily increasing demand (purple dots) cannot be met by the well (yellow line), causing a shortfall, because the well is either occasionally inoperative or must be operated at reduced rates due to the very large drawdown.

- Because the well can no longer recover fully, the rate of decline of water levels in the well accelerates to such an extent that this rate is substantially greater than the rate of decline in the regional water levels.
- As a result, the shortfall increases with time as a combined result of continued regional water level declines, and the limitations imposed on pumping by the maximum pumping lift.

Figure 12 illustrates how a pumping well can fail during peak demand periods because of the dynamic drawdown when the pump is turned on; and how a well can have a substantial water column in the well annulus when the pump is not running, but is unable to sustain the required demand when the pump is turned on.

Validation to Historic Field Data

Although the best available simulation methods have been used to represent the combined regional and well-specific effects of pumping on the long-term sustainability of pumping, it is appropriate to verify that the simulations can reproduce historic field data where such are available. Of the 35 municipalities evaluated, a large database of water level data is available to verify model calculations at one municipality (Moses Lake), and some water level data are available to verify model calculations at six municipalities (Connell, Davenport, Lind, Odessa, Othello, and Ritzville). At the present time, no water level data are available to verify model calculations at the remaining municipalities.

Figure 13 depicts two examples from the Moses Lake municipal supply system, wells GR1938 and GR6141, respectively. In each example, a suite of simulation inputs and outputs analogous to that described above for Figure 12 is depicted. However, also shown on the top graph of each figure are water levels historically measured in each corresponding well. Review of each graphic suggests the following:

- The model reproduces the general pattern of water level changes in each well reasonably well, reflecting the change in water levels between the high and low pumping seasons, and the general decline in water levels throughout the historic record.
- There is a tendency for the model to over-predict the off-season (low pumping) water level and under-predict the drop in water levels during the high pumping season. The first issue can be remedied via refinements in the local model calibration, whereas the second issue can be remedied using well-specific efficiency calculations that reflect individual well performance.
- The model projections suggest that the difference between high-pumping and low-pumping water levels will steadily increase in the future, particularly as the pumped water level is drawn down in to the open interval of the well, impacting the well efficiency.
- The differences between the simulated drawdown in the pumped well itself, and the historic data, is expected to differ between individual wells since the efficiency of the wells is expected to vary, whereas the GWMA model currently uses a “typical” efficiency to represent all wells.

Overall, while the model reflects the general patterns, as presently constructed (i.e., without explicit calibration to historic data such as depicted in Figure 13) the model provides rather optimistic projections of the likely future sustainability of pumping, since the actual measured data suggest water levels are already lower than the modeled values. It can therefore be reasonably surmised that the actual future well performance will be worse than that which is currently projected by the GWMA model. For this reason, until such time as more information is available to calibrate the GWMA model to historic municipal data, the GWMA model simulations are used in this report to indicate the expected *relative* increases in the rate-of-decline of water levels in each municipality rather than the *absolute* values of groundwater and in-well elevation: this is combined with the historic elevation data (where available) to infer the likely sustainability of the municipal supply.

Future Demand Projections

As described earlier, for the municipal analyses the GWMA model simulates three periods: the first and second comprising pre-development and development conditions, respectively; and the third comprising future conditions spanning the period from 2011-2050. Pumping rates for the historical period were estimated using methods explained in previous paragraphs, while for future conditions, an estimate of likely future demands is required.

Figure 14 depicts the historic demands used in the GWMA model, together with the projected demands calculated using a 2% escalation for municipal demands and zero escalation for agricultural demands. Note that because the agricultural pumping overwhelms the municipal pumping currently, the 2% escalation for the municipal demand represents a much smaller fraction of the total demand – however, the effect of agricultural pumping on regional groundwater level declines and hence that contribution to the long term sustainability of municipal supplies is represented by the GWMA model.

Results

A brief overview of the simulation results is provided here: detailed assessments are provided in the municipality-specific report sections. When reviewing the results of the simulations, it is important to remember that each well operates within a regional context, and that the performance of each well is a function of regional conditions as well as local and well-specific conditions. For this reason the results of the simulations are described in terms of region-wide projected shortfalls – i.e., the projected inability of the regional aquifer system as a whole to meet the increasing demands for resources; plus, more location- and well-specific controls on municipal resource availability.

Projected Water Level Declines

For each of the municipalities evaluated, a suite of graphics similar to those presented as Figures 12 and 13 was produced that depicts simulated aquifer and in-well water levels, and actual yields, based on historical demands. As indicated above, of the 35 municipalities evaluated, data were only available for seven to verify model calculations. Therefore, as described earlier, at this point in time the GWMA model simulations are used in this report to indicate the expected *relative* increases in the rate-of-decline of water levels in each municipality, and this is combined with the historic data (where available) and independent information to infer the likely sustainability of the municipal supply.

The results of the simulations are condensed in to the following summary statistics, which are used in the main body of this report and in the individual municipal summaries to support projections of the likely future reliability of each municipality's resources:

- Current Time, and Late Time, simulated rate of decline in the aquifer (regional) unpumped groundwater levels – referred to as the "Static Decline".
- Current Time, and Late Time, simulated rate of decline in the in-well water levels – referred to as the "Dynamic Decline".
- The average, median, and ninetieth percentile (90th%tile) summary statistics for each of the Current Time and Late Time Static and Dynamic declines.

Note that the "Dynamic" declines are actually calculated using the peaks of the in-well water levels rather than the troughs: while the troughs are more representative of the actual dynamic declines, at late time for the majority of wells the troughs exceed the depth of either the 900 foot maximum pumping lift and/or the bottom of the open interval of the well, which artificially flattens the slope of the troughs. This renders those trends meaningless. Therefore, the peaks of the in-well hydrographs are used as the best approximation to the dynamic declines throughout the period of the simulations.

Table 4 lists the Current Time and Late Time static and dynamic water level declines for each well evaluated in this study, and the corresponding time period for which the calculations apply. Figure 16 plots these tabulated values as two separate data series on a single scatter diagram: the first series representing simulated Recent Time and Late Time static water level declines, and the second series representing simulated Recent Time and Late Time dynamic water level declines. Also shown is a line of equal correspondence: points falling on this line show similar Current Time and Late Time rates of decline; points falling above this line show

smaller Late Time rates of decline than Current Time rates of decline; and points falling below this line show larger Late Time rates of decline than Current Time rates of decline.

The following features are evident from review of Figure 16:

- Current Time and Late Time static rates of decline broadly cluster about the line of equal correspondence. This suggests that some static rates of decline may increase, while others may decrease. Since regional groundwater extraction is dominated by agricultural pumping, this indicates that if current rates of agricultural pumping are not increased, the rates of decline in regional groundwater levels will remain fairly steady – although continuing to irreversibly decline due to the lack of aquifer replenishment.
- The majority of Current Time and Late Time dynamic rates of decline lie below the line of equal correspondence. This suggests that the majority of municipal wells will experience accelerated rates of decline in their in-well water levels over time, in response to (a) the continued regional declines that are dominated by agricultural pumping, and (b) the increased demands made for municipal supplies. Some municipal wells are projected to experience future rates of decline that are more than three times greater than current rates of decline.

Table 5 condenses the individual water-level declines listed in Table 4 and plotted in Figure 16 into model-wide summary statistics. When considered together with Figure 15, which depicts the projected shortfall (i.e., demand minus yield), the summary statistics provided in Table 5 corroborate the depiction presented in Figure 16. That is, Current Time and Late Time rates of decline in static (regional) water levels may not change dramatically, due to (a) the assumption of constant rather than increasing municipal supplies plus (b) the increasing failure over time of wells to meet their demands (i.e., increasing shortfalls over time). While this alone is disconcerting, the Current Time and Late Time rates of decline in the in-well water levels is expected to nearly double (on average), as pumped water levels enter the well open interval and approach or occasionally equal the maximum pumping lift depth and/or the bottom of the well open interval. Hence, an increasing number of municipal wells can be expected to reach their maximum sustainable yields in the foreseeable future, and to require either deepening, well replacement, or an alternative source of supply.

References

Bedekar, V., Niswonger, R. G., Kipp, K., Panday, S. and Tonkin, M., 2011, Approaches to the simulation of unconfined flow and perched groundwater flow in MODFLOW, Ground Water, v. 49: no. doi: 10.1111/j.1745-6584.2011.00829.x

Doherty, 2010, PEST Model-Independent Parameter Estimation: User Manual, 5th Edition (Published in 2005 with Revisions in 2010), Watermark Numerical Computing, Corinda, Australia.

GWMA, 2010a, *Groundwater Model Development Process for the Columbia Basin Ground Water Management Area of Adams, Franklin, Grant, and Lincoln Counties, Washington: Progress Report of the Groundwater Hydrologic Modeling Project.* Consultant report prepared for the Columbia Basin Ground Water Management Area of Adams, Franklin, Grant, and Lincoln Counties, Washington, prepared by GSI Water Solutions, Inc., and S.S. Papadopulos & Associates, Inc., September 2010.

GWMA, 2010b, *Columbia Basin Ground Water Management Area Hydrologic Groundwater Modeling Project: Interim Report*. Consultant report prepared for the Columbia Basin Ground Water Management Area of Adams, Franklin, Grant, and Lincoln Counties, Washington, prepared by GSI Water Solutions, Inc., and S.S. Papadopulos & Associates, Inc., December, 2010.

GWMA, 2011, *Groundwater flow model of the Columbia Basin Ground Water Management Area of Adams, Franklin, Grant, and Lincoln Counties: Model development, calibration, and application to evaluate groundwater supplies in four sub-regions.* Consultant report prepared for the Columbia Basin Ground Water Management Area of Adams, Franklin, Grant, and Lincoln Counties, Washington, prepared by GSI Water Solutions, Inc., and S.S. Papadopulos & Associates, Inc., June 2011.

Halford, K.J. and Hanson, R.T., 2002, User guide for the drawdown- limited, multi-node well (MNW) package for the U.S. Geological Survey's modular three-dimensional finite-difference ground-water flow model, versions MODFLOW-96 and MODFLOW-2000: U.S. Geological Survey Open-File Report 02-293, 33 p.

Harbaugh, A. W., E. R. Banta, M. C. Hill, and M. G. McDonald, 2000, MODFLOW 2000, The U.S. Geological Survey Modular Ground-Water Model – User Guide to Modularization Concepts and the Ground-Water Flow Process, Open-File Report 00-92, U.S. Geological Survey, Reston, Virginia. http://water.usgs.gov/nrp/gwsoftware/modflow2000/ofr00-92.pdf

Hsieh, P.A., and Freckleton, J.R., 1993, Documentation of a computer program to simulate horizontal flow barriers using the U.S. Geological Survey's modular three-dimensional finite-difference groundwater flow model: U.S. Geological Survey Open-File Report 92-477, 32 p.

Hunsaker, D., and Royer P. D., 2012. Irrigation scheduling decision report for field-scale, surface irrigation using remote sensing and ground-based data. Remote Sensing and Hydrology. IAHS Publ 352, 2012

Jacob, C.E., 1946, Drawdown test to determine effective radius of artesian well. Proc. Am. Soc. Vicil Engineers, v72, no. 5, pp. 629-646.

Jacob, C.E., 1947, Drawdown test to determine effective radius of artesian well, with discussion by Boulton, Rohwer, Leggette, Lewis and C.E. Jacob. Trans. Am. Soc. Civil Engineers, v.112, Paper #2311, pp. 1040-1070.

Kahle, S.C., Morgan, D.S., Welch, D. M. and others. 2011, Hydrogeologic Framework and hydrologic Budget Components of the Columbia Plateau Regional Aquifer System, Washington, Oregon, and Idaho 2011-5124, 12 p., available at http://pubs.usgs.gov/sir/2011/5124/

Konikow, L.F., Hornberger, G.Z., Halford, K.J., and Hanson, R.T., 2009, Revised multi-node well (MNW2) package for MODFLOW ground-water flow model: U.S. Geological Survey Techniques and Methods 6–A30, 67 p.

Mulla, D. J. 2012, Twenty five years of remote sensing in precision agriculture: Key advances and remaining knowledge gaps, Biosystems Engineering, Available online 13 September 2012, ISSN 1537-5110, 10.1016/j.biosystemseng.2012.08.009.

Neville, C., and Tonkin, M., 2004, Modeling multiaquifer wells with MODFLOW: Ground Water, v. 42, no. 6, p. 910-919.

Niswonger, R.G., and Prudic, D.E., 2006, Documentation of the Streamflow-Routing (SFR2) package to include unsaturated flow beneath streams – a modification to SFR1: U.S. Geological Survey Techniques and Methods 6–A13, Version 1.10, 48 p.

Niswonger, R.G., S. Panday, and Ibaraki, M., 2011, MODFLOW-NWT, A Newton formulation for MODFLOW-2005: U.S. Geological Survey Techniques and Methods 6–A37, 44 p.

Prudic, D.E., Konikow, L.F., and Banta, E.R., 2004, A new streamflow-routing (SFR1) package to simulate stream-aquifer interaction with MODFLOW-2000: U.S. Geological Survey Open-File Report 2004-1042, 95 p.

Rorabaugh, M. I., 1953, Geographical and theoretical analysis of step-drawdown tests of artesian wells. Proc. Am. Soc. Civil Engineers, Hyd. Div., v79, no. 1, pp. 362.1-323.23.

Senay, G.B., Budde, M., Verdin, J.P., and Assefa M. Melesse. A coupled remote sensing and simplifieedd surface energy budget approach to estimate actual evapotranspiration on irrigated fields. 2007, Sensors, 7, p. 979-1000

Snyder, D.T., and Haynes, J.V., 2010, Groundwater conditions during 2009 and changes in groundwater levels from 1984 to 2009, Columbia Plateau regional aquifer system, Washington, Oregon, and Idaho: U.S. Geological Survey Scientific Investigations Report 2010-5040, 12 p., available at http://pubs.usgs.gov/sir/2010/5040/

Figures

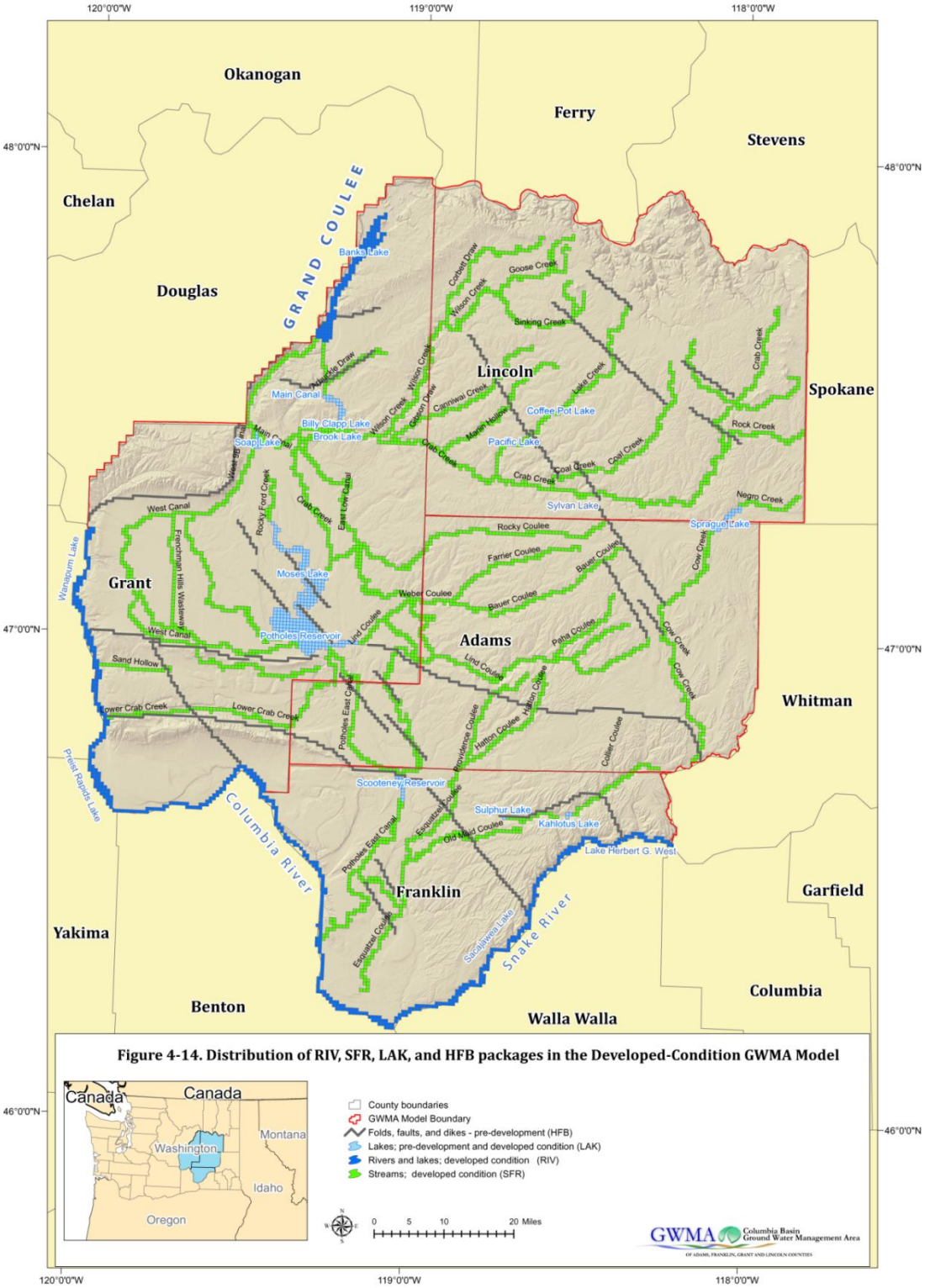

Figure 1 GWMA Model Extents and Boundaries

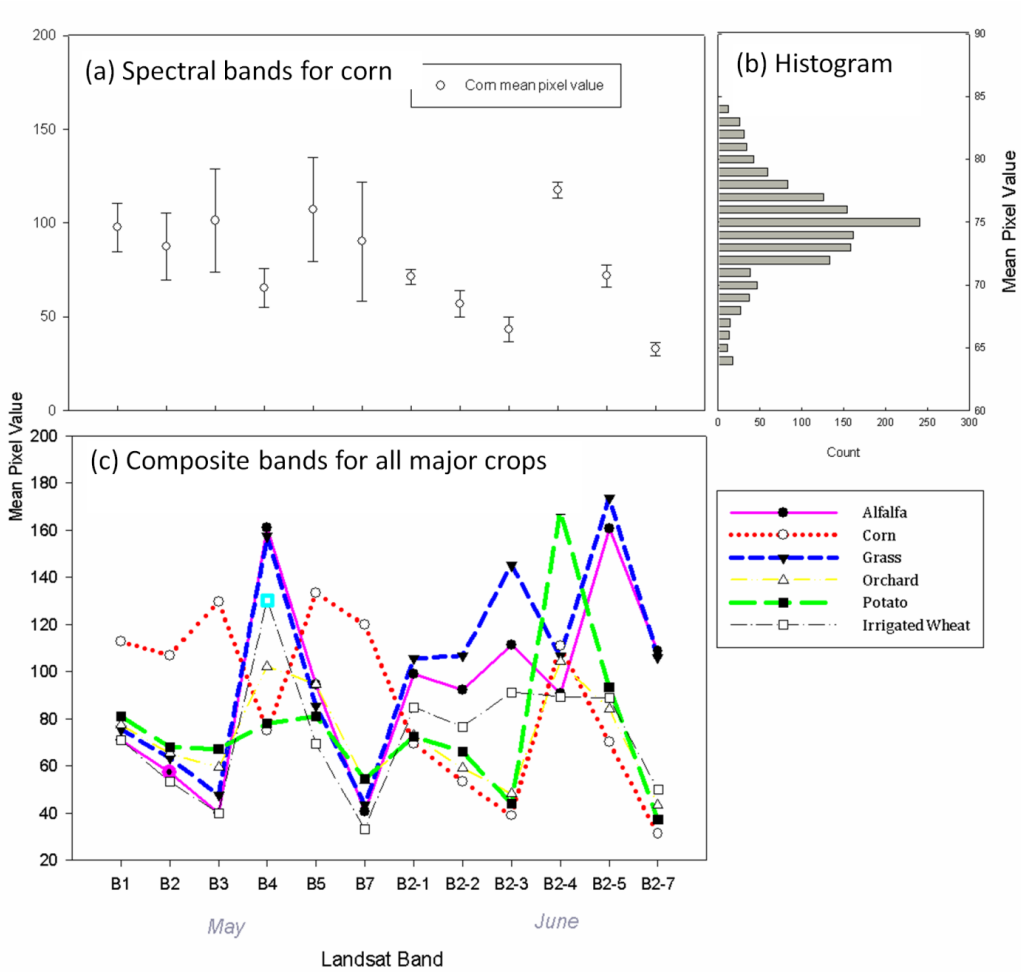

Note: Remote sensing evaluation by crop type for 6 spectral band signature showing mean pixel values and variation (y-axis) and the corresponding Landsat band number on the x-axis for May (B1 to B6, and B7) and June for corn (B2-1 to B2-6, and B2-7). Mean (open circles) and SD (error bars) shown for corn illustrate seasonal variance and compare the range of data observed in May and June (a). Histogram for pixel values from Landsat spectral band characterize data distribution for band 4 (770-900 nm; b). Mean values for spectral means for all crop types that were classified and mapped throughout the study area (c).

Figure 2 Landsat-based spectral reflectance delineation by crop type

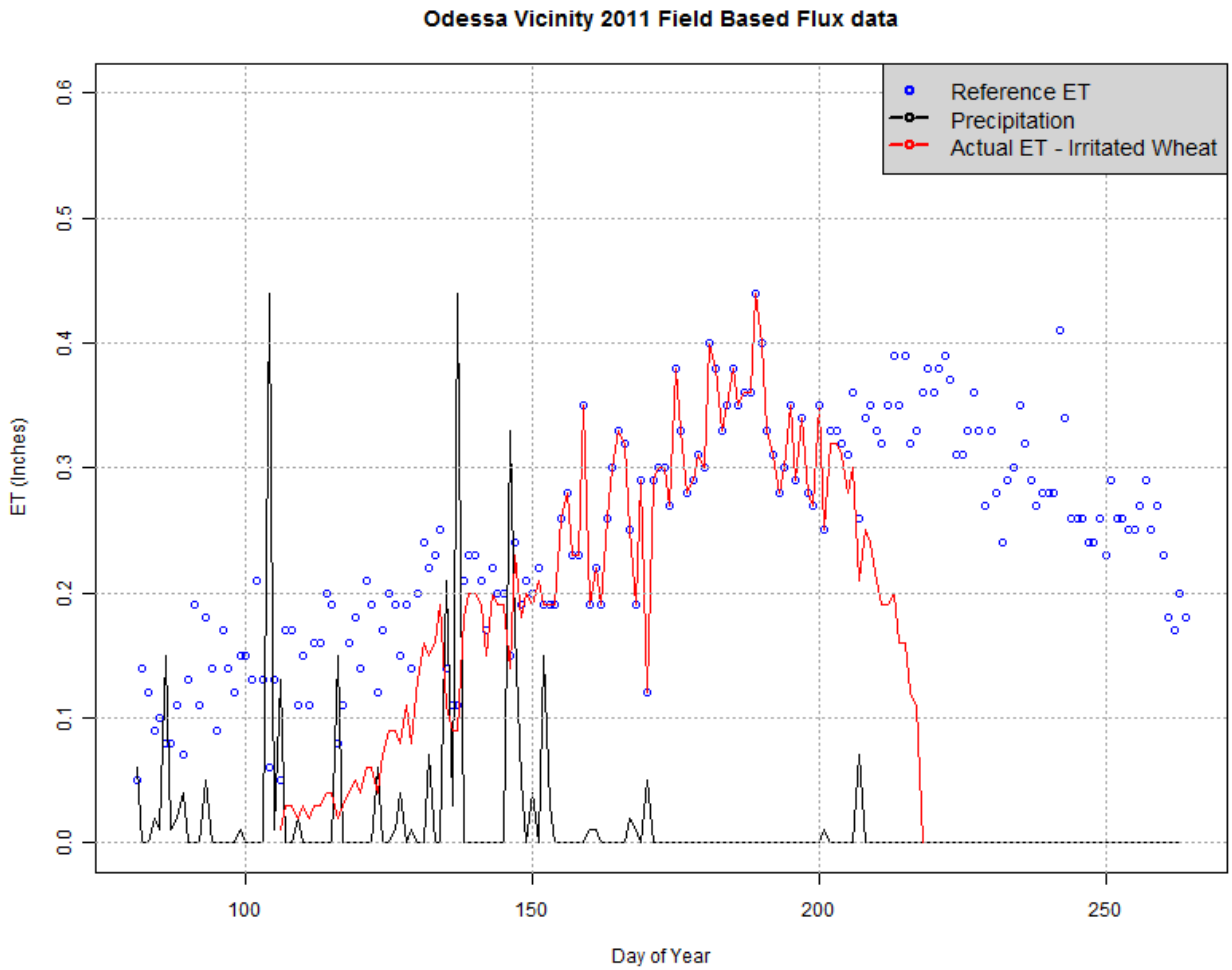

Source: http://www.usbr.gov/pn/agrimet/etsummary.html?station=odsw&year=2009.

Note: This figure depicts crop reference ET, precipitation, and actual irrigation for wheat using as estimated using a wheat crop coefficient. Seasonal precipitation for this year contributed a substantial amount of water for the irrigation in terms of both antecedent soil moisture, and seasonal water requirement.

Figure 3 Agro-meteorological data for the Odessa area flux station

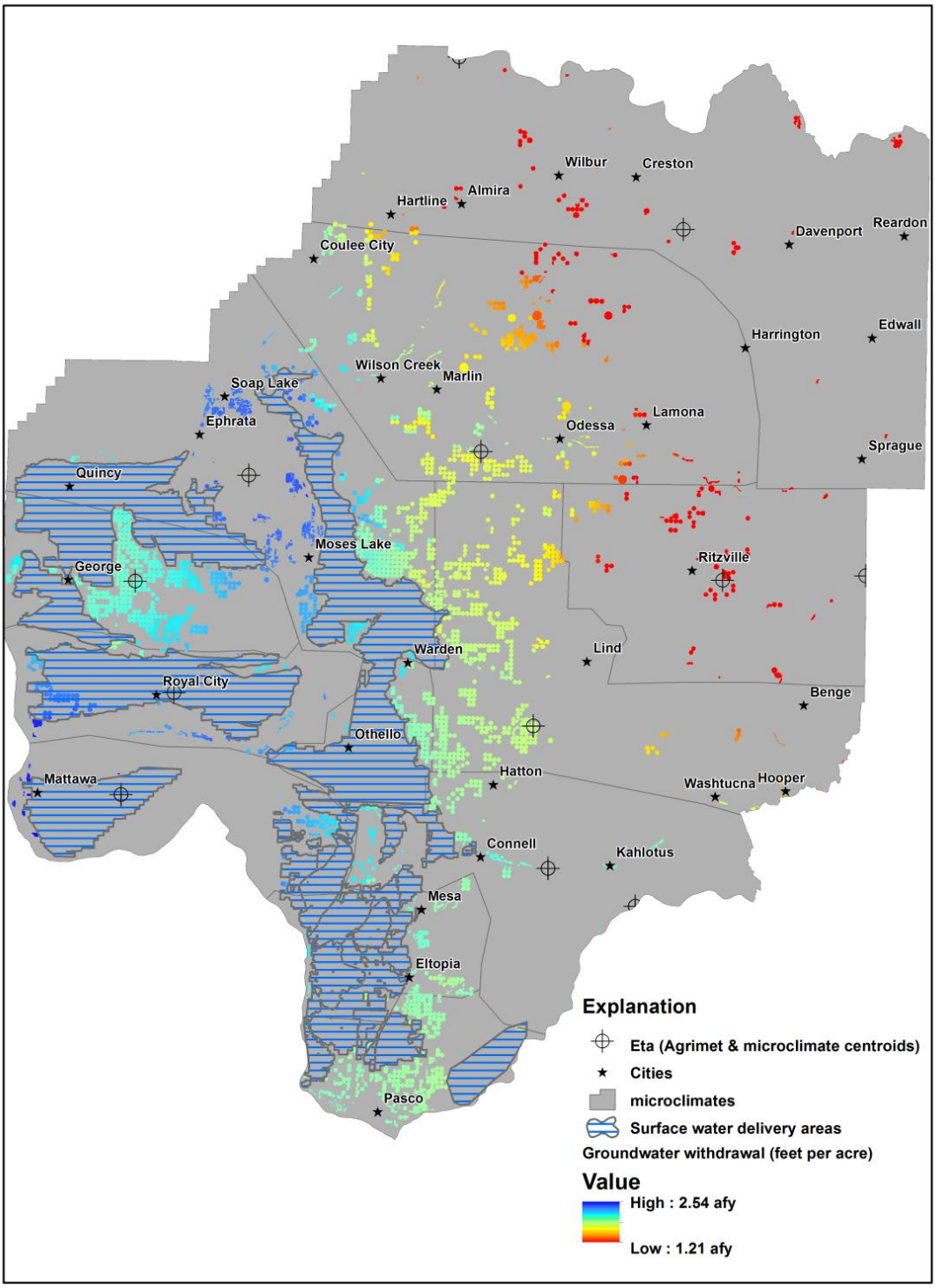

Note: Estimated water requirements for groundwater-based acreage per field shown with microclimate boarders, extent of surface water contracts, location of Eta field based data, which includes both Agriment weather stations, and microclimate centroids (where necessary).

Figure 4 Evapotranspiration - Based Seasonal Water Requirement Thematic Map

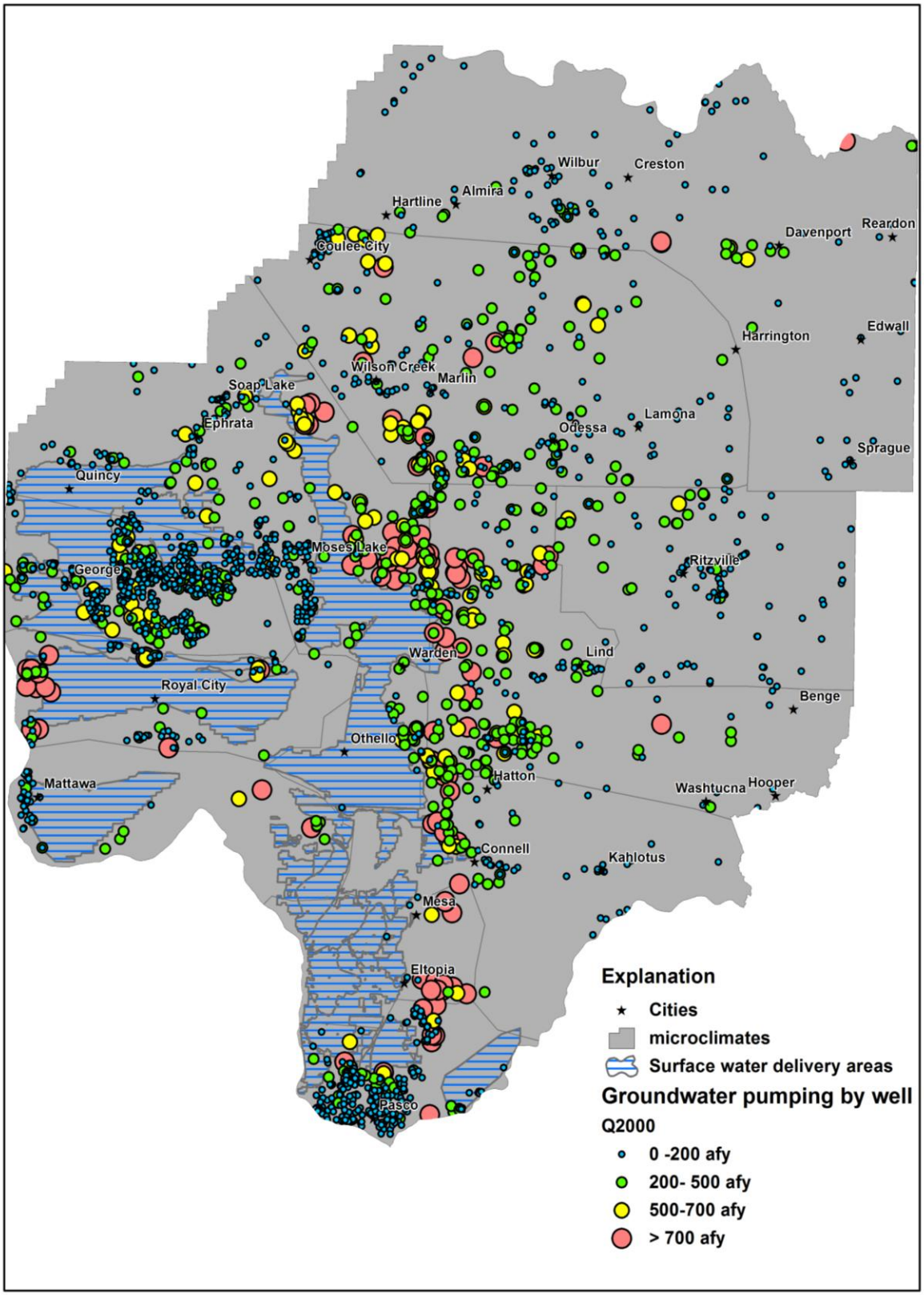

Figure 5 Groundwater Pumping by Well (2000) Thematic Map

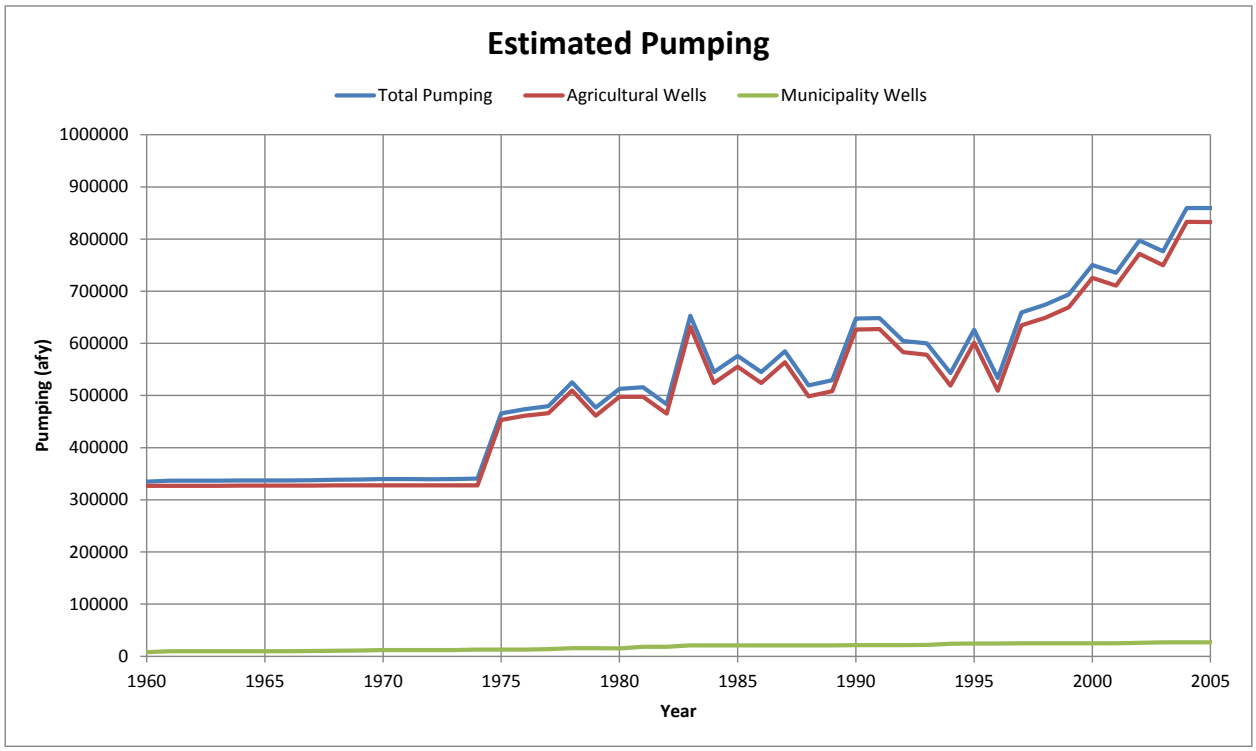

Figure 6 Estimated Total Groundwater Pumping within the GWMA

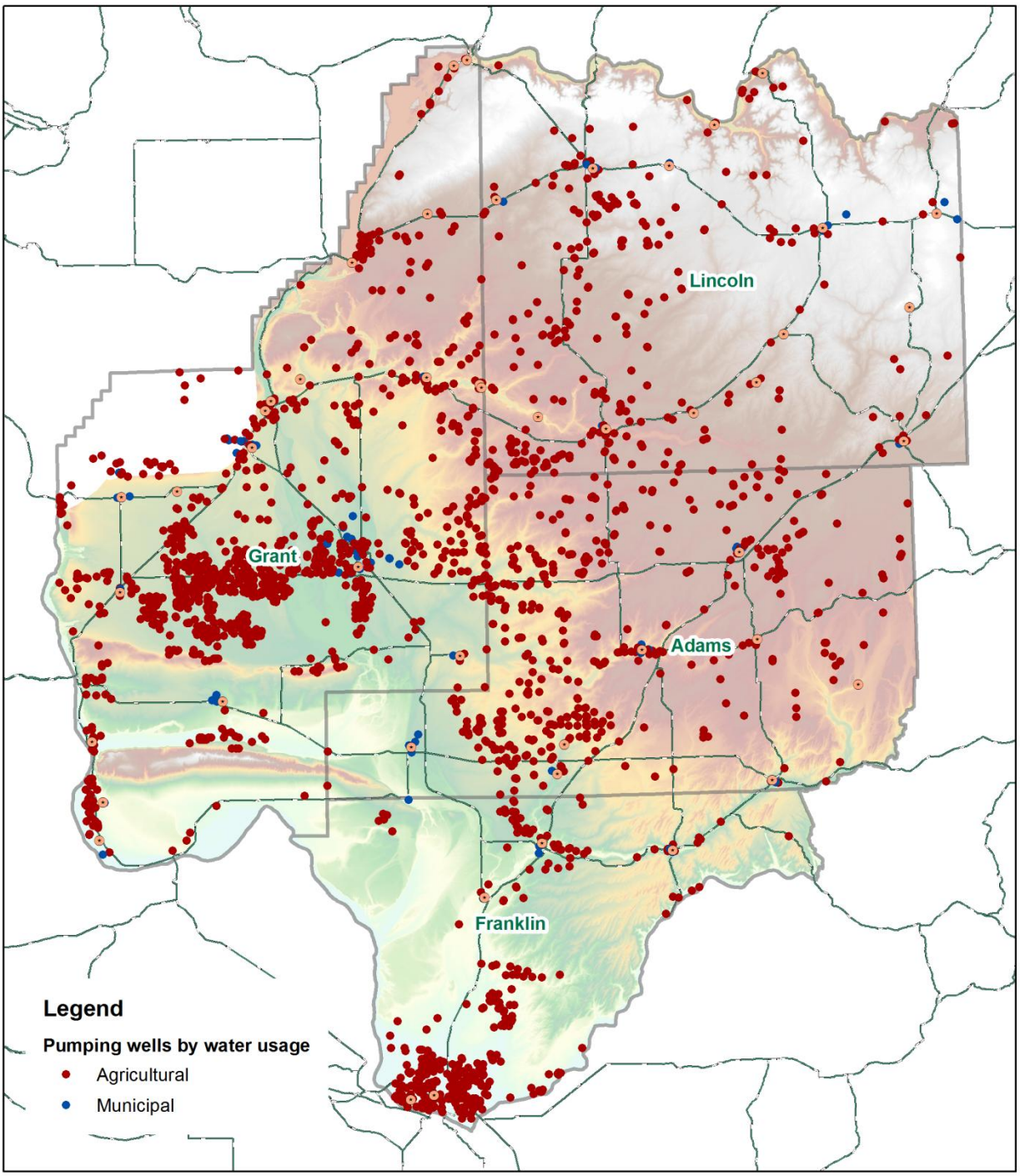

Figure 7 Locations of Groundwater Pumping within the GWMA

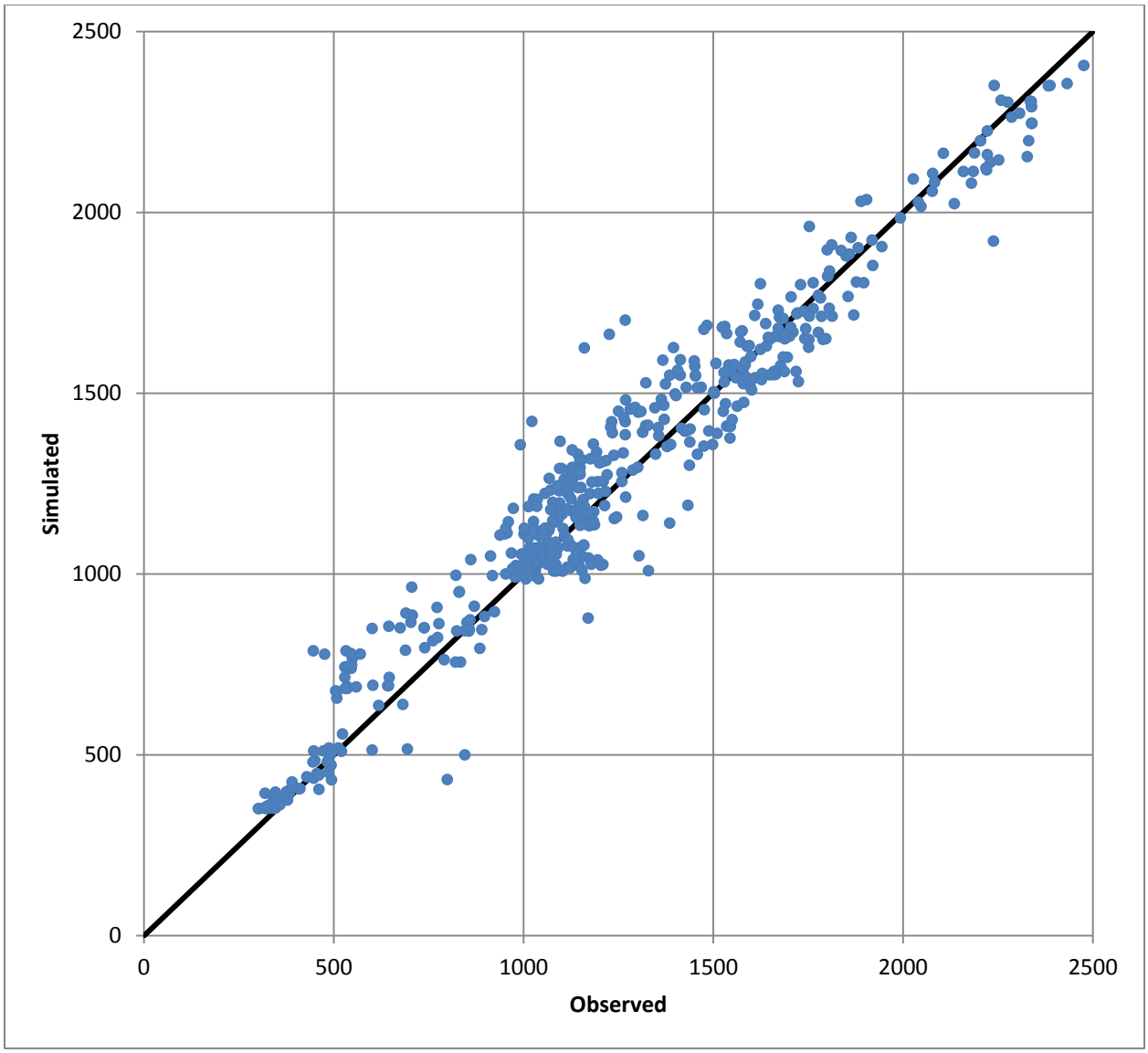

Figure 8 Calibration Scatter Plot for Pre-Development Conditions

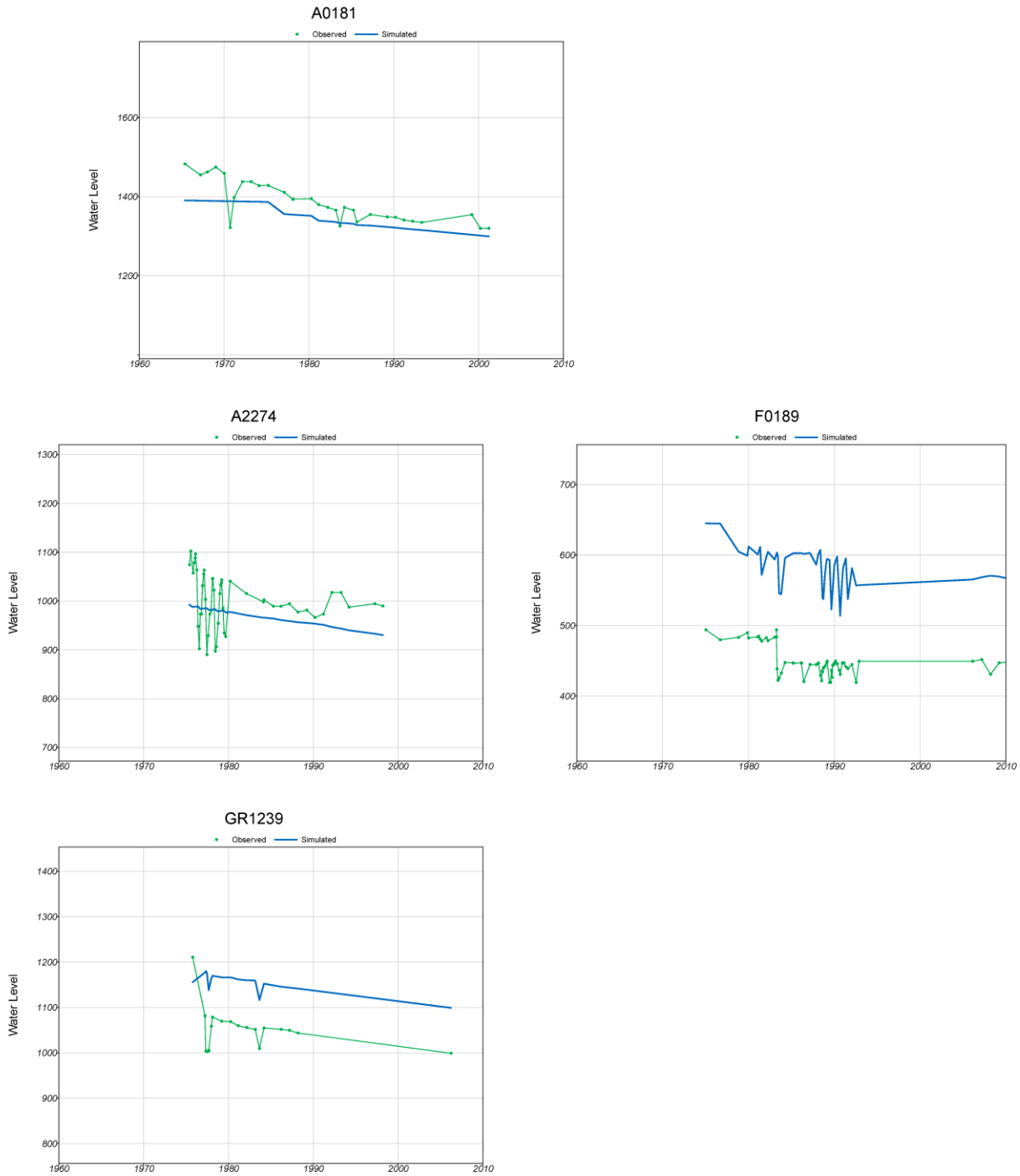

Figure 9 Calibration Hydrographs during Development Conditions

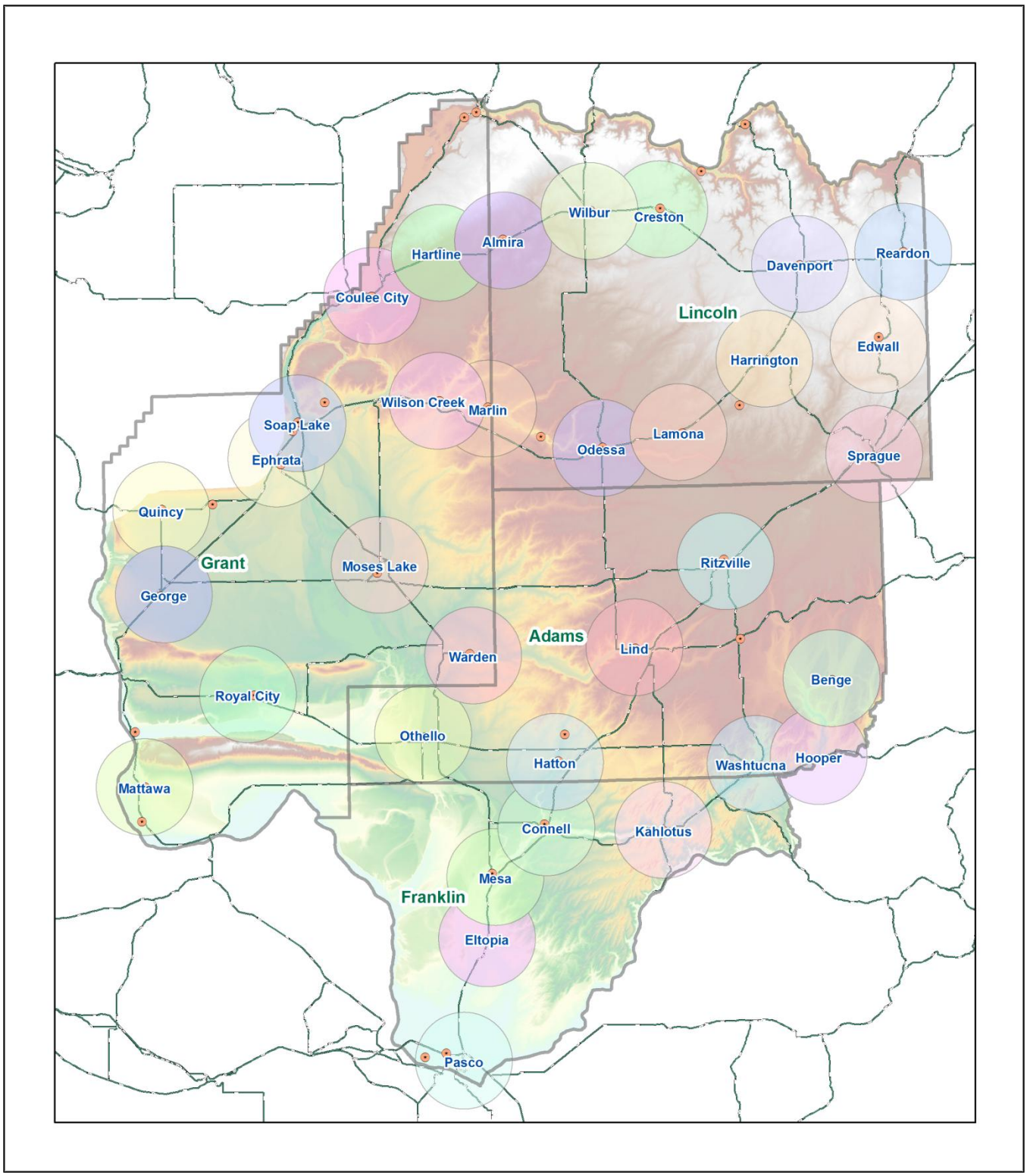

Figure 10 Locations of the Simulated Municipalities

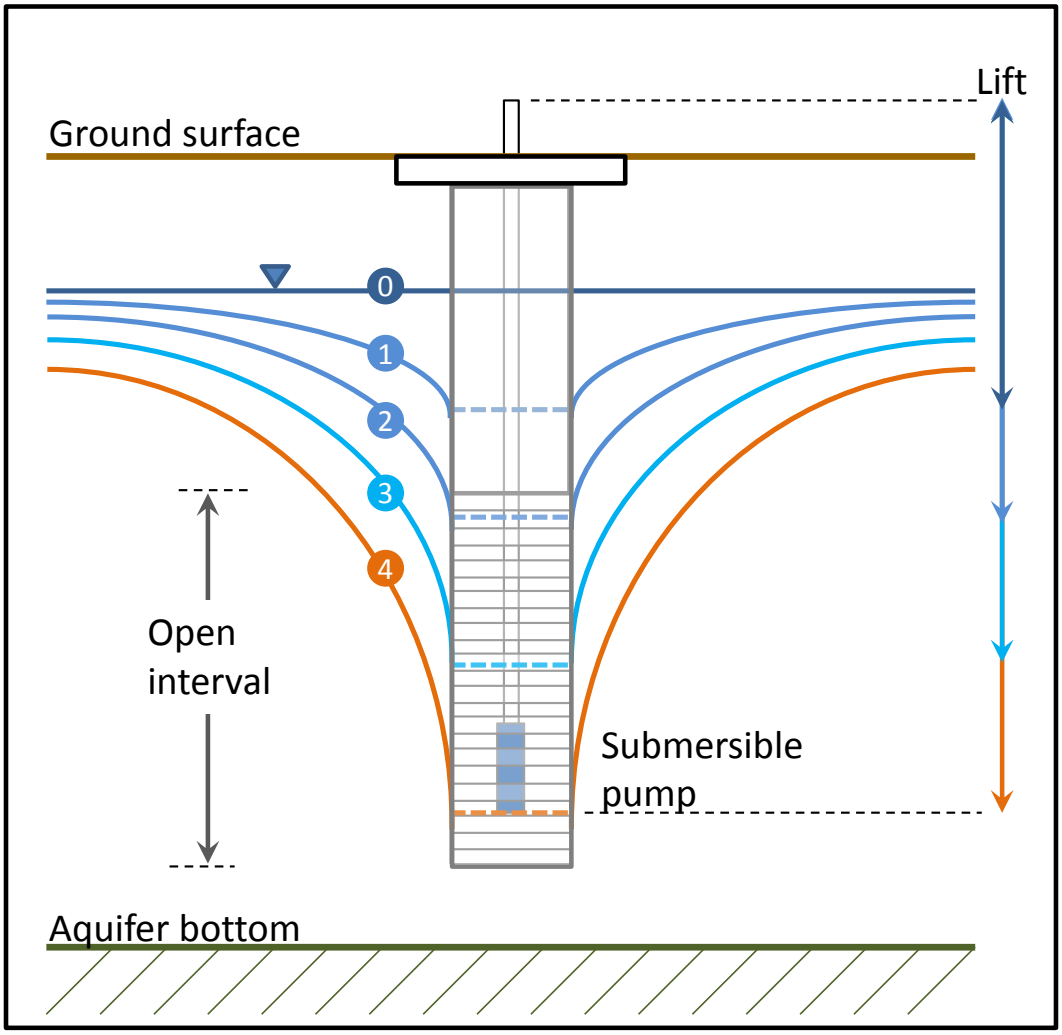

Figure 11 Schematic Illustrating Various Stages in Well Operations and Efficiency

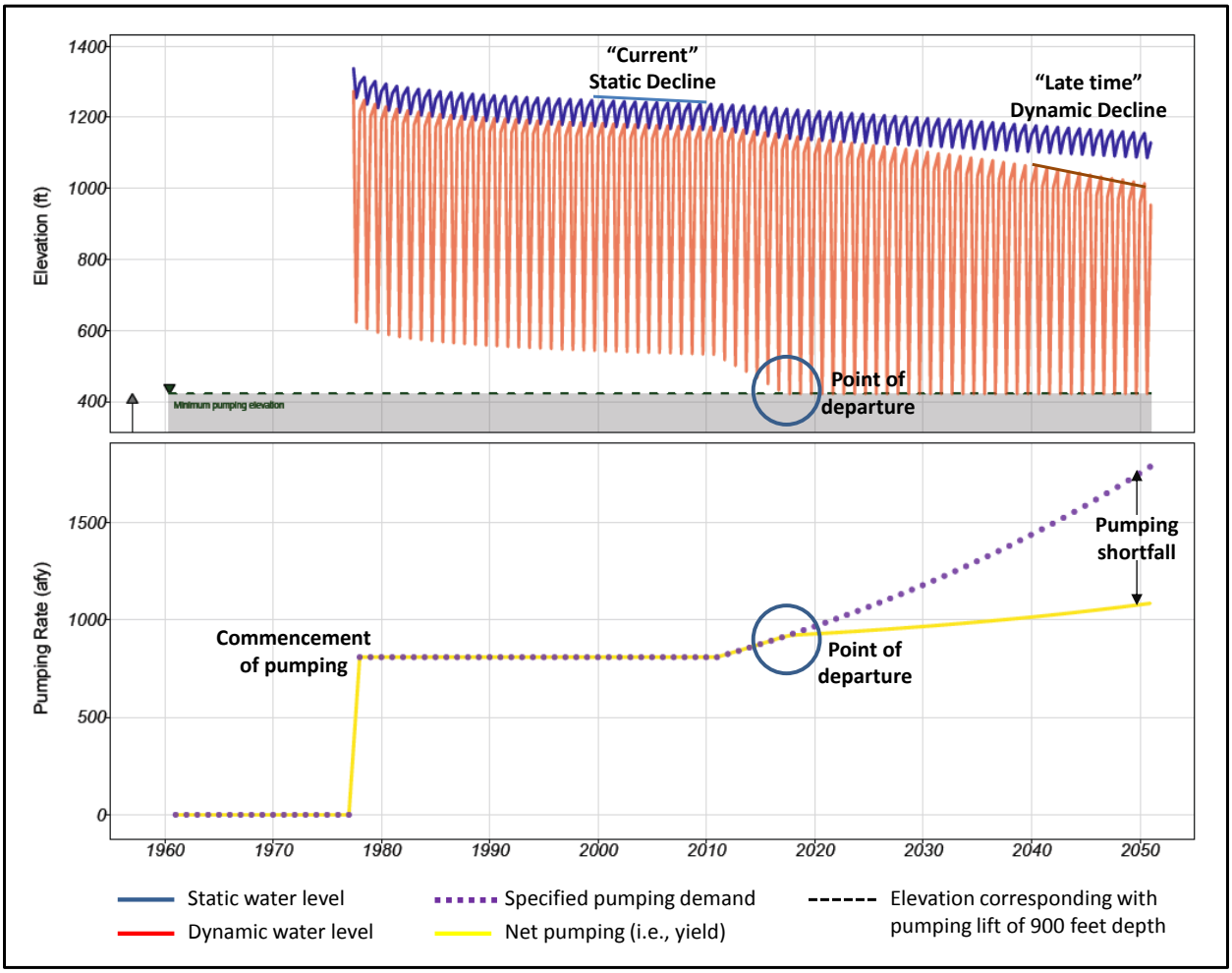

Figure 12 Annotated Example of the Life-Cycle of a Municipal Supply Well

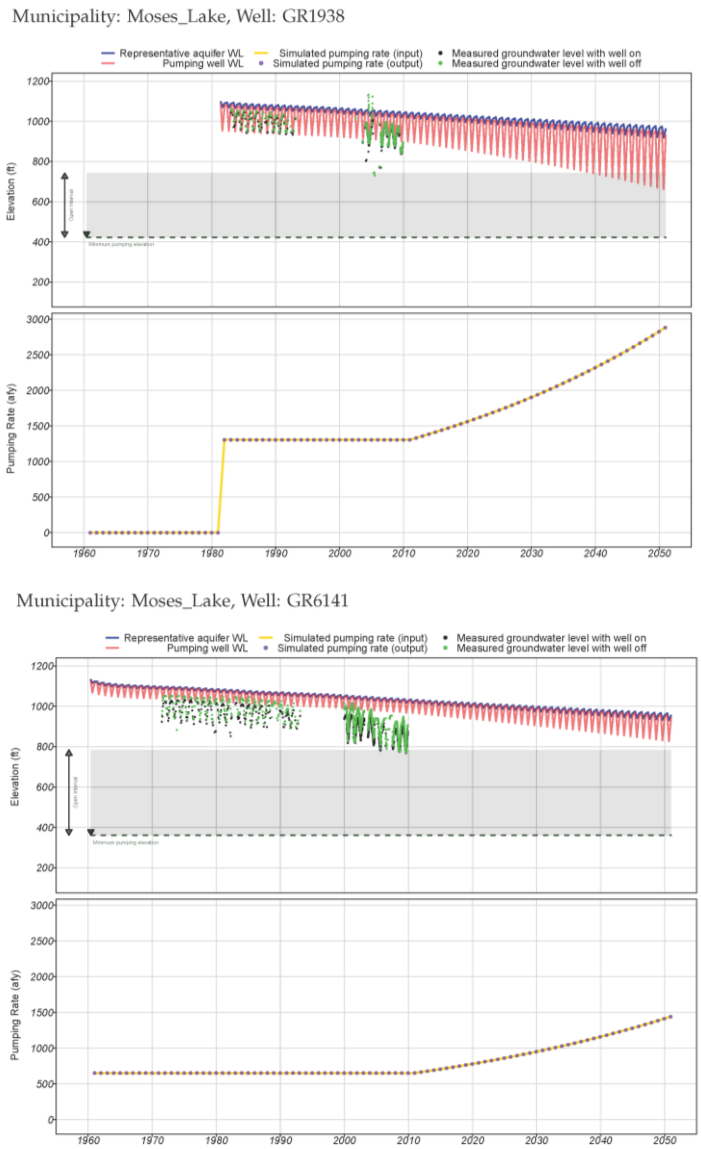

Figure 13 Examples of Simulated and Observed Municipal Well Water Level Declines

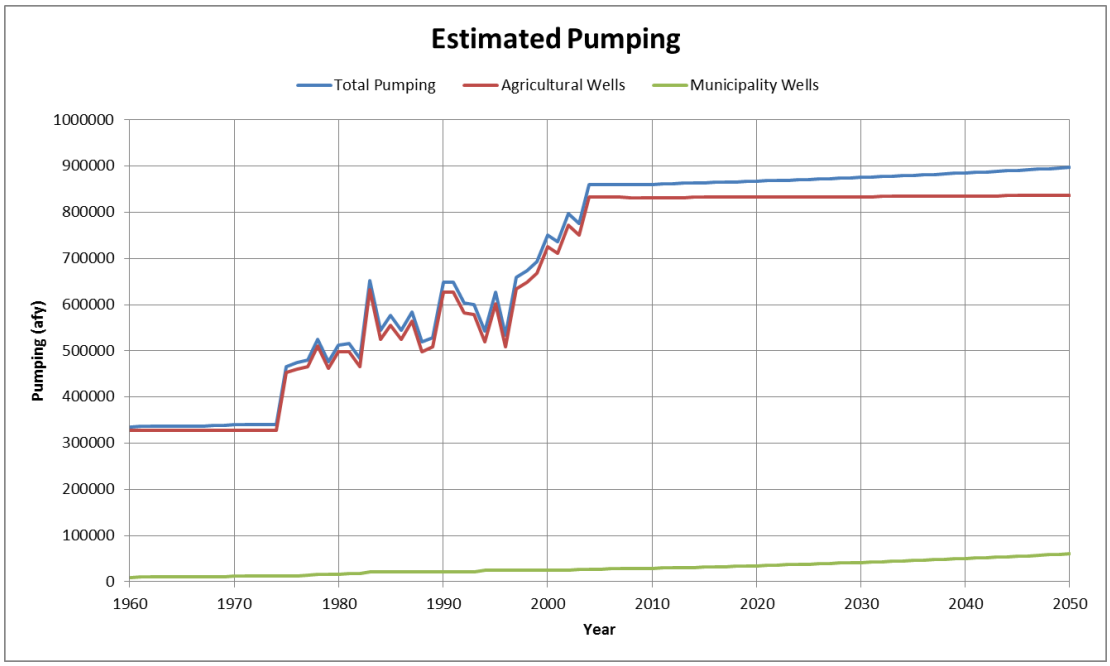

Figure 14 Historic and Projected Demand using a 2% Escalation for Municipal Demands and Zero Escalation for Agricultural Demands

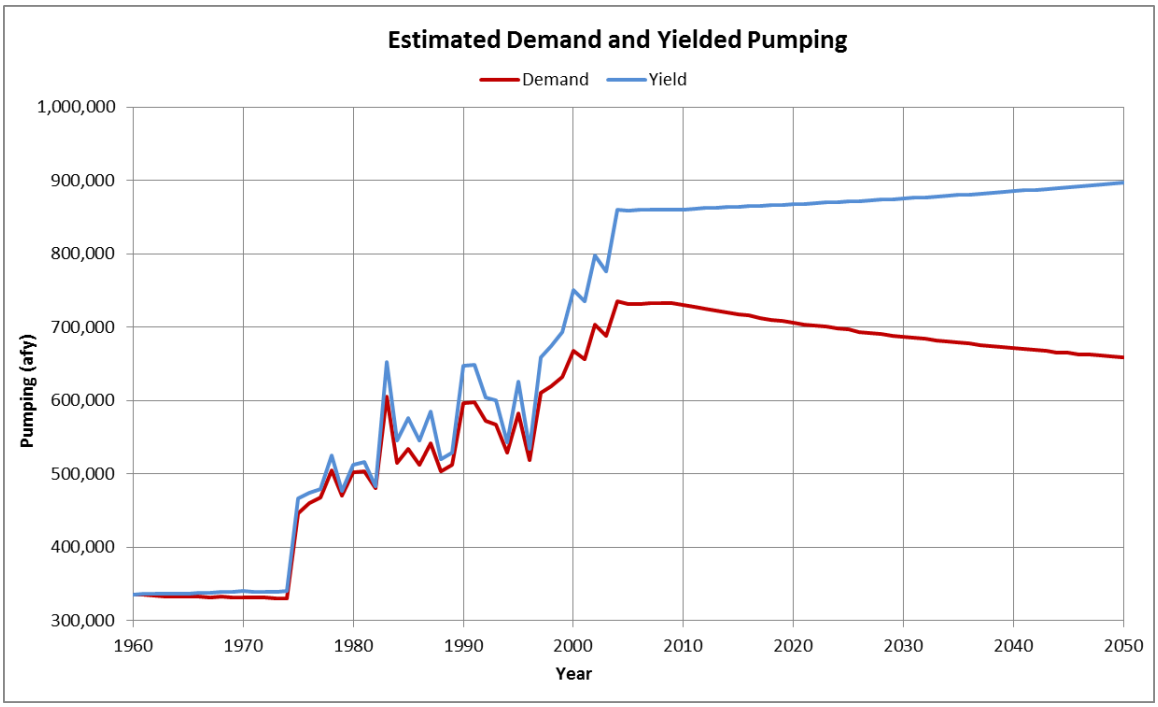

Figure 15 Projected Supply Shortfalls (Demand minus Yield) using a 2% Escalation for Municipal Demands and Zero Escalation for Agricultural Demands

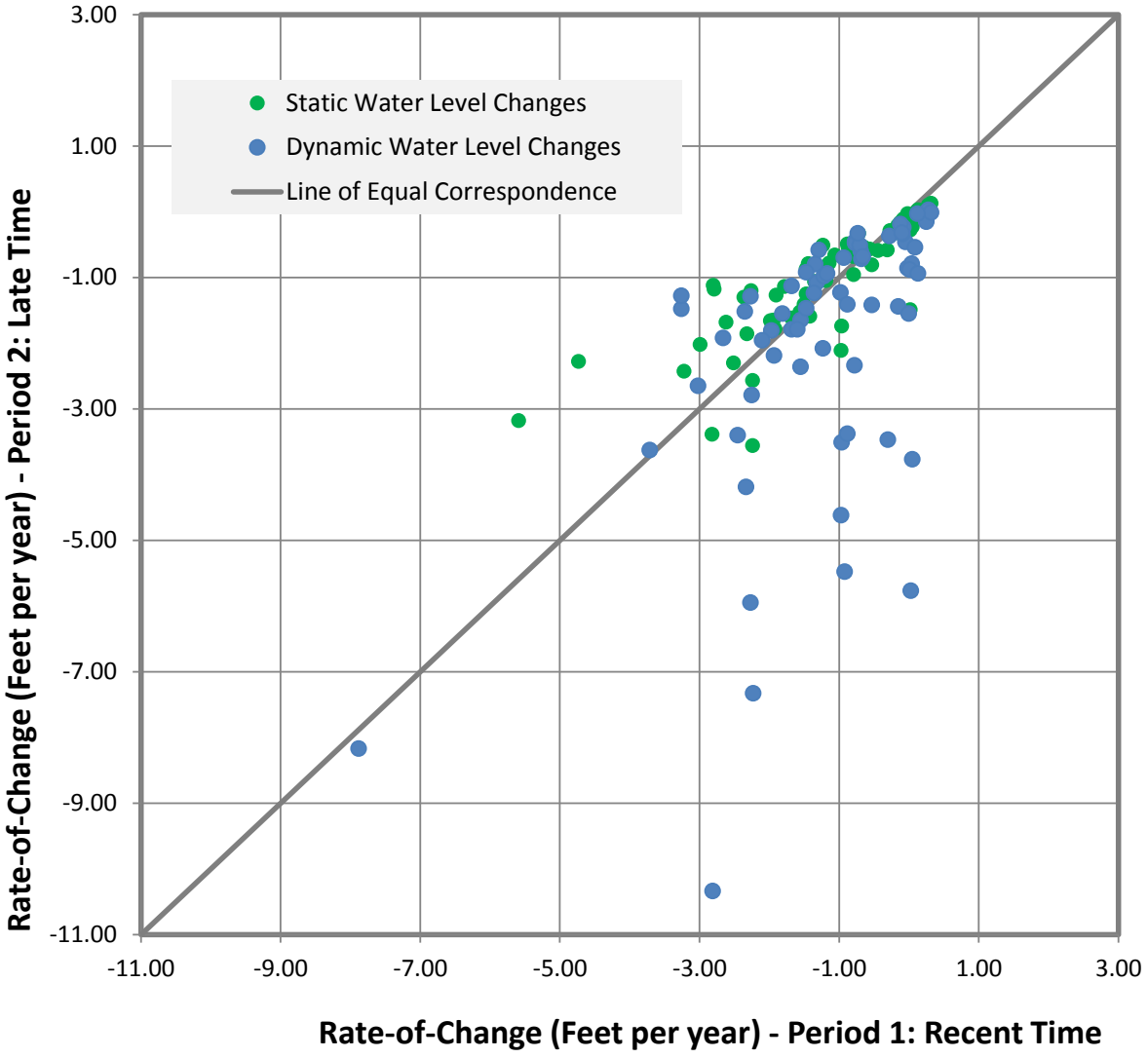

Figure 16 Simulated Recent-Time and Projected Late-Time "Static" and"Dynamic" Water Level Changes

Tables

Table 1 Estimated Crop Types Using Landsat-Based

Classification versus Reported Crop Types from the Washington State Department of Agriculture (WSDA) for an Area of Approximately 15,000 Hectares (3029 fields).

Crop Type	Number of Fields	Area Sampled (hectares)	Remote Sensing (% of total)	Reported WSDA (% of total)
Alfalfa	681	13830	0.25	0.36
Corn	137	3114	0.06	0.09
Orchard	507	3799	0.07	0.08
Other	895	14979	0.27	0.22
Potato	304	9127	0.17	0.16
Irrigated Wheat	505	10170	0.18	0.09

Table 2 Current Parameterization of Hydraulic Properties in the GWMA Model

HSU	HK	VK	S	Sy
QF	200	20.0000	0.0000144	0.3
QL	200	20.0000	0.0000144	0.3
PPL	200	20.0000	0.0000144	0.3
TRF	200	20.0000	0.0000144	0.3
TRWIE	200	20.0000	0.0000144	0.3
TIH	24	0.0048	0.0000216	0.3
TEL	24	0.0048	0.0000216	0.3
TEM	24	0.0048	0.0000216	0.3
TERR	24	0.0048	0.0000216	0.3
TP	24	0.0048	0.0000216	0.3
TES	24	0.0048	0.0000216	0.3
TEQ	24	0.0048	0.0000216	0.1
TA	24	0.0048	0.0000216	0.1
TWC	24	0.0048	0.0000216	0.1
TU	24	0.0048	0.0000216	0.1
TEMB	24	0.0048	0.0000216	0.1
TPR	6.48	0.0011	0.0000216	0.1
TEQC	6.48	0.0011	0.0000216	0.1
TR	6.48	0.0011	0.0000216	0.1
TESC	6.48	0.0011	0.0000216	0.1
TFSG	6.48	0.0011	0.0000216	0.1
TFSH1	172.8	1.4400	0.0000216	0.1
TFSH	6.48	0.0011	0.0000216	0.1
TFSF1	172.8	1.4400	0.0000216	0.1
TFSF	0.72	0.0011	0.0000216	0.1
TFG17	172.8	1.4400	0.0000216	0.1
TFG	0.72	0.0009	0.0000216	0.1
TFG19	172.8	1.4400	0.0000216	0.1
TFPF	0.72	0.0009	0.0000216	0.1
TEV	60	0.0001	0.0000216	0.1
TGSB	0.72	0.0011	0.0000144	0.1
TGU	0.504	0.0001	0.0000144	0.1
TGO	0.504	0.0002	0.0000144	0.1
TGG	0.504	0.0002	0.0000144	0.1
TGWR	0.504	0.0002	0.0000144	0.1

Table 3 List of the Simulated Municipalities

No	Municipality	No	Municipality
1	Almira	19	Mattawa
2	Benge	20	Mesa
3	Connell	21	Moses_Lake
4	Coulee_City	22	None
5	Creston	23	Odessa
6	Davenport	24	Othello
7	Edwall	25	Pasco
8	Eltopia	26	Quincy
9	Ephrata	27	Reardon
10	George	28	Ritzville
11	Harrington	29	Royal_City
12	Hartline	30	Soap_Lake
13	Hatton	31	Sprague
14	Hooper	32	Warden
15	Kahlotus	33	Washtucna
16	Lamona	34	Wilbur
17	Lind	35	Wilson_Creek
18	Marlin	36	

Table 4 Tabulation of Projected "Static" and "Dynamic" Water Level Declines

Well	Municipality	Period 1 – "Recent Time"				Period 2 – "Late Time"			
		Date		Decline Rate (ft/year)		Date		Decline Rate (ft/year)	
		Start	End	Static	Dynamic	Start	End	Static	Dynamic
L0517	Almira	1/1/2001	1/1/2011	-0.04	-0.09	12/31/2040	12/31/2050	-0.04	-0.69
L2034	Almira	1/1/2001	1/1/2011	-0.19	-0.18	12/31/2040	12/31/2050	-0.27	-1.50
F0380	Connell	1/1/2001	1/1/2011	-2.26	-2.28	12/31/2040	12/31/2050	-2.59	-5.97
F0431	Connell	1/1/2001	1/1/2011	-0.14	-0.10	12/31/2040	12/31/2050	-0.35	-0.37
F0479	Connell	1/1/2001	1/1/2011	-2.29	-2.29	12/31/2040	12/31/2050	-1.22	-1.31
F0480	Connell	1/1/2001	1/1/2011	-2.38	-2.38	12/31/2040	12/31/2050	-1.32	-1.54
L0567	Creston	1/1/2001	1/1/2011	-0.03	-0.10	12/31/2040	12/31/2050	-0.14	-0.95
L0454	Davenport	1/1/2001	1/1/2011	0.06	0.07	12/31/2040	12/31/2050	-0.09	-0.26
L0461	Davenport	1/1/2001	1/1/2011	-0.11	-0.14	12/31/2040	12/31/2050	-0.33	-0.94
L0462	Davenport	1/1/2001	1/1/2011	-0.14	-0.17	12/31/2040	12/31/2050	-0.39	-1.05
L0465	Davenport	1/1/2001	1/1/2011	-0.16	-0.15	12/31/2040	12/31/2050	-1.52	-5.81
GR1074	Ephrata	1/1/2001	1/1/2011	-0.96	-0.96	12/31/2040	12/31/2050	-1.74	-3.52
GR8717	Ephrata	1/1/2001	1/1/2011	-0.97	-0.97	12/31/2040	12/31/2050	-2.11	-4.62
GR0281	George	1/1/2001	1/1/2011	-0.77	-0.77	5/31/1960	5/31/1970	-0.45	-0.45
GR4546	George	1/1/2001	1/1/2011	-0.77	-0.77	5/31/1961	5/31/1971	-0.48	-0.48
L1681	Harrington	1/1/2001	1/1/2011	0.01	0.01	12/31/2040	12/31/2050	-0.10	-1.07
A0016	Hatton	1/1/2001	1/1/2011	-2.82	-3.28	12/31/2040	12/31/2050	-1.08	-1.50
A0337	Hatton	1/1/2001	1/1/2011	-2.81	-3.28	12/31/2040	12/31/2050	-1.72	-1.30
F4147	Kahlotus	1/1/2001	1/1/2011	-0.29	-0.29	12/31/2040	12/31/2050	-0.30	-0.38
G0916	Kahlotus	1/1/2001	1/1/2011	-0.33	-0.32	12/31/2040	12/31/2050	-0.60	-3.48
A0135	Lind	1/1/2001	1/1/2011	-1.46	-1.60	12/31/2040	12/31/2050	-1.63	-2.41
A0136	Lind	1/1/2001	1/1/2011	-1.39	-1.37	12/31/2040	12/31/2050	-1.09	-1.12
A0148	Lind	1/1/2001	1/1/2011	-1.26	-1.25	12/31/2040	12/31/2050	-1.01	-1.01
A0149	Lind	1/1/2001	1/1/2011	-1.20	-1.39	12/31/2040	12/31/2050	-1.10	-1.29
GR3507	Mattawa	1/1/2001	1/1/2011	-0.08	-0.08	12/31/2040	12/31/2050	-0.11	-0.24
GR3508	Mattawa	1/1/2001	1/1/2011	-0.13	-0.12	12/31/2040	12/31/2050	-0.16	-0.19
GR3509	Mattawa	1/1/2001	1/1/2011	-0.10	-0.10	12/31/2040	12/31/2050	-0.18	-0.33
F4104	Mesa	5/31/2006	5/31/2016	-0.82	-1.24	12/31/2040	12/31/2050	-0.70	-2.10
GR0635	Moses_Lake	1/1/2001	1/1/2011	-1.68	-1.68	12/31/2040	12/31/2050	-1.63	-1.80
GR0837	Moses_Lake	1/1/2001	1/1/2011	-2.51	-2.45	12/31/2040	12/31/2050	-2.30	-3.41
GR0849_U	Moses_Lake	1/1/2001	1/1/2011	-2.83	-2.81	12/31/2040	12/31/2050	-3.40	-10.36
GR1692	Moses_Lake	1/1/2001	1/1/2011	-2.97	-3.01	12/31/2040	12/31/2050	-2.03	-2.66
GR1802_A	Moses_Lake	1/1/2001	1/1/2011	-1.56	-1.55	12/31/2040	12/31/2050	-1.54	-1.66

Table 4 Tabulation of Projected “Static” and “Dynamic” Water Level Declines (continued)

Well	Municipality	Period 1 – “Recent Time”				Period 2 – “Late Time”			
		Date		Decline Rate (ft/year)		Date		Decline Rate (ft/year)	
		Start	End	Static	Dynamic	Start	End	Static	Dynamic
GR1922	Moses_Lake	5/31/2006	5/31/2016	-4.74	-9.14	5/31/2027	5/31/2037	-2.30	-14.13
GR1938	Moses_Lake	1/1/2001	1/1/2011	-1.92	-1.93	12/31/2040	12/31/2050	-1.79	-2.20
GR1942	Moses_Lake	1/1/2001	1/1/2011	-2.24	-2.24	12/31/2040	12/31/2050	-3.57	-7.34
GR1946	Moses_Lake	1/1/2001	1/1/2011	-2.32	-2.26	12/31/2040	12/31/2050	-1.88	-2.81
GR6141	Moses_Lake	1/1/2001	1/1/2011	-1.94	-1.97	12/31/2040	12/31/2050	-1.66	-1.82
GR6174	Moses_Lake	5/31/2008	5/31/2018	-5.59	-7.88	12/31/2040	12/31/2050	-3.19	-8.18
GR6175	Moses_Lake	5/31/2003	5/31/2013	-1.50	-1.60	12/31/2040	12/31/2050	-1.42	-1.80
GR6183	Moses_Lake	5/31/2009	5/31/2019	-3.23	-3.72	12/31/2040	12/31/2050	-2.44	-3.64
GR6186_B	Moses_Lake	1/1/2001	1/1/2011	-1.98	-2.10	12/31/2040	12/31/2050	-1.67	-1.97
GR8244	Moses_Lake	1/1/2001	1/1/2011	-0.53	-0.54	5/31/2036	5/31/2046	-0.80	-1.88
L0053	Odessa	1/1/2001	1/1/2011	-1.08	-1.19	12/31/2040	12/31/2050	-0.56	-0.84
L1455	Odessa	1/1/2001	1/1/2011	-1.27	-1.34	12/31/2040	12/31/2050	-0.52	-0.59
A0004	Othello	1/1/2001	1/1/2011	-1.79	-1.69	12/31/2040	12/31/2050	-1.15	-1.14
A0250	Othello	1/1/2001	1/1/2011	-0.46	-0.98	12/31/2040	12/31/2050	-0.60	-1.23
A1466	Othello	1/1/2001	1/1/2011	-1.48	-1.48	12/31/2040	12/31/2050	-1.26	-1.48
A1532	Othello	5/31/2002	5/31/2012	-1.91	-1.82	12/31/2040	12/31/2050	-1.28	-1.56
GR0553	Quincy	1/1/2001	1/1/2011	-0.82	-0.92	5/31/2014	5/31/2024	-0.59	-5.58
GR0556	Quincy	1/1/2001	1/1/2011	-0.73	-2.25	5/31/1996	5/31/2006	-0.60	-4.20
GR7651	Quincy	1/1/2001	1/1/2011	-0.81	-0.88	5/31/2005	5/31/2015	-0.63	-1.41
L0485	Reardon	1/1/2001	1/1/2011	0.14	0.14	12/31/2040	12/31/2050	0.03	-0.05
A0559	Ritzville	1/1/2001	1/1/2011	-0.92	-0.76	12/31/2040	12/31/2050	-0.61	-0.67
A0560	Ritzville	1/1/2001	1/1/2011	-0.95	-0.76	12/31/2040	12/31/2050	-0.61	-0.80
A0563	Ritzville	1/1/2001	1/1/2011	-0.87	-0.77	12/31/2040	12/31/2050	-0.59	-0.58
A2756	Ritzville	1/1/2001	1/1/2011	-1.04	-0.74	12/31/2040	12/31/2050	-0.64	-0.76
G1461	Royal_City	1/1/2001	1/1/2011	-1.14	-0.93	12/31/2040	12/31/2050	-0.78	-0.70
GR1644	Royal_City	1/1/2001	1/1/2011	-1.44	-1.35	12/31/2040	12/31/2050	-0.79	-0.80
GR1924	Royal_City	5/31/2005	5/31/2015	-1.48	-1.48	12/31/2040	12/31/2050	-0.88	-0.93
GR9309	Soap_Lake	1/1/2001	1/1/2011	-0.80	-0.79	12/31/2040	12/31/2050	-0.97	-2.35
L0216	Sprague	1/1/2001	1/1/2011	0.19	0.19	12/31/2040	12/31/2050	0.03	-0.11
G1616	Warden	1/1/2001	1/1/2011	-2.66	-2.67	12/31/2040	12/31/2050	-1.77	-1.94
A2071	Washtucna	1/1/2001	1/1/2011	-0.03	0.00	12/31/2040	12/31/2050	-0.30	-3.81
A2076	Washtucna	1/1/2001	1/1/2011	0.08	0.09	12/31/2040	12/31/2050	-0.09	-0.08
L0547	Wilbur	1/1/2001	1/1/2011	-0.13	-0.12	12/31/2040	12/31/2050	-0.25	-1.67

Table 4 Tabulation of Projected “Static” and “Dynamic” Water Level Declines (continued)

Well	Municipality	Period 1 – “Recent Time”				Period 2 – “Late Time”			
		Date		Decline Rate (ft/year)		Date		Decline Rate (ft/year)	
		Start	End	Static	Dynamic	Start	End	Static	Dynamic
L2075	Wilbur	1/1/2001	1/1/2011	-0.04	-0.08	12/31/2040	12/31/2050	-0.14	-1.03
GR1152	Wilson_Creek	1/1/2001	1/1/2011	-0.74	-0.75	12/31/2040	12/31/2050	-0.36	-0.35
GR1153	Wilson_Creek	1/1/2001	1/1/2011	-0.90	-0.89	12/31/2040	12/31/2050	-0.51	-3.39

Table 5 Summary Statistics for Projected “Static” and “Dynamic” Water Level Declines

	Decline Rate (ft/year): Period 1 - "Recent Time"		**Decline Rate (ft/year): Period 2 - "Late Time"**	
	Static	*Dynamic*	*Static*	*Dynamic*
Average	-1.22	-1.37	-1.03	-2.17
Median	-0.96	-0.97	-0.78	-1.41
90th %tile	-2.69	-2.698	-2.148	-4.812

Appendix D

Davenport

Groundwater Geochemistry

Appendix D

Hydrochemical Characterization of Groundwater Produced by Municipal Water Wells in the Columbia Basin GWMA, WA

Introduction

Hydrochemical data from 85 water supply wells from cities and towns located throughout the Columbia Basin GWMA were analyzed in an effort to identify trends indicative of various groundwater types and recharge sources. The data analyzed included major ion, percent modern carbon, tritium, stable isotopes of oxygen and hydrogen and CFC's. A thorough explanation of analytical methods is given in GWMA 2009 A and B. Relationships to geological structures (fold, faults, dykes, etc.) and well construction issues (casing and seal depths and open interval) were also considered. Implications from this analysis in combination with long term water well levels could be an indication of the sustainability of groundwater resources available for municipalities within the study area.

Methodology

Carbon-14/Percent Modern Carbon – Used to give an absolute age date to groundwater and to assess recharge by identifying the presence of fossil basalt groundwater. Carbon-14 is useful in constraining the proportion of young water that comprises a mixed groundwater sample (i.e., the fraction that may be considered to be renewable). Carbon-14 is used for age dating water as old as approximately 50,000 years.

Tritium – Used to identify the presence of modern recharge (≤60 years old). Tritium, or ^{3}H, is useful as a groundwater age tracer because the tritium atom, being an isotope of hydrogen, is part of the water molecule. This is the only age tracer for which this is true. Given this molecular chemistry, tritium will be present in water entering the groundwater system as recharge. The majority of tritium found in the modern environment results from the manufacture of nuclear materials. This tritium, commonly referred to as bomb-peak tritium, is a robust indicator of a young groundwater age. If tritium is not detected in a sample (<0.1 tritium units [TU]), it can be concluded that the groundwater was recharged before 1950; if tritium is detected, then the water sample contains at least a fraction that was recharged since the 1950s.

Stable Isotopes – Used to obtain the mixing ratio of modern water to FBG in mixed groundwater samples. Ratios of stable isotopes of oxygen ($^{18}O/^{16}O$) and hydrogen (D/H) measured in groundwater are useful in that they provide distinct isotopic signatures that can be used to identify the presence of specific end members that may comprise mixed groundwater samples. End member isotopic signatures are consistent and therefore, if a mixed groundwater is known to contain certain end members, the contributory percentages of each end member can be back calculated for a given mixed groundwater sample (Figures D1 and D2).

Major Ion, Dissolved Silica and Nitrate Chemistry – Cations to include Ca^{+2}, Mg^{+2}, Na^{+1}, K^{+1}; anions to include Cl^{-1}, $SO4^{-2}$, $HCO3^{-1}$ and SiO_2 were used to identify certain geochemical

signatures that result from the progressive evolution of groundwater chemistry due water-rock reactions. End members express distinct geochemical signatures when major ions, dissolved SiO_2 and NO_3^{-1} concentrations are converted to molar equivalents and plotted on Stiff diagrams (Figure D3). Mixed and young water groundwater samples display Stiff patterns that are intermediated to the Stiff patterns of modern water and FBG.

Results and Discussion

Of the 85 water supply wells sampled in 2008 and 2010, 49% contained modern water, 18% contained all FBG and 33% contained all young water (Table 1). However, it must be stated that wells containing all young water may contain a component of FBG if construction information indicates that the well may be open to multiple water bearing units including CRBG units and supra-basalt sediments. Also, many wells indicated by TU ≥ 0.5 as having modern water, appeared chemically to be a mixture of modern water and either FBG and/or young water. This could be due to mixing of modern water and FBG or young water. Appendix A contains Piper plots and other relevant information for each city in this study. Stable isotope data suggests that most of the mixed wells in the study area produce groundwater that is a mixture of CBSW (meteoric water from precipitation or water bodies mostly supplied by precipitation) and FBG. On individual isotope plots, most municipal well data are shifted below the local meteoric water line between values of FBG and CBSW. It is impossible to differentiate young water as an end member in mixed wells producing tritiated water because young water is only distinguishable as a single source in non-mixed wells that produce non-tritiated groundwaters having major ion and stable isotope chemistries similar to mixing between CBSW and FBG. CFC data suggest that modern water present in mixed wells has an average residence time of 34 years and constitutes, on average, 49% of the mixture.

Slightly less than half (47%) of wells sampled in this study have various construction flaws to include shallow or absent seals and/or casings. This most likely is a key factor in accounting for the presence of modern water in many wells. In some areas, geologic structures could be influencing modern water recharge to upper CRBG aquifers tapped by municipal wells. For example, all 3 wells for the town of Warden produce modern water regardless of construction and 2 major folds associated with the Frenchman Hills Anticline system are present in the immediate vicinity of the town. These structures could be serving as preferential flow paths for modern water infiltration. Large numbers of wells and boreholes in and around cities and towns in the GWMA could also provide numerous preferential flow paths for modern water infiltration into shallow aquifer units including supra-basalt sediments and CRBG aquifers.

Tritium was especially useful as an indicator for the presence of modern water recharged since 1950 and as a secondary check on CFC groundwater residence times. Chemically, modern water is ≥80 PMC, tritium positive value of 0.5 TU or greater and ≤ 50 years old. Wells open to deeper CRBG units producing groundwater lacking a modern or young water component produce either fossil basalt groundwater (FBG) which dates to the Pleistocene (≤ 20% PMC, is non-tritiated and >10,000 years old) or a mixture of FBG and young water (20 – 80 PMC, non-tritiated and between <10,000 and >50 years old). The origins of the three above mentioned end members are as follows:

- Modern water – Water recharged from surface water sources including local bodies such as Crab Creek, precipitation post 1950, leakage from irrigation canals or post 1950 infiltration of applied irrigation water. This water directly recharges the supra-basalt sediments or is introduced to basalt aquifers through boreholes open to multiple aquifer-hosting geologic units.
- Young water – Water recharged to supra-basalt sediments through surface water, precipitation or applied irrigation water prior to 1950.
- Fossil basalt groundwater – Water recharged to the CRBG stratified aquifer system during the Pleistocene through sub-glacial melt-water infiltration and from the Missoula catastrophic glacial floods. This groundwater is assumed to be isolated from supra-basalt sediment groundwater (young water) prior to aquifer comingling due to boreholes open to multiple aquifer-hosting geologic units.

The hydrochemical signature of the modern water is represented by that of modern Columbia Basin surface waters (CBSW) since this is the source of the water flowing in East Low Canal. Major ion chemistry indicates that these waters are of the Ca-HCO_3 type with low concentrations of sodium, potassium, magnesium and chloride. On Piper plots, these waters group far to the left of center in the upper pyramid (Figure D4). Tritium is positive (≥ 0.5) and CFC data indicates groundwater residence times of $\leq$60 years. PMC data for the surface water end members ($\geq$80%) are typical for waters that are currently in contact with the atmosphere. Oxygen and hydrogen stable isotopes indicate that modern water as described here is representative of meteoric water native to the Columbia Basin (Figure D1).

Young water is hydrochemically defined by major ion chemistry that is intermediate between modern water and FBG and is non-triated. Previous hydrochemical analysis of groundwater from the study area suggested that groundwater as it passes through overlying sediments and then recharges CRBG aquifers over long periods of time, evolves from a Ca-Mg-HCO_3 type (Columbia Basin surface waters are this type) to eventually a Na- HCO_3 type (GWMA, 2009). It is difficult however to discern mixed wells containing young water and FBG because both end members are non-tritiated. Small amounts of tritium (<0.5 TU) could be attributed to natural background concentrations produced from cosmic ray spallation (Thatcher, 1962). Silica is usually present in significant amounts in young waters and NO_3 was negative in all young water samples from the study area.

Fossil basalt groundwater (FBG) is of the Na- HCO_3 type and is non-tritiated. PMC values are $\leq$ 20% and contain no CFCs. This end member groups near the bottom on Piper plot pyramids (Figure D4). Silica is high and NO_3 is negative. Unmixed FBG samples demonstrate very similar hydrochemical characteristics throughout the GWMA.

References

GWMA, 2009, Groundwater Geochemistry of the Columbia River Basalt Group Aquifer System: Columbia Basin Ground Water Management Area of Adams, Franklin, Grant and Lincoln Counties. Technical support submitted to GWMA by GSI Water Solutions.

GWMA, 2009, Multiple Tracer Study of Recharge Mechanisms and the Age of Groundwater in the Columbia River Basalt Group Aquifer System: Columbia Basin Ground Water Management Area of Adams, Franklin, Grant, and Lincoln Counties. Technical support submitted to GWMA by GSI Water Solutions.

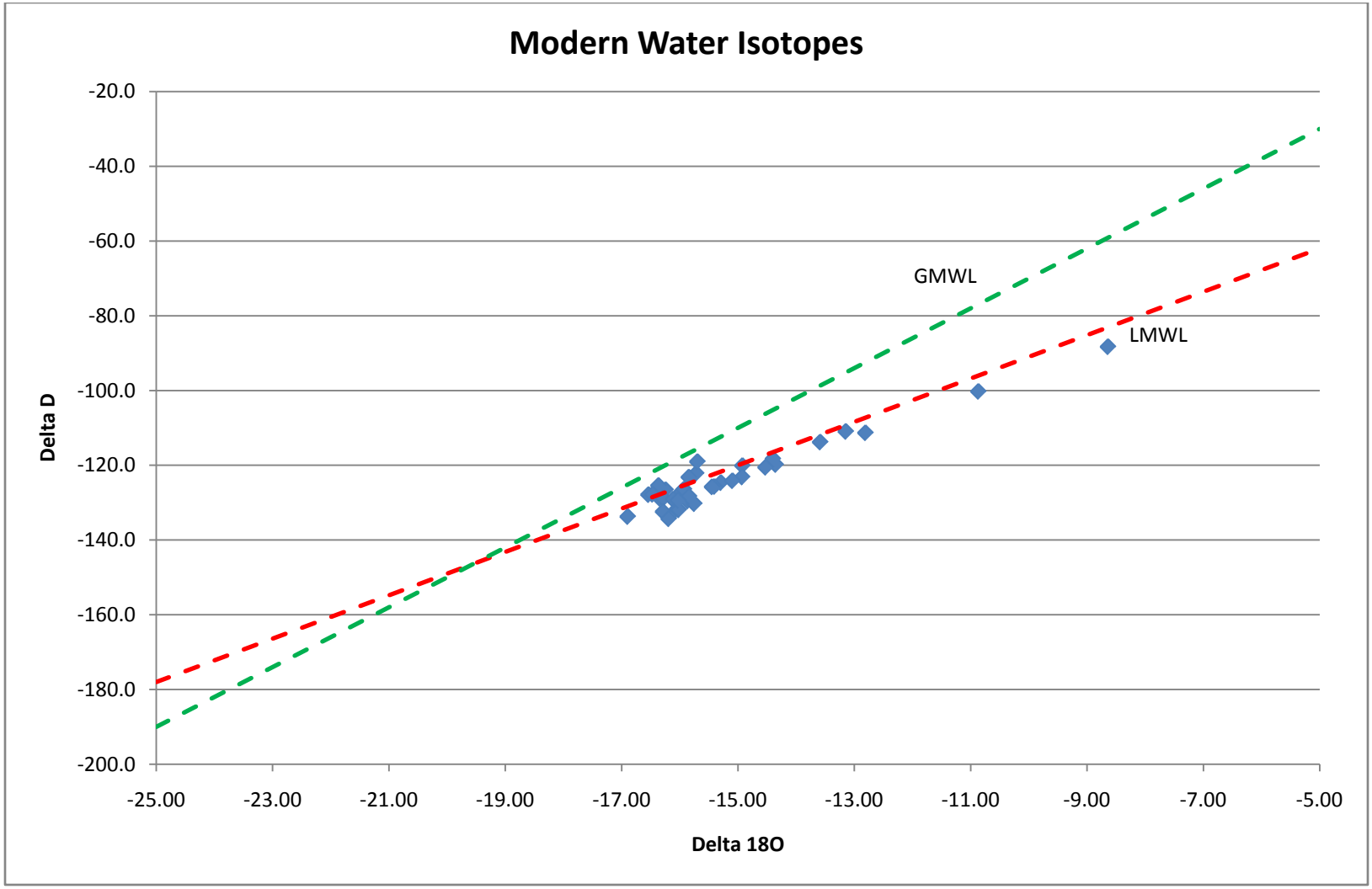

Figure D1. Stable isotope plot of modern water. Most modern water groundwater samples collected from the study area are shifted slightly below the local meteoric water line (LMWL). This suggests that modern water is most likely derived from Columbia Basin meteoric water that has been slightly isotopically altered by evaporation during infiltration through the vadose zone and/or water rock interaction.

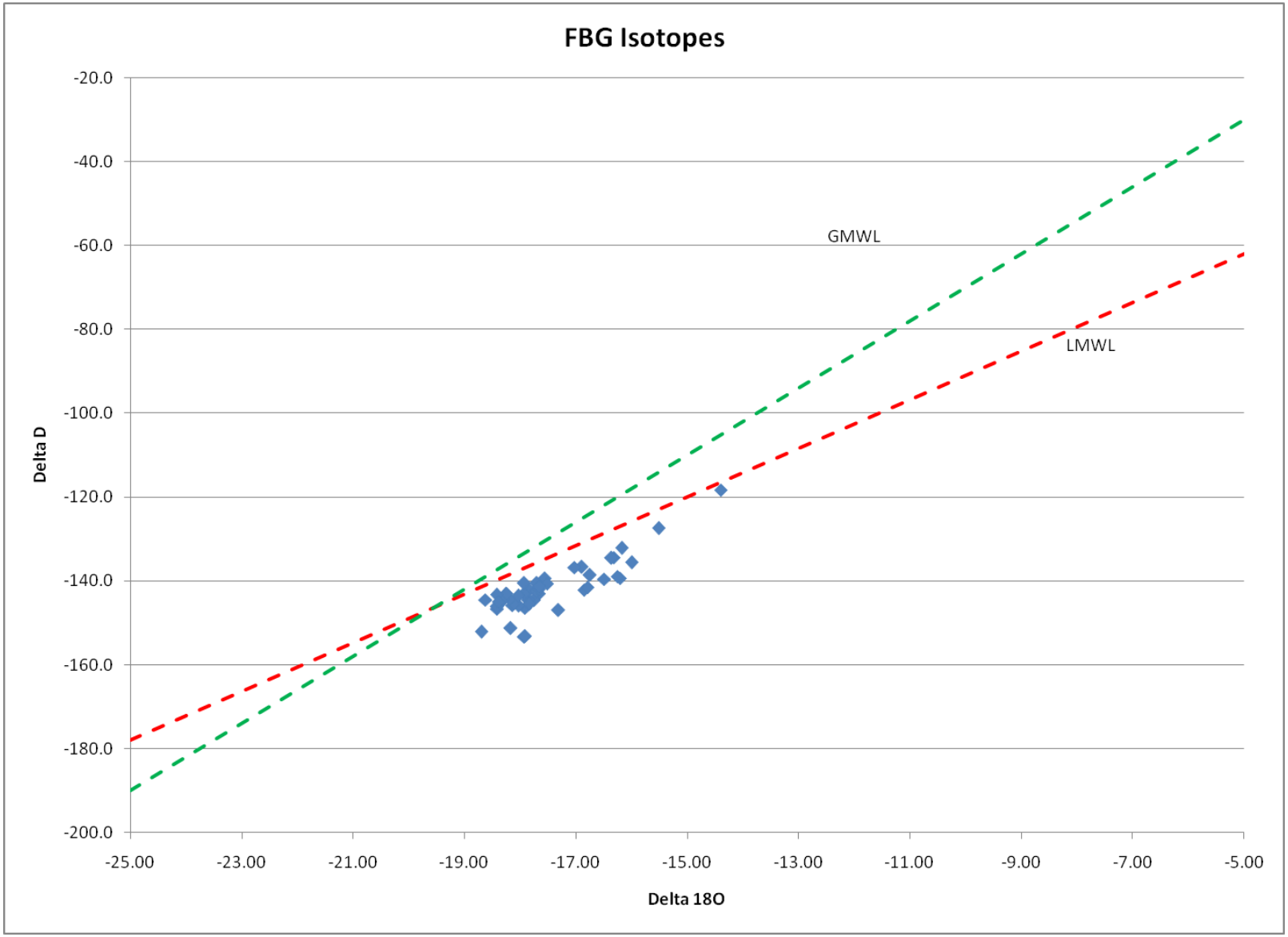

Figure D2. Stable isotope plot of FBG. FBG samples collected from the study area are shifted clearly below the local meteoric water line (LMWL). This suggests that meteoric water was isotopically different when CRBG aquifers were recharged than in modern times.

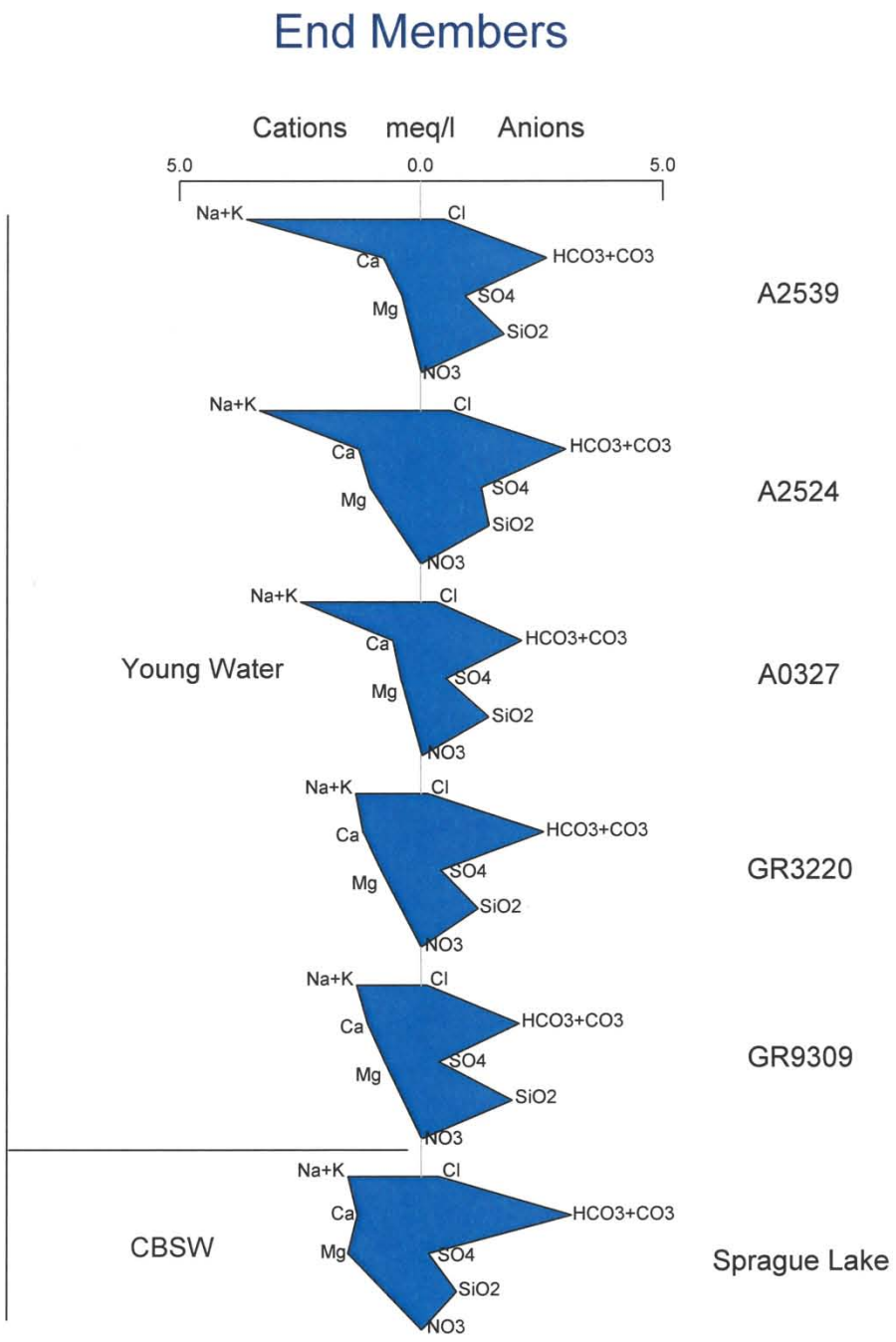

Figure D3. Stiff diagrams from end members indicated in mixed groundwater samples from the GWMA.

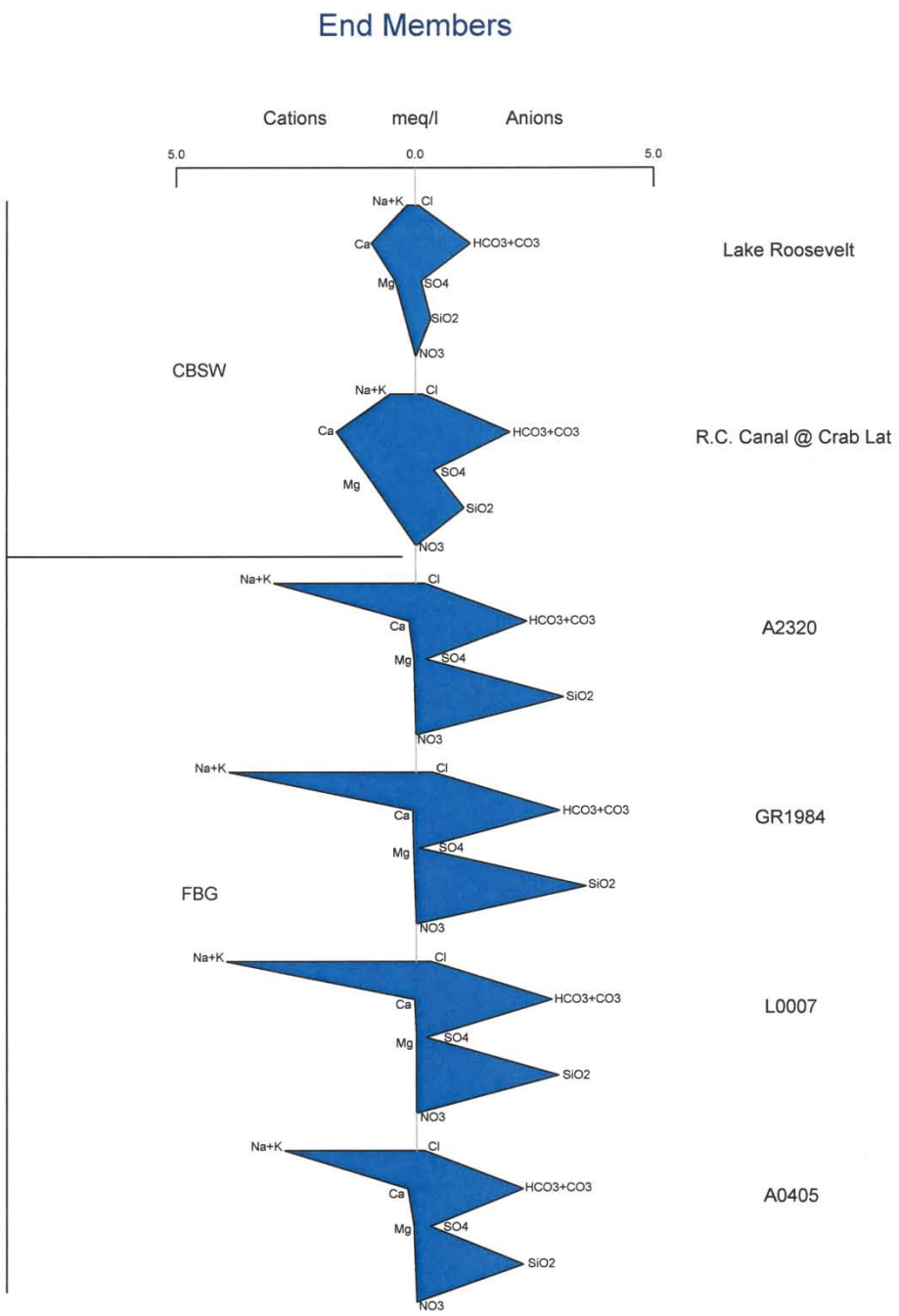

Figure D3. Stiff diagrams from end members indicated in mixed groundwater samples from the GWMA.

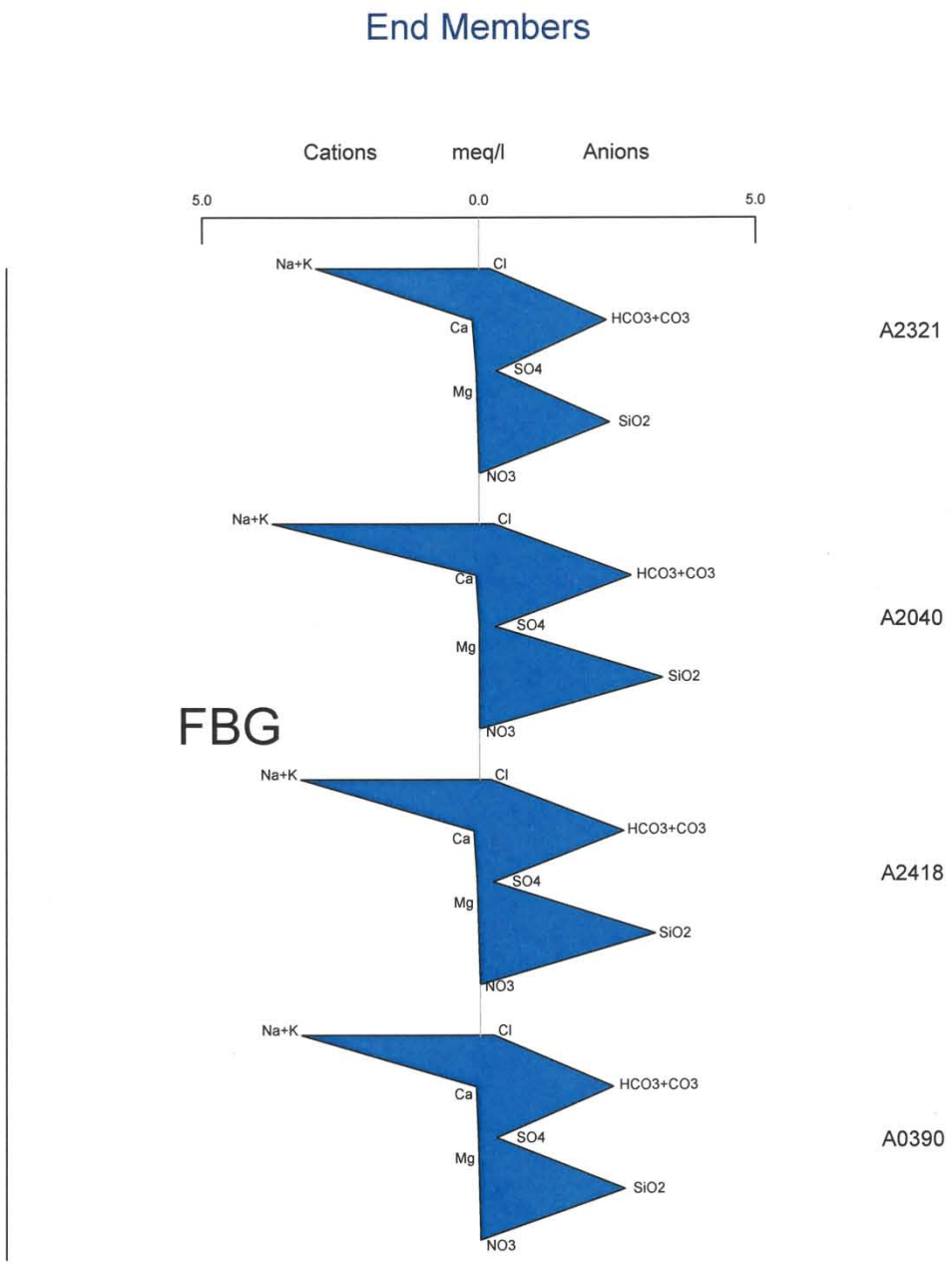

Figure D3. Stiff diagrams from end members indicated in mixed groundwater samples from the GWMA.

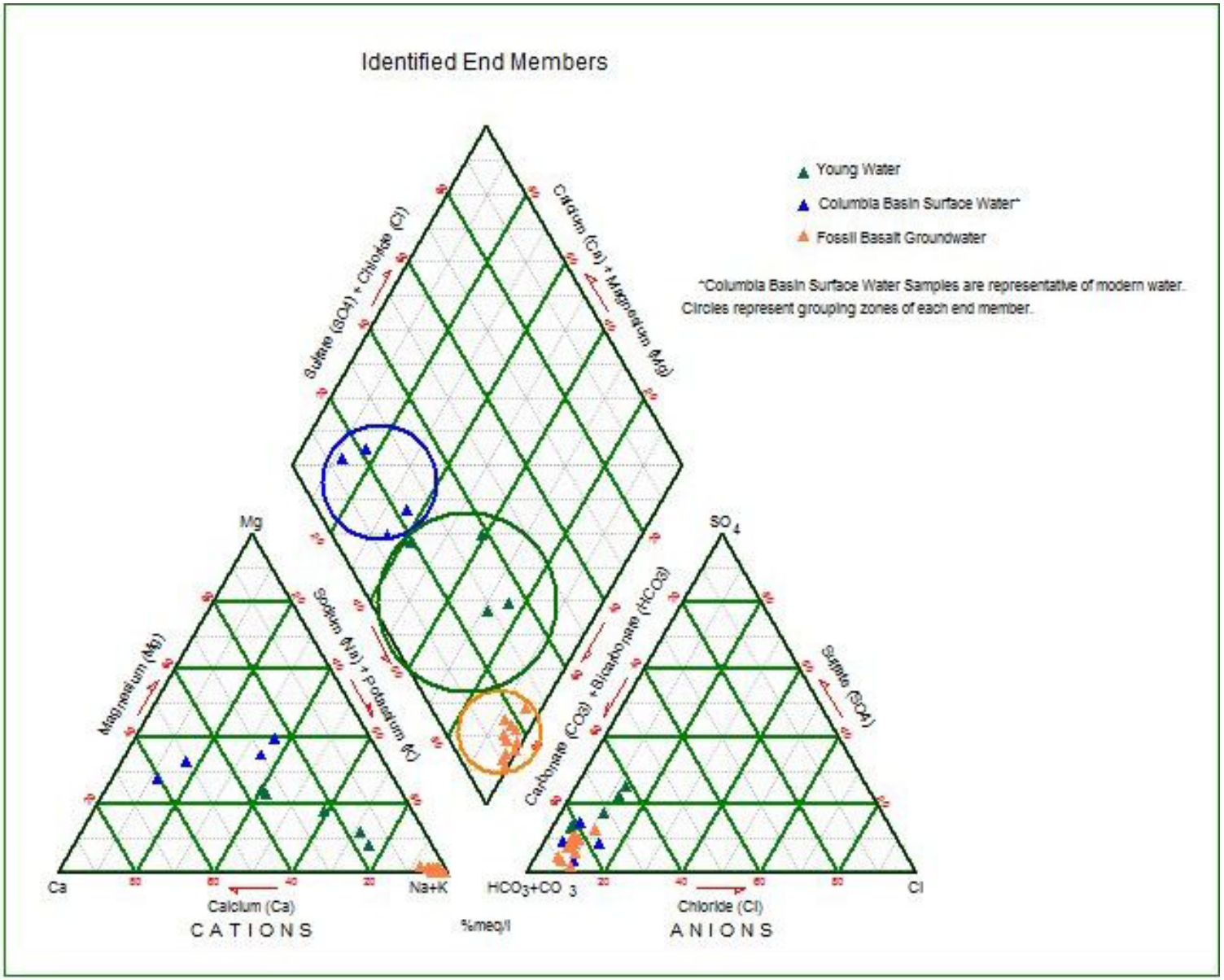

Figure D4. Piper plot of end members indicated in mixed groundwater samples from the GWMA.

Davenport
Stiff Diagrams, Piper Plots and Isotope Plots

Davenport

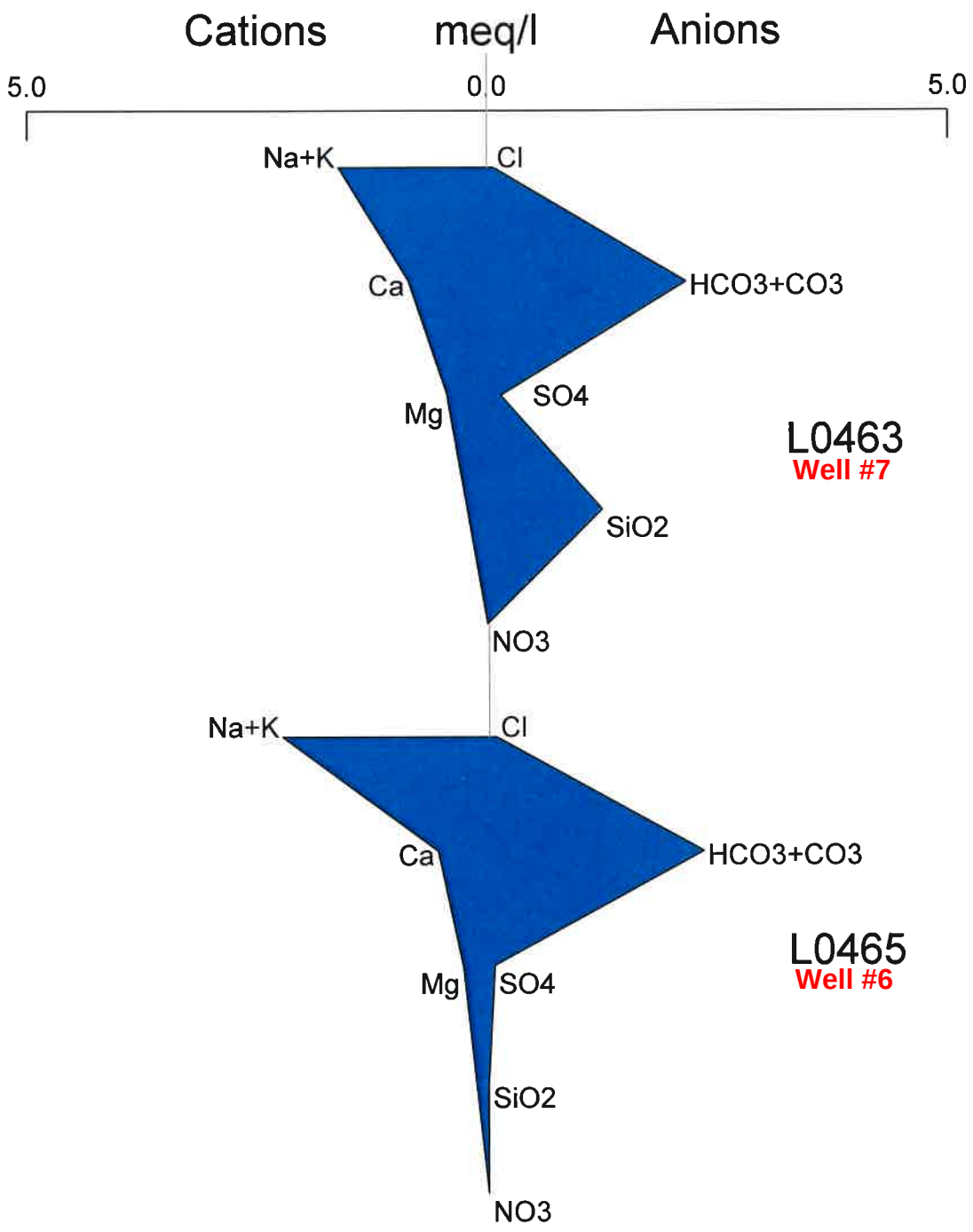
Cations
meq/l
Anions
5.0
0.0
5.0
Na+K
Cl
Ca
HCO3+CO3
SO4
Mg
L0463
Well #7
SiO2
NO3
Na+K
Cl
Ca
HCO3+CO3
L0465
Well #6
Mg
SO4
SiO2
NO3

Davenport

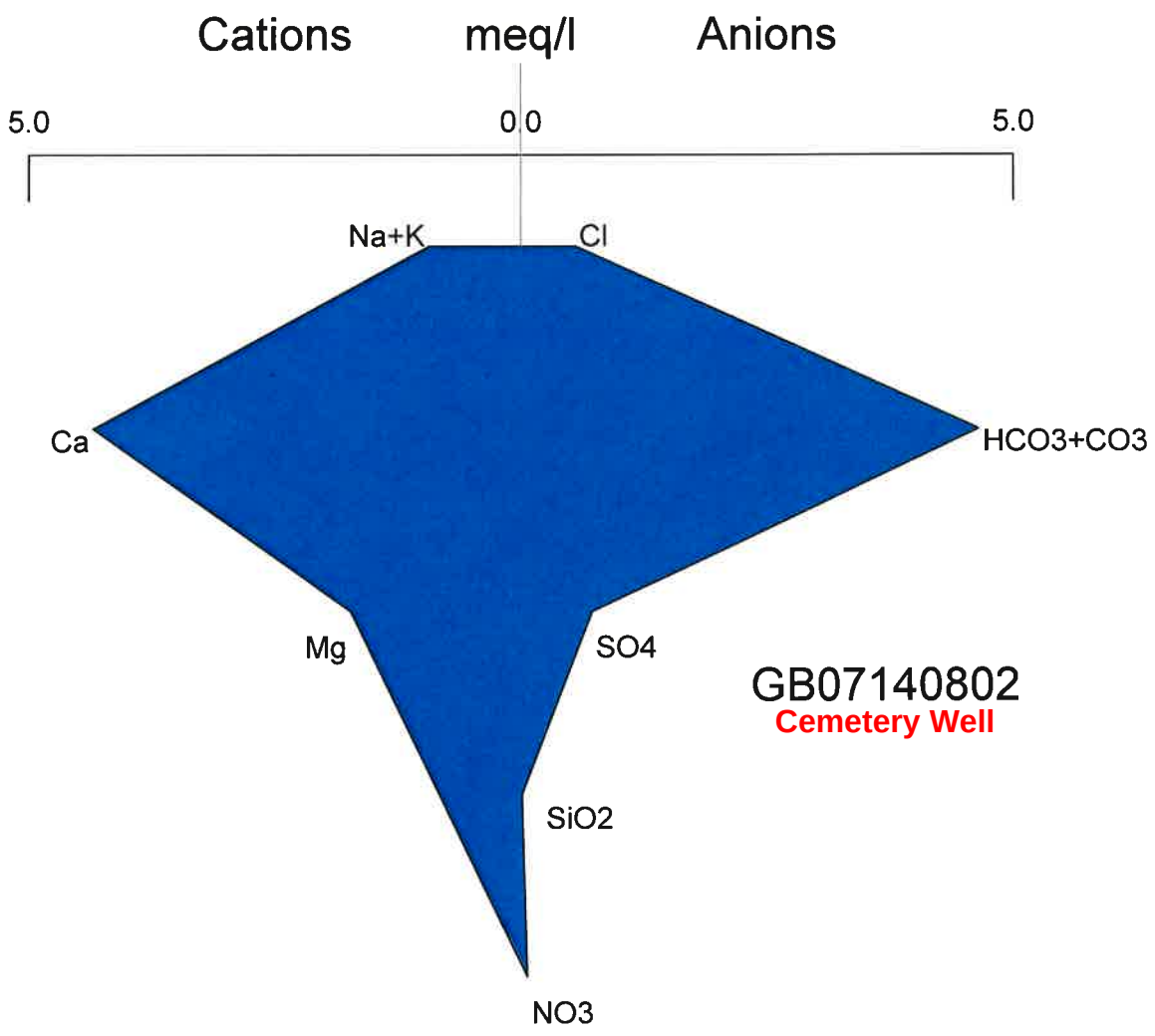
Cations
meq/l
Anions
5.0
0.0
5.0
Na+K
Cl
Ca
HCO3+CO3
Mg
SO4
SiO2
NO3
GB07140802
Cemetery Well

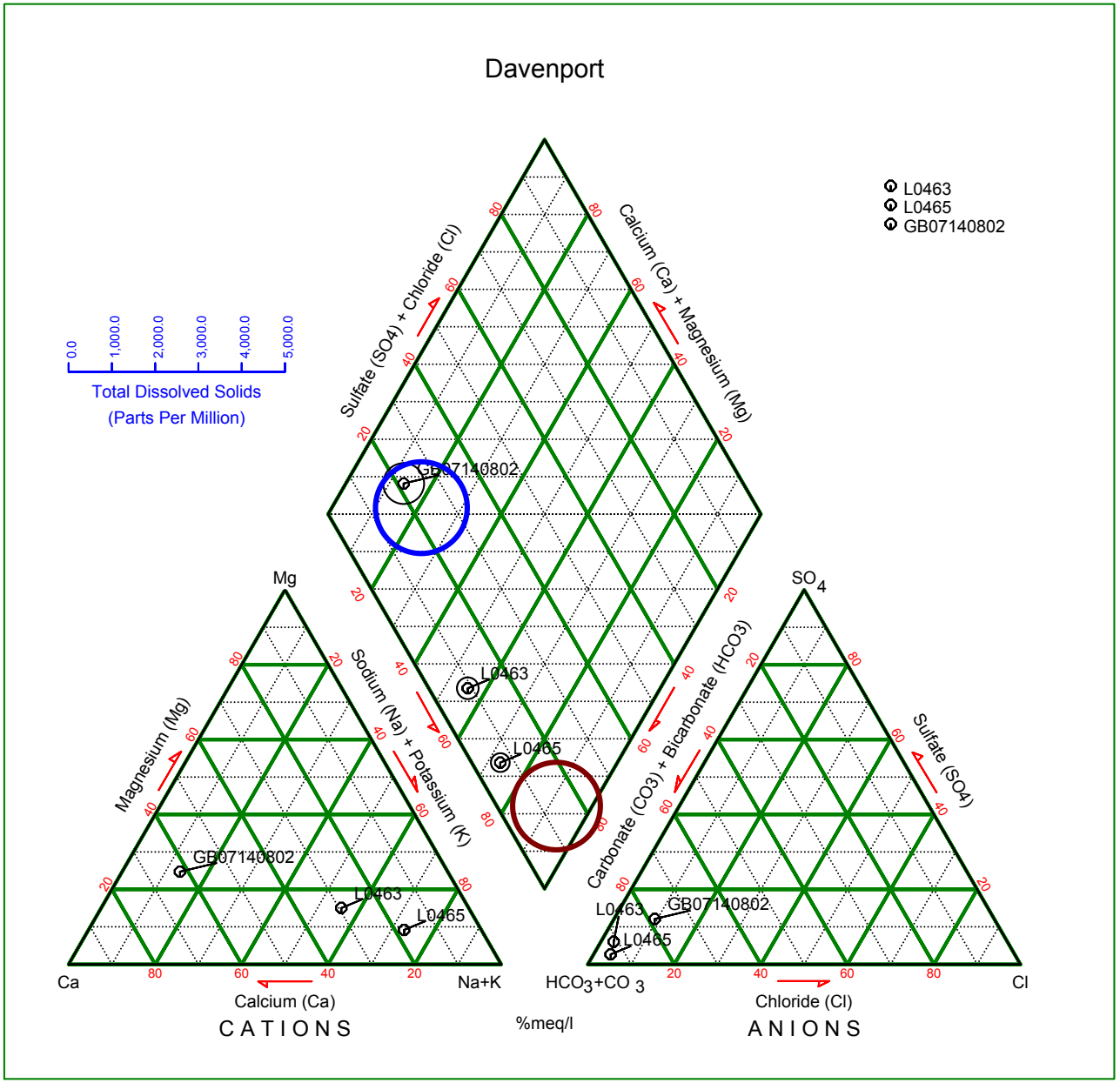

L0463: TU = 0.12, PMC = 5.66%. Cased and sealed to 447 feet bgs. Open to Grande Bond Basalts and basement.

L0465: TU = 0.1, PMC = 8.88%. Cased and Sealed to 445 feet bgs. open to Grande Ronde Basalts.

GB07140802 (Cemetery Well): TU = 4.11, PMC = 97.74%. No construction information available.

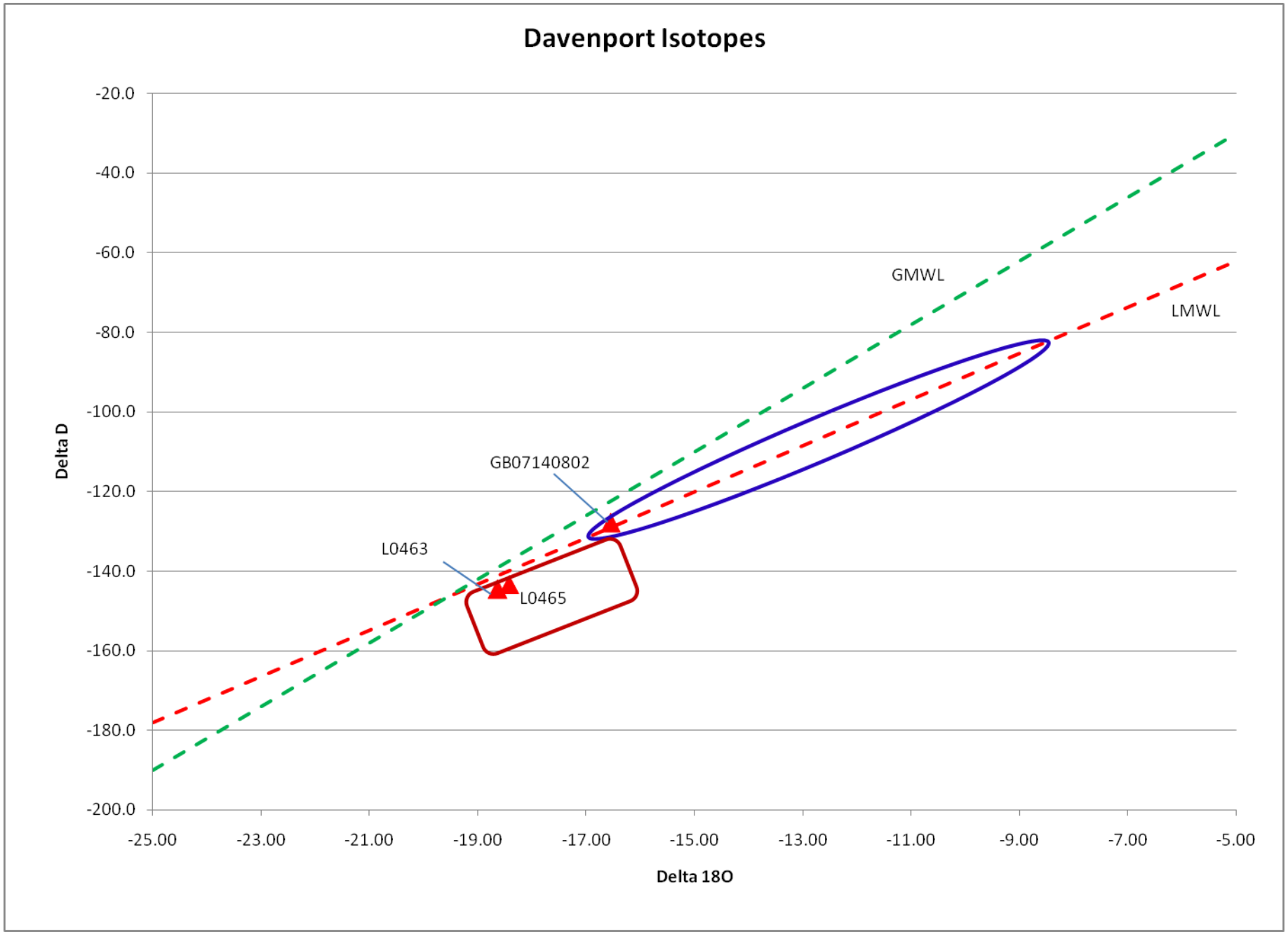
Davenport Isotopes
-20.0
-40.0
-60.0
-80.0
-100.0
-120.0
-140.0
-160.0
-180.0
-200.0
Delta D
-25.00
-23.00
-21.00
-19.00
-17.00
-15.00
-13.00
-11.00
-9.00
-7.00
-5.00
Delta 18O
GMWL
LMWL
GB07140802
L0463
L0465

Columbia Basin Ground Water Management Area Municipal Groundwater Supply Review: Current Conditions and Predicted Future Conditions

Summary Report

Prepared by the

Columbia Basin Ground Water Management Area,

GSI Water Solutions, Inc.,

And

S.S. Papadopoulos & Associates, Inc.

For the

Office of Columbia River, Washington State Department of Ecology

And

Washington State Department of Health

October 2012

Columbia Basin Ground Water Management Area
Of Adams, Franklin, Grant and Lincoln Counties
170 N. Broadway,
Othello, WA 99344
509-488-3409
gwma@cbgwma.org

Columbia Basin Ground Water Management Area
Municipal Groundwater Supply Review:
Current Conditions and Predicted Future Conditions

Contents

Tables 2

Figures 3

Findings 4

- Conditions 4
- Potential Solutions 5

Purpose 7

Current Well Capacity and Projected Future Demand 8

Well Construction 9

Well Hydrogeology 10

Water Level Data 11

Groundwater Geochemistry 13

Potential Future Water Sources 15

- Deep Grande Ronde Basalt Groundwater Source 15
- Shallow Suprabasalt Sediment and Shallow Basalt Groundwater Source 16
- Surface Water Source 17
- Water Reuse 18

Summary 18

Tables

Table 1. Summary of Current Well Capacity and Future Predicted Water Demands in 2030 and 2060
Table 2. Well Construction Summary
Table 3. Well Hydrogeology Summary
Table 4. Summary of Static Water Level Data, Including Observed and Predicted Annual Rates of Change
Table 5. Potential depths of Static and Dynamic Water Levels in 2060
Table 6. Groundwater Geochemistry Summary
Table 7. Summary of GWMA Observations for Municipal Wells

Figures

Figure 1. Locations of Municipalities Evaluated in this Report
Figure 2. Locations of Major Water Bodies and Coulees in GWMA
Figure 3. Locations of Major Folds, Faults, and Dikes in GWMA

Columbia Basin Ground Water Management Area Municipal Groundwater Supply Review: Current Conditions and Predicted Future Conditions

Findings

Conditions

Groundwater is the primary source of potable water for 25 incorporated municipalities in the Columbia Basin Ground Water Management Area (GWMA) of Adams, Franklin, Grant, and Lincoln Counties, Washington. An evaluation of water system plans, well records, water level data, groundwater geochemistry data, and groundwater model outputs reveals that of the shows that most of them are at risk from groundwater supply shortfalls in approximately the next several decades. In these GWMA municipalities, most are predominantly pumping fossil groundwater, even in areas where natural and artificial surface waters are present. Coupled with this, water levels and production rates are declining in most municipal wells, in both surface water irrigated areas and non-irrigated areas. In fact, there are municipal groundwater supply wells within the Columbia Basin Irrigation Project (CBP) which pump some of the oldest groundwater found within the GWMA and are experiencing water level declines.

One hundred and twenty four municipal supply wells evaluated. Of these wells, six pump from the suprabasalt sediments, none are pumping from the Saddle Mountains Basalt, eleven pump from the upper Wanapum Basalt (Priest Rapids/Roza), fifteen pump from the lower Wanapum Basalt, eighteen pump from the Sentinel Bluffs Member of the Grande Ronde Basalt, twenty pump from the entire Wanapum Basalt, and thirty-six pump from a combination of the Wanapum Basalt and the Grande Ronde Basalt. Twenty-two of the 124 municipal wells evaluated were found to be decommissioned or non-operational. These wells generally were taken out of production because of poor water quality, physical deterioration of well infrastructure, or water production shortfalls. For the 102 operational wells GWMA used data supplied by the municipality, collected for this project, or publically available to evaluate groundwater supply conditions. From this evaluation several risk factors were identified that suggest most wells and municipalities in the GWMA will experience water production shortfalls in the next several decades. These risk factors include: (1) static and dynamic groundwater level decline rates in excess of 2 ft/year; (2) dynamic drawdowns of over 100 feet; (3) current and predicted static and dynamic water levels dropping below 700 feet below ground surface; (4) groundwater geochemical data that indicates wells are pumping fossil groundwater with little or no modern recharge; and (5) projected future water demand that exceeds current pumping capacity by 2030.

Where pumping and water level information was available GWMA found the following. Thirty-three of 76 wells with pumping tests have drawdowns over 100 feet, suggesting either well or aquifer limitations on water production. Thirty-three of 84 wells have historical and/or model predicted water level decline rates exceeding 2 feet/year, indicating aquifer storage depletion is occurring. Fourteen of 57 wells with water level and pumping test data suggest predicted future drawdowns that will meet or exceed 700 feet below ground surface in the next several decades. Based on groundwater geochemical data collected from 75 wells, 1/3 are pumping fossil groundwater, ¼ are pumping predominantly modern groundwater, and the rest are pumping mixed, but fossil dominated groundwater. The average C-14 age of the water sampled from municipal wells inside GWMA is 9,168 years, with a median age of 7,020 years and a maximum age in excess of 26,000 years. Geochemical and isotopic data (including percent

modern carbon, tritium, and cation-anion data) show that the majority of the wells pumping these older waters are not seeing modern recharge. Taking all of these factors together GWMA finds that of 97 wells with data for one or more of the risk factors, 18 of them have display one factor, and 35 of them display two or more. Coupling these risks with predicted future water demands, we find that at least half of the municipalities in GWMA will likely not meet their water production targets by approximately 2030.

Placing these wells into the hydrogeologic context we find the wells with the greatest number of risk factors are in the central GWMA, and in portions of GWMA bound by geologic features that inhibit lateral and vertical groundwater movement, thus restricting recharge. Declines in groundwater levels and accompanying production rates from municipal supply wells are interpreted to be directly tied to two important factors: (1) the general lack of significant, modern recharge to the portions of the aquifer system being pumped and/or (2) where modern recharge is present, pumping rates exceeding recharge rates. The few wells that do not appear to be at risk generally are shallow, near surface water sources, and/or in highland areas around the fringe of the GWMA. Future water needs in the Columbia Basin GWMA will not be met solely by groundwater.

Potential Solutions

Municipal and non-municipal wells inside GWMA show a combination of (1) water level declines, (2) geochemical parameters indicative of fossil water, and (3) no evidence in many areas of modern recharge. These data, taken together, provide a strong indication that pumping is exceeding the rates of natural and artificial recharge and that, subsequently, groundwater mining is occurring. As this continues, municipalities inside GWMA will face increases in pumping costs. Also, in many cases, water treatment costs will rise as municipalities pump older and older water as time goes on, with the increased age of the water correlating with increased temperature and increasing concentrations of fluoride, iron, manganese, sulfide, and temperature. For those few municipalities that are currently pumping younger and generally rechargeable groundwater, the outlook generally is positive as long as pumping demand is less than recharge rates. However, for most of the municipalities inside GWMA (who are facing declining water levels and increased production of old and highly mineralized groundwater), several possible solutions exist, both in the long and short terms.

- **Short-Term.** In the short term, and historically, the primary solutions to diminished groundwater supply have been to drill and pump more wells and/or drill wells deeper. Based on the data summarized herein, GWMA concludes that these are short term solutions. They might buy a municipality the time needed to find, or gain access to, other water sources. However, additional deep wells and well deepening is not viable in the long term because recharge of these deeper aquifer systems takes thousands of years, and pumping in excess of this slow recharge rate results in mining of the groundwater resource. In addition, generally, as wells in the region go deeper into the basalt aquifer system natural water quality degrades, potentially requiring treatment at some point in the future.

- **Long-Term.** Based on GWMA's assessment to-date, there are potentially three basic long term solutions that could replace or mitigate the current groundwater mining scenarios we are seeing. These potential solutions are (1) the use of rechargeable alluvial or shallow basalt groundwater, (2) utilization of natural and/or artificial surface water supplies, and/or (3) reuse of treated waste water. While this review does not look at the permits, regulations, and related authorizations needed to access these alternative sources (and these are many and in need of

resolution) it does look at the potential physical accessibility of these alternative sources. The biggest physical challenge with these sources will be the need to construct the infrastructure needed to divert, deliver, treat, and, if necessary, store this water. Most municipalities inside GWMA potentially have access to one or more of these sources.

- When considering ***shallow, rechargeable groundwater supplies***, municipalities will need to find existing wells that show evidence that such supplies exist, what their recharge conditions look like, and what the sustainable pumping rates may be. If these can be found to meet potential future supply needs, GWMA recommends that municipalities explore the acquisition of these wells and associated water rights, and convert these water rights to municipal use. With these sources though, a municipality considering their use should pay particular attention to potential contamination sources tied to surface activity. A highly productive, but contaminated, shallow aquifer would require treatment before it can be devoted to potable use.

- ***Surface water*** in the GWMA is found in the form of the CBP and a small number of natural streams, most notably the Columbia River, Snake River, Palouse River, Crab Creek, and Cow Creek. While the CBP only operates seasonally, it may have the potential to supply: (1) untreated water to a municipality for irrigation water supply (for lawns, gardens, and sports fields) and direct industrial uses, (2) potable water during peak demand periods (though this would require treatment [primarily disinfection]), and/or (3) aquifer storage and recovery operations to replace depleted groundwater supplies and/or improve naturally poor groundwater quality via mixing. In each of these basic scenarios CBP water could be used to either replace a depleted source or reduce the use of groundwater for activities that do not necessarily require potable water. Naturally occurring surface water could also supply similar needs if access to these streams by a municipality could be secured.

- ***Water reuse*** is a possible future source of water for some municipalities inside GWMA. Water reuse would involve the use of treated waste water for irrigation or other needs, to reduce demand on potable aquifer sources. Treatment costs will depend on the condition of the source water. Generally, larger municipalities and/or those having a large waste water stream related to industrial, primarily food processing, activities probably have the best economic conditions for installation and operation of a reused water system. While such a system may not completely replace a declining groundwater resource, it may reduce declines to the point that a municipality has one to three decades of groundwater supply, decades during which alternatives can be developed.

In addition to the activities that municipalities can undertake to improve the long-term viability of their groundwater supplies, regional groundwater management solutions can also play a role. One approach consists of ***reducing groundwater-supplied irrigation pumping*** to reduce stress on the aquifer system and provide a corresponding reversal or slowing of the rate at which water levels in municipal wells are declining. Concurrent with this study, GWMA has been asked about the potential benefits that might accrue to groundwater levels and groundwater supply if agricultural groundwater pumping were to be reduced in the U.S. Bureau of Reclamation's Odessa Special Study Area as is described in a recently completed Environmental Impact Statement (EIS). In some areas, decline rates at municipal wells will be reduced as this irrigation pumping accounts for well over 90% of local area groundwater pumping.

However, in many areas of GWMA this likely will have a minimal influence on groundwater decline conditions because of the following factors and observations:

1. Currently proposed regional reductions in irrigation pumping could result in an approximately 160,000 to 200,000 acre-foot annual reduction in groundwater withdrawals. However, this reduction in annual groundwater pumping may account for no more than 1/4 to 1/3 of the total groundwater pumping in the GWMA region. In the absence of recharge, declines will continue in most areas.

2. Compartmentalization of the aquifer system – both laterally due to folds, faults, and dikes, and vertically (because the aquifer system is stratigraphically layered) – will limit the influence of reduced groundwater withdrawals. Water level declines will be most influenced by reduced groundwater pumping in those areas of the GWMA having a high degree of hydrologic connectivity with adjoining areas where pumping is reduced.

3. Many GWMA municipalities, even those located within the CBP, are in close proximity to extensive surface irrigation and as such these areas will see little or no reduction in groundwater pumping. GWMA has found that many of these same municipalities are already pumping fossil groundwater and seeing declining groundwater levels. As such, there seems to be little likelihood that reductions in groundwater pumping in areas distal from these municipalities will benefit municipalities in areas within the CBP that already sees water level declines and evidence of pumping of fossil groundwater.

Finally, GWMA municipalities could look into ***conservation*** based solutions. This report does not explore this option further, other than through a very brief look at water reuse, as it was deemed to be beyond GWMA's current scope.

Purpose

The purpose of this report is to review basic information and issues associated with current groundwater supply conditions for 25 municipalities within the Columbia Basin GWMA (Figure 1). This review is based on GWMA data and information developed during previous projects, information collected from the public works and/or other municipal personal, data available from the Washington Department of Health (WDOH), and data and information published or compiled by others, including the Washington Department of Ecology (ECOLOGY). This review also looks at predictions about future groundwater conditions that have been developed using GWMA's groundwater flow model for the Columbia River basalt aquifer system. This report also includes a general summary of several future potential water supply alternatives, although it does not look at conservation options.

This review is not meant to be a comprehensive evaluation of current and future groundwater supply conditions. Instead, it is meant to provide a general picture of current and potential future conditions. This report does not look at water rights or other legal issues that would need to be resolved to gain access to many potential future alternative water supplies.

GWMA prepared this report under a funding authorization from the Washington Legislature directed through ECOLOGY's Office of the Columbia River. Topics covered in this review include summaries of:

1. Current well capacity and projected future demand (Table 1).

2. Well construction (Table 2).
3. Groundwater supply sources, including aquifer identification (Table 3).
4. Water levels in municipal supply wells (Tables 4 and 5).
5. Groundwater geochemistry and age (Table 6).
6. Potential future water supply options.

In many of these summaries GWMA identifies one or more ***risk factor*** that signifies potential concerns about future water production for specific municipalities and/or wells. We identified multiple risk factors because we found that the incomplete nature of existing municipal well data within the GWMA results in an incomplete picture of well and aquifer performance. Given that, use of multiple risk factors allowed us to more completely scrutinize hydrogeologic conditions for GWMA municipalities than would have otherwise been the case if we focused on one factor. ***These risk factors include:***

- Future projected water demands (Table 1) that exceed current pumping capacity in a given municipality.
- Pumping test drawdown in excess of 100 feet (Table 3).
- Historical and/or model predicted future water level decline rates exceeding 2 feet/year (Table 4).
- Predicted potential static and/or dynamic water levels in 2060 that are greater than 700 below ground surface (Table 5).
- Groundwater geochemical data that indicates wells are pumping fossil groundwater that shows little to no evidence of modern recharge (Table 6).

In the report summary, we compile all of these risk factors into a single table (Table 7) to illustrate our basic conclusions.

In the northern and northeastern portions of the GWMA the municipalities included in this assessment are Almira, Creston, Davenport, Harrington, Reardan, Ritzville, Sprague, Wilbur, and Wilson Creek. In the central and eastern GWMA the municipalities included in this assessment are Connell, Hatton, Kahlotus, Lind, Mesa, Moses Lake, Odessa, Othello, Warden, and Washtucna. In the northwestern GWMA municipalities included in the assessment are Ephrata, George, Quincy, and Soap Lake. Finally, in the southwestern GWMA two municipalities were evaluated, Royal City and Mattawa.

Current Well Capacity and Projected Future Demand

The goal of this section is to explore the risk factor associated with current capacity and future demand. This is done using basic information about reported well pumping capacity of existing municipal groundwater supply systems in the GWMA, and comparing that information to what potential future water demands may be for each of the 25 municipalities summarized in this report. This is done in Table 1, which tabulates, by municipality, current reported primary pumping capacity for each system and projected potential water needs in the years 2030 and 2060. The potential water needs are based on growth rates reported in water system plans, information from individual system operators, and/or information from the engineering consultants currently working for specific municipalities.

Comparing estimated water demand and growth predictions for the years 2030 and 2060 with current reported well pumping capacity for each municipality, ***and assuming the water production capacity of current, replacement, and/or backup wells stays at or near the reported current capacity,*** the current

pumping capacity of 13 of the 25 municipalities evaluated appears to not be sufficient to meet projected future needs. Specifically:

- Connell, Ephrata, Kahlotus, Mesa, Moses Lake, Othello, Quincy, and Washtucna have predicted water demands that will essentially meet, or exceed current reported well pumping capacity by 2030.

- Mattawa, Royal City, and Warden have predicted water demands that will essentially meet, or exceed current reported well pumping capacity by 2060.

- Lind and Ritzville, on paper at least, have reported capacity that should meet future demands. However, excessive drawdown reported in primary water supply wells in 2012 suggests existing system capacity is deteriorating faster than previously anticipated.

As highlighted above, these demand forecasts are predicated on the assumption that well pumping capacity will not deteriorate over time. As conditions in Lind and Ritzville have shown in 2012, this is an extremely optimistic assumption. Given that, continued groundwater pumping in any part of GWMA could accelerate future groundwater level changes that could expose nearby municipalities to reduced groundwater pumping capacity.

Well Construction

Although not identified directly as a critical risk factor, well construction does influence the other risk factors. The goal of this section is to summarize basic well construction information for municipal water supply wells within the GWMA.

There is no typical municipal water supply well construction configuration in the GWMA. Water supply wells used by the municipalities included in this report display a range of constructions and configurations. These are compiled in Table 2, and summarized below.

Of the 124 municipal water supply wells included in this assessment, GWMA has construction information for all but 9 of them. Of these 115 wells their average age is approximately 45 years, with the oldest well reported to date back to 1903 and the youngest having been drilled, or modified, in 2012. The median drilling year for these wells is 1964. Twenty-two of the 124 municipal supply wells are no longer in use, although most have not been decommissioned, but rather remain in place for potential back-up or emergency use.

With respect to casing and seal, 26 wells do not have any reported casing and 65 do not have reported seals (although in both cases they may be present, just not reported). The depths of these wells vary widely, with the average depth being approximately 675 feet, the median depth being 670 feet, the shallowest being 25 feet, and the deepest being 2034 feet. In the northern GWMA the deepest wells are less than 1000 feet deep, while in the southern and western GWMA there are 21 wells (of the 124) over 1000 feet deep. This increase in the number of deep wells likely reflects a need for greater production because of greater population, industrial demand, and/or agricultural irrigation demand.

Well Hydrogeology

The layered nature of the Columbia River Basalt Group (CRBG) aquifer system exerts a significant influence on groundwater occurrence, availability, and continuity. The majority of water produced from municipal supply wells inside GWMA comes from the tops and bottoms ("interflow zones") of the basalt flows (or layers) the wells are open too. The intervening dense, crystalline to glassy, basalt flow interiors tend to contain little, if any, groundwater and thus do not support groundwater supply development. Given the layered nature of the basalt aquifer system, wells open to the same interflow zone(s) will display increasing degrees of hydraulic continuity / connection as their spacing decreases, unless an intervening geologic structure disrupts this continuity. Conversely, wells that are not open to the same interflow zone(s) will display little, to essentially no, hydraulic continuity. Additionally, interflow zones separated by several dense flow interiors also will display little to no direct evidence of hydraulic continuity. Within the GWMA, evidence for minimal hydraulic continuity between many portions of the basalt aquifer system includes:

1. Different responses to pumping displayed by closely spaced wells.
2. Differing short term and long term trends seen on hydrographs.
3. Groundwater geochemical differences displayed by samples from different wells.
4. Cascading water in wells.
5. Up-hole and down-hole flow in wells coupled with the presence of thief zones.

Based on the results of GWMA's earlier work we generally identify major groups of units more or less acting as hydrogeologic, or hydrostratigraphic, units. As used in this report, these are, from shallowest to deepest, the suprabasalt or alluvial sediments, the Saddle Mountains Basalt, the Priest Rapids and Roza Members of the Wanapum Basalt, the Frenchman Springs Member of the Wanapum Basalt, the Sentinel Bluffs Member of the Grande Ronde Basalt, and deeper Grande Ronde Basalt members. The lateral continuity of these units is affected by coulees, folds, faults, and dikes all of which act, to a greater or lesser degree, to limited lateral hydrologic connections in the GWMA. Figures 2 and 3 show the locations of the major coulee systems and fold, fault, and dike systems, respectively, that influence this lateral continuity regionally.

Municipal wells inside GWMA display a range of hydrogeologic characteristics. However, some basic patterns do emerge:

- In the northern and northeastern portions of the GWMA most municipal water supply wells are open to the upper Wanapum Basalt (Priest Rapids and Roza Members) and/or the upper Grande Ronde Basalt (Sentinel Bluffs Member).

- In the central, eastern, and northwestern portions of GWMA, municipal wells are open to a variety of hydrogeologic units that might or might not include the suprabasalt sediments, the Wanapum Basalt, and the Grande Ronde Basalt. In the Grande Ronde Basalt, although the upper portion of this is usually targeted by municipal supply wells, several wells extend significantly deeper into much older and thicker basalt flows. The installation of municipal supply wells to these great depths is likely influenced by production needs, with high production demands commonly leading to the construction of the deepest of the region's municipal supply wells.

- In the southwestern GWMA most wells are completed in Wanapum units that supply most production demands, and the Grande Ronde is extremely deep. It is notable that throughout

the southern GWMA where the Saddle Mountains Basalt is present, it is not generally a target for municipal well water production.

- With respect to the suprabasalt sediments, these strata are only a significant source of municipal water supply in a limited number of cases where they are coarse grained, a nearby surface water source is present, and municipal pumping demands are relatively modest.

From Table 3, municipal wells inside GWMA for which we have information show the following basic characteristics:

- Only 6 are open to the suprabasalt sediments, none are pumping from the Saddle Mountains Basalt, 11 are open to the upper Wanapum Basalt, 15 are open to the lower Wanapum Basalt, 20 are open to the entire Wanapum Basalt section, and 18 are pumping from the Grande Ronde Basalt.

- Thirty-six municipal wells are interpreted by GWMA to be open to a combination of both the Wanapum Basalt and the Grande Ronde Basalt.

- While there are no significant trends in the distribution of productive and unproductive wells, some very basic observations include:

    - Wells in the northern and eastern GWMA rarely produce in excess of 1000 gallons per minute (gpm). While this might reflect hydrogeologic conditions, it may also simply be a reflection of the small town size in this region.

    - Most wells in the central and eastern GWMA are reported to be able to produce in excess of 1000 gpm with a wide range of draw-down response, ranging from less than 10 feet to approximately 300 feet.

    - In the northwestern and southwestern GWMA a range of conditions similar to those noted for the central and eastern GWMA seem to be in play.

The average GWMA municipal well pumps approximately 1100 gpm, has a dynamic (or pumping) drawdown of 106 feet, and has a specific capacity of 24.5 gpm per foot of drawdown. However, as highlighted in Table 2, ***for the 76 wells for which GWMA has pumping test data, 33 of them report pumping (or dynamic) drawdown in excessive of 100 feet,*** with several over 300 feet. GWMA identifies such pumping test drawdowns as a ***risk factor***. These drawdowns are a potential risk factor because: (1) they are a potential indicator of wells and/or locations that are potentially most at risk to future water level declines and (2) these tests are almost never repeated as water level declines progress. If they were, GWMA suspects that many wells no longer have the pumping capacity they did at the time they were constructed.

Water Level Data

Water level data, especially when coupled with pumping data, provides information useful in determining well performance and aquifer conditions, including the presence or absence of hydrologic connection between different wells. When referring to water level data one should look at both ***static and dynamic (pumping)*** levels.

- The static water level is the water level in a well when it is not being pumped.
- The dynamic water level is the water level in a well when it is being pumped.

The difference between static and dynamic (pumping) water levels is referred to as ***drawdown***. Understanding drawdown is important for maintaining sustainable operation of a well, because pumping (or dynamic) conditions resulting in drawdown that brings the dynamic water level to depths near the pump will reduce the efficiency of the well and the pump, potentially damage the pump, and ultimately reduce the ability of the combined well-pump system to produce water.

From GWMA's data collection efforts with the municipalities, it is apparent that water level data is not collected systematically by most municipalities. Although a few municipalities do have extensive data sets, most do not. As a consequence, it is difficult to track well and aquifer performance changes over time. Of the 124 municipal wells evaluated by GWMA, multiple water level measurements were only found for 55 wells (Table 4).

The majority of these 55 wells display evidence of declining water levels over time. Specifically:

- 46 of the 55 wells display evidence of declining static water level. The other 9 appear to have unchanged water levels, while several of these have seen rising water levels.

- The average annual rate of change in static water levels from year to year is approximately 2.5 feet/year of decline, with a median rate of decline of approximately 1.9 feet/year.

- The maximum observed rate of change is 16.8 feet/year of decline in the static water level.

- The GWMA hydrogeologic model predicts that the rate of change in groundwater levels for the next 20 to 30 years will average approximately 1.7 feet/year of decline, with fewer wells having stable or rising water levels than is seen in the historical data.

The presence or absence of nearby surface water (natural or artificial) does not appear to have a significant influence on decline rates, in that, declining water levels are common with or without nearby surface water. This is reflected in modeling outputs which show that water level declines in the basalt aquifer system, even in the presence of nearby surface water, will continue into the future is groundwater pumping trends continue. ***Based on the historical data, and the model generated predictions, 33 of the 84 wells with water level data and/or predictions have water level decline rates in excess of 2 feet/year.*** GWMA interprets these decline rates as ***risk factors*** suggestive of:

1. Potential wells and/or locations that are likely most at risk to future water level declines.

2. Wells that likely have declining dynamic, or pumping, water levels that are dropping even faster.

GWMA also has taken the observed and predicted rates of change in water level (Table 4) and reported drawdown information from well pumping tests (Table 3) to make an assessment of potential future water levels in municipal wells in the year 2060 (Table 5). These predicted future potential water levels represent another ***risk factor*** in our assessment of municipal well conditions. This assessment ***assumes that the currently reported pumping drawdown of specific wells remains unchanged into the future***. Given observed and reported production declines seen in GWMA wells in recent years, this assumption is very optimistic, representing a best case scenario for potential static and dynamic water levels in 2060. Based on the anecdotal observations of GWMA, and others, including reported groundwater

production problems at Lind and Ritzville, we currently expect water levels in 2060 to be deeper than estimated here.

For this portion of our assessment we identify ***future estimated water levels below approximately 700 feet as the risk factor***. This is used because at these depths one starts seeing pumps placed over 700 feet below ground surface, resulting in increased capital, maintenance, and operational costs. Based on this approach GWMA identifies 15 wells (of the approximately 60 for which we have data) that will have static and/or dynamic water levels of approximately 700 feet bgs, or greater. These wells are highlighted on Table 5. GWMA recommends that these wells be paid particular attention to as these may be the wells to experience extreme water level declines and groundwater production shortfalls in the next several decades.

It is interesting to note that historical water level declines have occurred in municipal water supply wells across the GWMA, even when wells are in close proximity to natural or manmade surface water bodies such as the Columbia Basin Irrigation Project (CBP). Such observations would imply that to date, recharge of the groundwater systems being pumped by most GWMA municipal wells is not keeping pace with withdrawals. The only areas where water level declines do not appear to be pervasive are those where low pumping demands are the rule, such as on the fringes of the GWMA and in those few locales where well construction appears to provide a hydraulic connection with surface water sources.

Groundwater Geochemistry

Groundwater geochemical data can be useful in determining the recharge source, age of recharge, and mixing of different sources of water. Examples of how GWMA's groundwater geochemical data are used include the following:

- C-14 age provides a measure of the average age of when the groundwater system being sampled was recharged. Percent modern carbon (PMC) provides an indication of the prevalence of older or younger waters in the sample, with lower values indicating lesser modern water content.

- Stable isotopes of oxygen ($^{18}O/^{16}O$) and hydrogen (deuterium/hydrogen, or D/H) can be used to identify the presence of specific water quality end members that may comprise a groundwater sample that is a mixture of younger and older waters. Because the isotopic signatures of end members are consistent, if a mixed groundwater is known to contain certain end members, then the contributory percentages of each end member can be back-calculated for a given mixed groundwater sample. Basic isotopic signatures are:

    - For modern water, delta D is greater than -140/ml and delta ^{18}O is greater than -17/ml.

    - For ancient, or fossil, groundwater, delta D is less than -120/ml and delta ^{18}O is less than -15/ml.

- Tritium units (TU) are a measure of tritium prevalence in groundwater, with those samples having TU over 0.5 generally having some modern component. Generally, the higher the TU, the greater the abundance of modern water in the sample. A TU value of less than 0.1 indicates that essentially no modern water is present.

- Molar equivalent values (meq/l) provide additional information about the presence of modern water versus older water.

    - High meq/l values for sodium and potassium (Na+K) and silica dioxide (SiO_2) – coupled with low values for sulfate (SO_4), calcium (Ca), and Magnesium (Mg) – generally suggest very old groundwater.

    - Opposite trends generally indicate younger to modern groundwater.

Using these different geochemical data sets, GWMA has evaluated the potential age of the source(s) of groundwater being pumped from sampled wells and placed each sample into broadly defined categories reflecting the dominant recharge age of the sample. The potential recharge age of this groundwater is the next ***risk factor*** looked at in this evaluation. In addition, the evaluation looked at potential mixing of different aged sources, including which of the sources may dominate the sampled water. Generally, the ranges of ages identified in this evaluation include:

- **Modern** – groundwater that has been recharged is in approximately the last 60 to 65 years old.

- **Geologically young, or pre-modern** – groundwater that was recharged prior to the 1940's, but could be hundreds to several thousand years old.

- **Ancient** (or fossil) – groundwater that was recharged predominantly during the Pleistocene, or early Holocene, essentially prior to approximately 10,000 years ago. This also is referred to as fossil groundwater.

- **Mixed** - includes mixed groundwater derived from multiple water sources that are of different ages. Where GWMA interprets groundwater sources to be mixed, we attempt to identify which aged source predominates, if possible.

Groundwater samples were collected from 77 of the 124 municipal wells evaluated for this effort (Table 6). Based on these samples the average C-14 age of groundwater pumped from these wells is approximately 9200 years and the median age is approximately 7,000 years. Combining the C-14 age, PMC, TU, hydrogen isotope, oxygen isotope, and cation/anion data, most of the 77 wells are pumping groundwater that has little or no modern recharge. Basic observations relative to the age of groundwater recharge are as follows:

- 26 of 75 samples are exclusively too predominantly fossil, or ancient. This type of water is considered to be a ***risk factor*** when it comes to assessing future groundwater production potential.

- 18 of the 75 samples are predominantly modern, although many of these contain a small fraction of ancient water in them.

- The remaining samples are a mix of fossil, pre-modern, and modern groundwater. Most of these though consist dominantly of pre-modern to fossil groundwater.

Like the water level data, the groundwater geochemical data display some interesting relationships with respect to surface water. Specifically, GWMA's sampling has shown that a number of wells pumping exclusively fossil groundwater are located in close proximity to surface water sources. As such, this

suggests that these surface waters are not supplying significant (if any) recharge to immediately underlying groundwater systems.

Potential Future Water Sources

The purpose of this section is to outline some potential future scenarios for: (1) continued development of the deep Grande Ronde Basalt aquifer system, (2) development of a suprabasalt aquifer and/or shallow basalt groundwater source, (3) use of surface water, and (4) water reuse. These basic scenarios were selected because in GWMA's judgment that they represent the most likely option(s) available to the majority of those communities inside GWMA that are currently experiencing groundwater supply declines.

Deep Grande Ronde Basalt Groundwater Source

Assuming water rights are available, all GWMA municipalities have the potential to drill wells deeper, predominantly into the Grande Ronde Basalt. Generally, such wells are designed to target potential production rates in excess of 1000 to 2000 gpm and, as such, have (1) a nominal production interval diameter of 12 inches to 16 inches and (2) extend at least 200 feet, if not 400 to 600 feet, into the Grande Ronde Basalt formation. The actual depth of any new Grande Ronde well will depend on its location within the GWMA, as the depth to the top of the unit varies greatly across the region. For example:

- In the northern GWMA the depth to the top of the Grande Ronde Basalt ranges from less than 100 feet to more than 400 or even 500 feet. It is not uncommon to find the top of the Grande Ronde Basalt lying near the ground surface in deeper valleys and in uplifted areas.

- In the central GWMA, near Moses Lake and Othello, the top of the unit lies anywhere between 700 and 800 feet deep (at Moses Lake), to 1000 to 1100 feet deep (at Othello).

- Further south, in southern Grant and Franklin Counties, the top of the Grande Ronde could be well over 1200 feet deep, and may be as much as 1600 feet deep.

One of two primary challenges with the long-term use of groundwater from the Grande Ronde Basalt is sustainability. As noted throughout this review report, the majority of municipal wells currently pumping water from the Grande Ronde Basalt (and the overlying Wanapum Basalt) are experiencing continued water level declines and are pumping predominantly (if not completely) fossil groundwater. Continued well deepening to pump even more of this groundwater simply is not sustainable. Within the next several decades the most accessible parts of this system likely will be dewatered to the point that it cannot support pumping demands such as those it currently struggles to supply.

The other primary challenge that cities will potentially encounter if they drill deeper into the Grande Ronde Basalt is natural groundwater quality. As cities drill deeper into the Grande Ronde aquifer system, elevated concentrations of fluoride, iron, manganese, and hydrogen sulfide should be expected. As the concentrations of these constituents reach certain thresholds, treatment systems will need to be installed and/or modified to meet regulatory requirements and/or improve aesthetic quality. The financial feasibility of dealing with these will vary from place-to-place across the GWMA depending on local hydrogeologic conditions, regulation, tolerance of community stakeholders, and the cost to implement mitigation.

Shallow Suprabasalt Sediment and Shallow Basalt Groundwater Source

In many portions of the four-county GWMA, a shallow groundwater system is present that might prove to be an attractive target for future water supply if access can be secured through water rights acquisition, property purchase, and in some cases the installation of needed treatment systems. The latter item is necessary in some areas because of nutrient, bacterial, and/or chemical contamination.

Areas where GWMA has identified potential shallow groundwater systems include the following:

- Saturated suprabasalt sediments in the Quincy, Royal City, and Pasco Basins.
- Recharged shallow basalt systems within the CBP.
- Areas near upper Crab Creek in northern GWMA, and along the eastern fringe of the GWMA.
- Some locations adjacent to the lower Snake River bordering the southeastern GWMA, and middle Columbia River bordering the western GWMA.

In these areas groundwater geochemical data suggest that modern recharge is active and that a pumping scenario could be devised that keeps pace with modern recharge rates, making for a sustainable groundwater pumping scenario. However, there are two potential limitations in using these waters:

- First, it seems likely that portions of the shallow aquifer system are physically incapable of meeting the production targets without a huge investment in a dispersed well field covering many square miles. Such a system would be expensive to build and maintain. Except locally, most shallow wells for which GWMA finds records seem to be capable of pumping at rates of less than 250 gpm, not the 800 gpm (or more) commonly seen from municipal wells completed in the basalt aquifer systems.

- Second, if production targets indeed could be met by shallow aquifer systems, then treatment likely will be needed in many areas because of the increased potential for surface activities to impact shallow portions of the aquifer system. In fact, some municipalities inside GWMA already have faced shallow groundwater treatment issues. In shallow aquifers, contaminants that might require treatment include bacteria, nitrate-N, TCE, and other SOC's. Costs for treating these constituents could be high.

For those municipalities where shallow groundwater systems are being used nearby to meet other water demands, GWMA recommends that an evaluation of these existing wells be undertaken. Based on such an evaluation a municipality will be able to determine if acquisition of existing wells, or construction of new wells into the targeted shallow system would be a feasible alternative for them to meet some or all of their water supply needs. .

Based on GWMA's assessment of well characteristics, natural and human influenced groundwater quality, and aquifer properties, we conclude the following concerning potential future shallow groundwater sources:

- Creston, Davenport, Mattawa, Moses Lake, Othello, Ritzville, and Quincy already use, or are within less than 10 miles of, these types of sources. Access would likely require expansion of current water supply systems, the purchase and construction of wells (with water rights), construction of pipelines, and potentially construction of water treatment facilities.

- George, Ephrata, Royal City, and Warden are located over several productive shallow groundwater systems. However, water quality issues have either limited their use or led to curtailment of their use.

- Almira, Harrington, Mesa, Odessa, Reardan, Soap Lake, Sprague, Wilbur, and Wilson Creek already rely primarily on the use of shallow groundwater sources, which have been found to be of generally good quality. While shallow groundwater has been a reliable to supply to date, these municipalities should pay particular attention to water quality impacts due to development and over pumping in the event that pumping demands increase.

- Connell, Hatton, and Lind do not appear to be located near a shallow aquifer system that could replace the deep groundwater sources they currently use.

Surface Water Source

Several surface water bodies are present in the GWMA region, the Snake River, the Columbia River, the Crab Creek system, and the CBP canal system. Assuming permission to access them could be acquired for the U.S. Bureau of Reclamation and ECOLOGY, these could potentially serve as water sources.

- In the case of the CBP canal system it would likely only serve as a municipal supply source during times when irrigation demands are not at their peak, such as at the beginning and end of the irrigation season. In such situations, the canals might be a source of water for storage, possibly for aquifer storage and recovery (ASR) activities. Canal water also would likely require treatment to achieve potable water standards.

- The two major rivers in the region, the Columbia and Snake, may be available seasonally as a source of water. However, these likely could only be accessible to municipalities located relatively close to them and/or large enough to afford conveyance and treatment. If these were only accessible seasonally, they also could serve as potential sources of water for ASR.

- With respect to the Crab Creek system, this source of water likely would require significant treatment prior to use. In addition, its relatively small discharge likely would limit its use except for possibly in and around the Moses Lake area (where the lake could serve as a reservoir within the stream system).

Based on GWMA's assessment of surface water characteristics and municipal needs, we conclude the following concerning potential future surface water sources:

- Potential natural water sources might be available to Mattawa (Columbia River), Moses Lake (Crab Creek/Moses Lake system), Odessa (Crab Creek), Quincy (Columbia River), Sprague (Sprague Lake), Washtucna (Palouse River), and Wilson Creek (Crab Creek) if the future need is high enough; the cost of access, conveyance, and treatment is economical; and the water body can actually meet the demand being sought.

- Artificial sources from the CBP system could serve a number of municipalities that are located on or near major canals, including Connell, George, Ephrata, Lind, Mattawa, Mesa, Moses Lake, Othello, Quincy, Royal City, Soap Lake, and Warden.

- Surface water sources are not readily accessible to Almira, Creston, Davenport, Harrington, Hatton, Kahlotus, Reardan, Ritzville, and Wilbur without many miles of pipeline construction.

Water Reuse

Water reuse – which is the utilization of treated waste water for irrigation or similar needs to reduce demand on potable aquifer sources – also is a possible future source of water for many municipalities inside GWMA. Given the size of a given city and the presence of industrial (food processing) waste water sources, a system might be economically viable at some point in that city's future, especially if groundwater sources continue to decline. The largest municipalities where water reuse might be economically feasible now and/or in the future are Connell, Moses Lake, Othello, Quincy, and Warden.

Summary

An evaluation of pumping system and predicted future demands, well records, water level data, groundwater geochemistry data, and groundwater model outputs – ***the risk factors this evaluation focused on*** – reveals that: (1) over half of the 124 municipal water supply wells in the Columbia Basin Ground Water Management Area (GWMA) are predominantly pumping fossil groundwater; (2) natural groundwater recharge occurs only in localized areas and at low rates, resulting in a time frame on the order of thousands of years for this limited recharge water to arrive at a municipal water supply well; (3) water levels are declining and will continue to decline into the foreseeable future if something similar to current pumping trends are maintained; and (4) 13 of the 25 municipalities have future demands that likely exceed currently available pumping potential (Table 7). These basic trends are seen in municipal water supply wells near both natural and artificial surface water sources. In fact, some of the oldest groundwater, lack of evidence of modern recharge, and high water level decline rates are found in wells located within the Columbia Basin Irrigation Project.

Of the 124 municipal supply wells evaluated, the portions of the aquifer system being pumped by these wells are as follows:

- Six from the suprabasalt sediments.
- None are pumping from the Saddle Mountains Basalt.
- 11 from the upper Wanapum Basalt (Priest Rapids/Roza)
- 15 from the lower Wanapum Basalt.
- 18 from the Sentinel Bluffs Member of the Grande Ronde Basalt.
- 20 from the entire Wanapum Basalt,
- 36 from a combination of the Wanapum Basalt and the Grande Ronde Basalt.

Inside GWMA, historic average static water level decline rates in municipal wells are approximately 2.6 feet/year, with the median decline rate at approximately 1.4 feet/year. Groundwater modeling analyses conducted by GWMA modeling predict that average water level decline rates in these will range between 1.7 and 8.2 feet per year over the next 20 to 30 years. These model predictions suggest that a number of municipal wells inside the 4-county GWMA area will see dynamic pumping levels approach or exceeding 800 feet below ground surface in the next 20 years. Such drawdowns will make operation of these wells expensive and problematic.

Declines in groundwater levels and accompanying production rates from municipal supply wells are interpreted to be directly tied to two important factors: (1) the general lack of significant, modern recharge to the portions of the aquifer system being pumped and/or (2) where modern recharge is present, pumping rates exceeding recharge rates. The average C-14 age of the water sampled from these wells is 9,168 years, with a median age of 7,020 years and a maximum age in excess of 26,000 years. Geochemical and isotopic data (including percent modern carbon, tritium, and cation-anion data) show that wells pumping these older waters are not seeing modern recharge. Of the 70 municipal wells from which geochemical samples have been analyzed: (1) 24 have no evidence of modern recharge, (2) 16 have evidence of modern recharge, but are dominated by fossil groundwater, (3) 24 are dominated by modern water, but have a significant fossil component, and (4) only 6 are exclusively modern in origin. Of this full set of wells, only 8 show unchanged or increased historical water levels, the remainder are experiencing declining water level regardless of potential recharge age.

Municipal and non-municipal wells inside GWMA show a combination of (1) water level declines, (2) geochemical parameters indicative of fossil-aged water, and (3) no evidence in many areas of modern recharge. These data, taken together, provide a strong indication that pumping is exceeding the rates of natural and artificial recharge and that, subsequently, groundwater mining is occurring. As this continues, municipalities inside GWMA will face increases in pumping costs. Also, in many cases water treatment costs will rise as municipalities pump older and older water as time goes on, with the increased age of the water correlating with increased fluoride, iron, manganese, sulfide, and temperature. For those few municipalities that are currently pumping younger and generally rechargeable groundwater, the outlook is generally positive as long as pumping demand continues to be less than recharge rates. However, for most of the municipalities inside GWMA (who are facing declining water levels and increased production of old and highly mineralized groundwater), several possible solutions exist, both in the long and short terms. Well deepening is a short term solution; however, continued pumping of fossil water seeing little or no recharge is not sustainable. Consequently, well deepening might buy a municipality time needed to find (and gain access to) other sources, but is not viable in the long run because it is essentially mining deep, non-rechargeable groundwater that also requires increasing treatment needs as wells penetrate further into older, deeper basalt flows.

Based on GWMA's assessment to-date, there are primarily three longer term solutions to replacing the current groundwater mining scenarios with those which are sustainable. These potential solutions are (1) the use of rechargeable alluvial or shallow basalt groundwater, (2) utilization of natural and/or artificial surface water supplies, and/or (3) reuse of treated waste water. While this review does not look at the permits, regulations, and related authorizations needed to access these alternative sources (and these are many and in need of resolution) it does look at the physical potential accessibility of these alternative sources. Most municipalities inside GWMA potentially have access to one or more of these sources. Potentially, the biggest physical challenge with these sources will be the need to purchase the water for future use and construct the infrastructure needed to divert, deliver, treat, and, if necessary, store this water.

- When considering shallow, rechargeable groundwater supplies, municipalities will need to find existing wells that provide evidence that such supplies exist, what their recharge conditions look like, and what the sustainable pumping rates may be. If these can be found to meet potential future supply needs, GWMA recommends that municipalities explore the acquisition of these wells and associated water rights, and convert these water rights to municipal use. With these sources though, a municipality considering their use should pay particular attention to potential

contamination sources tied to surface activity. A highly productive, but contaminated, shallow aquifer would require treatment before it can be devoted to potable use.

- Artificially managed surface water in the form of the Columbia Basin Project (CBP) is found throughout much of the region. While this system is only operated seasonally it may have the potential to supply: (1) untreated water to a municipality for irrigation water supply (for lawns, gardens, and sports fields) and direct industrial uses, etc., (2) potable water during peak demand periods (though this would require treatment [primarily disinfection]), and/or (3) aquifer storage and recovery operations to replace depleted groundwater supplies and/or improve naturally poor groundwater quality via mixing. In all of these cases, the use of canal-delivered water either replaces a depleted source or reduces the use of potable well water for activities that do not necessarily require potable groundwater.

Concurrent with this study, GWMA has been asked in the past about the potential benefits that might accrue to groundwater levels and groundwater supply if agricultural groundwater pumping were to be reduced in the U.S. Bureau of Reclamation's Odessa Special Study Area as is described in a recently completed Environmental Impact Statement (EIS). In some areas decline rates will be reduced as this pumping account for over 90% of local area groundwater pumping. However, in many areas of GWMA this likely will have a minimal influence on groundwater decline conditions because of the following factors and observations:

- An approximately 200,000 acre-foot annual reduction in annual groundwater pumping may account for no more than ¼ to 1/3 of the total groundwater pumping. In the absence of recharge, declines will continue in most areas because groundwater pumping for irrigation will continue.

- Compartmentalization of the aquifer system – both laterally due to folds, faults, and dikes, and vertically (because the aquifer system is stratigraphically layered) – will limit the influence of reduced groundwater withdrawals. Water level declines will be most influenced by reduced groundwater pumping in those areas of the GWMA having a high degree of hydrologic connectivity with adjoining areas where pumping is reduced.

- Many GWMA municipalities located within the Columbia Basin Project, in close proximity to extensive surface irrigation, are in areas where little or no reduction in groundwater pumping will occur because it is not already going on. It has been found that many of these municipalities already are pumping fossil groundwater and see declining water levels. As there are few or no irrigation wells in these areas, it is difficult to see how reduced groundwater pumping related to taking wells offline will influence groundwater supply for these wells.

Where pumping and water level information was available GWMA found the following with respect to the ***risk factors*** we defined. Thirty-three of 76 wells with pumping tests have drawdowns over 100 feet, suggesting either well or aquifer limitations on water production. Thirty-three of 84 wells have historical and/or model predicted water level decline rates exceeding 2 feet/year, indicating aquifer storage depletion is occurring. Fourteen of 57 wells with water level and pumping test data suggest predicted future drawdowns that will meet or exceed 700 feet below ground surface in the next several decades. Based on groundwater geochemical data collected from 75 wells, 1/3 are pumping fossil groundwater, ¼ are pumping predominantly modern groundwater, and the rest are pumping mixed, but fossil dominated groundwater. Taking all of these factors together GWMA finds that of 97 wells with data for

one or more of the risk factors, 18 of them display one factor, and 35 of them display two or more. Coupling these risks with predicted future water demands, we find that at least half of the municipalities in GWMA will likely not meet their water production targets by approximately 2030.

TABLES

Current Well Capacity
Future Predicted Water Demands in 2030 and 2060
Well Construction
Well Hydrology
Static Water Level
Groundwater Geochemistry
Depths of Static and Dynamic Water Levels
Observations for Municipal Wells

Table 1
Summary of Current Well Capacity and Future Predicted Water Demands in 2030 and 2060

Municipality	Current reported primary well capacity (gpm)	Approx. predicted peak water demand in 2030 (gpm)	Approx. predicted peak water demand in 2060 (gpm)	Reported recent supply capacity shortfall
Almira	800	109	116	
Connell	4,550	**4,700**	**5,600**	
Creston	705	180	200	
Davenport	2,650	850	990	
Ephrata	7,000	**6,500**	**11,800**	
George	1490	590	800	
Harrington	755	440	500	
Hatton	350	81	89	
Kahlotus	350	**390**	**440**	
Lind	**1,720**	405	460	High drawdown in 2012 limiting current pumping capacity
Mattawa	2,090	1,800	**2,900**	
Mesa	450	**440**	**500**	
Moses Lake	22,400	**21,500**	**48,700**	
Odessa	1,550	670	780	
Othello	5,050	**7,900**	**13,700**	
Quincy	8,400	**8,500**	**12,500**	
Reardan	575	360	420	
Ritzville	**1,950**	900	900	High drawdown in 2012 limiting current pumping capacity
Royal City	1,950	1,490	**4,300**	
Soap Lake	1,850	780	1,200	
Sprague	850	600	680	
Warden	3,350	2,600	**4,200**	
Washtucna	380	**380**	**430**	
Wilbur	1,490	800	950	
Wilson Creek	1,250	270	320	

Note:
Municipalities with potential shortfalls in existing capacity and future needs are highlighted in bold lettering.

Table 2
Well Construction Summary

well name	GWMA ID	ERO#	year drilled	date use ended	total depth (ft)	casing depth (ft)	seal depth (ft)
NORTHERN BASIN							
Almira #1			1945	1992	200	30	30
Almira #2	L2036		1958		150	50	50
Almira #3	L0517		1962				
Almira #4	L2034		1991		377	232	232
Creston #1	L2117		1923		288		
Creston #2	L0567		1981		766	8	
Davenport #1	L0458	444	1961	1995			
Davenport #2	L0462	443	1962	1995	495	60	
Davenport #3	L0461		1948	1993	722	16	
Davenport #4	L0454	456	1960	1990	302		
Davenport #5	L1920		1962	1990	501	60	
Davenport #6	L0465	460	1975		975	445	445
Davenport #7	L0463		1995		959	447	447
Harrington #1			1916		300		
Harrington #2			1955	1994			
Harrington #3	L1681		1994		200	120	120
Reardan #2			1948	1994			
Reardan #5				1994			
Reardan #6	L0485		1957		300	38	
Reardan #7				2004			
Reardan #8	L0495		1991		452	268	268
Ritzville #1	A2756	496	1929		391	100	
Ritzville #3			1940	2003	460	48	
Ritzville #5			1955		622		
Ritzville #6	A0563		1952		603		
Ritzville #7	A0559		1959		789	34	
Ritzville #8	A0560	182	1994		979	64	64
Sprague #1			1930	1990	25		
Sprague #2							
Sprague #3	L0216		1980		502	218	218
Sprague #4			1976		500	17	17
Wilbur #2			1967		502	17	
Wilbur #3	L0547		1962		294	294	
Wilbur #4	L2075		1976		375	70	70
Wilson Creek #1	GR9524		1908		285		
Wilson Creek #2	GR1152		1978		193	67	67
Wilson Creek #3	GR1152		1987		202	176	90

Table 2
Well Construction Summary

well name	GWMA ID	ERO#	year drilled	date use ended	total depth (ft)	casing depth (ft)	seal depth (ft)
CENTRAL BASIN							
Connell #1			1920				
Connell #2		337	1939				
Connell #3	F4297		1954		502	502	
Connell #4	F0479		1959		1105	55	129
Connell #5	F0480		1967		990	420	101
Connell #6	F0492		1972		1000	160	160
Connell #8	F0380		1978		1325	800	70
Connell #9	F4121		1997		527	60	
Connell #10			1994		1295	597	597
Hatton #1	A0337		1975				
Hatton #2	A0016		1979		700	172	172
Kahlotus #1			1928				
Kahlotus #2	F4147		1961	1970	350	39	
Kahlotus #3	G0916		1982		680	680	602
Lind #1	A2483		1903		286	110	
Lind #2							
Lind #3	A0136		1948	1975	382	75	
Lind #4	A0149		1948	1975	204	55	
Lind #6	A0148		1971		747	32	
Lind #7	A0135		1980		1020	537	515
Lind #8	A1480		2000		2034	720	720
Mesa #1	F4098		1953		100	100	
Mesa #2	F4104		2006		163	162	18
Moses Lake #3	GR6094		1951		909	132	
Moses Lake #4	GR0837		1954		1000	711	
Moses Lake #7	GR0617		1957		950	680	680
Moses Lake #8	GR6186		1960		1049	310	
Moses Lake #9	GR6140		1964		1100	713	713
Moses Lake #10	GR6141		1970		692	269	236
Moses Lake #12	GR1379		1945		568		
Moses Lake #14	GR6087	778	1990		1025	735	735
Moses Lake #17	GR1692	779	1994		1240	686	686
Moses Lake #18	GR1946		2003		585	280	280
Moses Lake #19	GR6175		2008		755	365	365
Moses Lake #21	GR1802		1943		712	420	420
Moses Lake #23	GR6092		1954		791	218	
Moses Lake #24	GR1938		1981		730	452	410
Moses Lake #28	GR0635		1961		750	258	258

Table 2
Well Construction Summary

well name	GWMA ID	ERO#	year drilled	date use ended	total depth (ft)	casing depth (ft)	seal depth (ft)
Moses Lake #29	GR8244		1955		134	84	
Moses Lake #31	GR6174		2008		970	843	750
Moses Lake #33	GR6183		2009		800	681	681
Odessa #1							
Odessa #2							
Odessa #3	L1455	269	1966		595	250	250
Odessa #4	L0053				660	160	160
Othello #2	A0250	484	1940		697	120	
Othello #3	A1466	487	1957		900	197	
Othello #4	A1579	483	1965		976	976	
Othello #5	A0004		1973		1007	550	272
Othello #6	A1581	485	1978		1005	212	212
Othello #7	A1582		1998		820	670	200
Othello #8	A1532		2002		853	398	398
Warden #4	GR4448		1957	2010	319	80	
Warden #5	G1616		1968		368	54	
Warden #6	GR3215	780	1979		830	439	386
Warden #7	GR1922		2006		857	770	770
Washtucna #2	A2076		1918		472	0	
Washtucna #3	A2071		1992		536	482	482
NORTHWEST BASIN							
Ephrata #1			1933	1988			
Ephrata #2	GR9081		1941		265	198	
Ephrata #3	GR8719		1952		1000	140	
Ephrata #4	G0802		1952		618	275	
Ephrata #5	GR1066		1953		450	225	225
Ephrata #6	GR1074		1963		1025	691	40
Ephrata #7			1964	1965			
Ephrata #8			1964	1965			
Ephrata #9	GR1076		1964		1361	624	
Ephrata #10	GR8717		1977		1850	900	20
George #1	GR4546		1957		188	34	
George #2	GR0281		1959		177	33	
George #3			2011		416	310	310
Quincy #1	GR7650		1937		431	80	80
Quincy #2			1937				
Quincy #3	GR0553		1970		406	64	59
Quincy #4	GR0556		1981		392	244	244
Quincy #5	GR7651		1983		381	250	250

Table 2
Well Construction Summary

well name	GWMA ID	ERO#	year drilled	date use ended	total depth (ft)	casing depth (ft)	seal depth (ft)
Soap Lake #1	GR9309		1975		466	466	
Soap Lake #2				1999			
Soap Lake #3	GR9226		1952		901	505	505
SOUTHWEST BASIN							
Mattawa #1	GR3507		1956	2011	764	312	
Mattawa #2	GR3508		1981		993	526	23
Mattawa #3	GR3509		1993		1135	780	567
Mattawa #4			2012		1116	795	795
Royal City #1	G1461		1956		907	43	43
Royal City #2	GR1644		1964	2011			
Royal City #3	GR1924		2005		1120	734	734
Royal City #4			2011		1051	798	798
GWMA-WIDE STATISTICS							
average			1967		675	316	326
median			1964		670	238	250
minimum			1903		25	0	17
maximum			2012		2034	976	798

Table 3
Well Hydrogeology Summary
Wells highlighted in gray are decommissioned or currently not operational.
Wells highlighted in bold type have reported drawdowns exceeding 100 feet.

well name	GWMA ID	Sed	SMB	Tpr, Tr	Tf	Tgsb	deeper GRB	test pumping rate (gpm)	DD (ft)	specific cap (gpm/ft-DD)
NORTHWEST BASIN										
Almira #1				x		x		200	7	28.6
Almira #2	L2036			x		x		390	62	6.3
Almira #3	L0517							100	26	3.8
Almira #4	L2034					x				
Creston #1	L2117			x						
Creston #2	L0567			x		x				
Davenport #1	L0458							355	36	9.9
Davenport #2	**L0462**			**x**				**750**	**204**	**3.7**
Davenport #3	L0461			x		x				
Davenport #4	L0454			x				235	50	4.7
Davenport #5	L1920			x		x				
Davenport #6	L0465					x		2200	30	73.3
Davenport #7	**L0463**					**x**		**1050**	**355**	**3.0**
Harrington #1				x						
Harrington #2				x						
Harrington #3	L1681			x				800	35	22.9
Reardan #2				x				55	70	0.8
Reardan #5										
Reardan #6	L0485			x				250	60	4.2
Reardan #7										
Reardan #8	**L0495**			**x**		**x**		**690**	**232**	**3.0**
Ritzville #1	A2756				x					
Ritzville #3				**x**	**x**			**300**	**220**	**1.4**
Ritzville #5										
Ritzville #6	A0563			x	x					
Ritzville #7	**A0559**				**x**	**x**		**430**	**550**	**0.8**
Ritzville #8	A0560					x				
Sprague #1		x								
Sprague #2										
Sprague #3	L0216				x	x				
Sprague #4				x	x	x				
Wilbur #2				**x**		**x**		**500**	**295**	**1.7**
Wilbur #3	L0547			x		x		60	6	10.0
Wilbur #4	**L2075**			**x**		**x**		**1000**	**113**	**8.8**
Wilson Creek #1	GR9524					x		265	10	26.5
Wilson Creek #2	GR1152					x		900	96	9.4

Table 3
Well Hydrogeology Summary
Wells highlighted in gray are decommissioned or currently not operational.
Wells highlighted in bold type have reported drawdowns exceeding 100 feet.

well name	GWMA ID	Sed	SMB	Tpr, Tr	Tf	Tgsb	deeper GRB	test pumping rate (gpm)	DD (ft)	specific cap (gpm/ft-DD)
Wilson Creek #3	GR1152					x		1100	14	78.6
CENTRAL BASIN										
Connell #1										
Connell #2										
Connell #3	**F4297**			**x**	**x**			**350**	**176**	**2.0**
Connell #4	**F0479**			**x**	**x**	**x**		**737**	**143**	**5.2**
Connell #5	**F0480**			**x**	**x**			**825**	**170**	**4.9**
Connell #6	F0492			x	x	x		800	50	16.0
Connell #8	F0380				x	x		2409	62	38.9
Connell #9	F4121				x					
Connell #10					x	x				
Hatton #1	A0337			x	x					
Hatton #2	A0016				x	x				
Kahlotus #1										
Kahlotus #2	**F4147**				**x**			**300**	**140**	**2.1**
Kahlotus #3	G0916					x				
Lind #1	A2483									
Lind #2										
Lind #3	A0136							442	40	11.1
Lind #4	A0149				x	x				
Lind #6	A0148				x	x				
Lind #7	A0135					x	x	1000	85	11.8
Lind #8	A1480					x	x	1200	31	38.7
Mesa #1	F4098	x						1000	76	13.2
Mesa #2	F4104	x								
Moses Lake #3	GR6094			x	x	x		1420	92	15.4
Moses Lake #4	GR0837					x		1510	65	23.2
Moses Lake #7	**GR0617**					**x**		**2000**	**150**	**13.3**
Moses Lake #8	**GR6186**				**x**	**x**		**1970**	**146**	**13.5**
Moses Lake #9	**GR6140**				**x**	**x**		**1500**	**145**	**10.3**
Moses Lake #10	**GR6141**				**x**			**2200**	**147**	**15.0**
Moses Lake #12	**GR1379**				**x**					
Moses Lake #14	**GR6087**				**x**	**x**		**1600**	**218**	**7.3**
Moses Lake #17	**GR1692**				**x**	**x**		**3000**	**120**	**25.0**
Moses Lake #18	**GR1946**				**x**			**2200**	**150**	**14.7**
Moses Lake #19	GR6175				x			1100	60	18.3
Moses Lake #21	GR1802				x			1300	60	21.7

Table 3
Well Hydrogeology Summary
Wells highlighted in gray are decommissioned or currently not operational.
Wells highlighted in bold type have reported drawdowns exceeding 100 feet.

well name	GWMA ID	Sed	SMB	Tpr, Tr	Tf	Tgsb	deeper GRB	test pumping rate (gpm)	DD (ft)	specific cap (gpm/ft-DD)
Moses Lake #23	GR6092				x			1000	30	33.3
Moses Lake #24	GR1938				x			3000	19	157.9
Moses Lake #28	GR0635				x					
Moses Lake #29	GR8244	x								
Moses Lake #31	**GR6174**					**x**		**1500**	**169**	**8.9**
Moses Lake #33	**GR6183**					**x**		**1290**	**145**	**8.9**
Odessa #1										
Odessa #2										
Odessa #3	L1455			x		x		1200	25	48.0
Odessa #4	L0053					x		1400	19	73.7
Othello #2	A0250			x	x					
Othello #3	A1466			x	x			1340	36	37.2
Othello #4	A1579				x			1000	25	40.0
Othello #5	**A0004**				**x**			**1575**	**145**	**10.9**
Othello #6	**A1581**			**x**	**x**			**2200**	**110**	**20.0**
Othello #7	**A1582**				**x**			**1200**	**290**	**4.1**
Othello #8	**A1532**			**x**	**x**			**923**	**220**	
Warden #4	**GR4448**			**x**	**x**			**1100**	**166**	**6.6**
Warden #5	**G1616**			**x**	**x**			**1400**	**163**	**8.6**
Warden #6	GR3215				x	x		3180	86	37.0
Warden #7	GR1922					x		2100	61	34.4
Washtucna #2	A2076				x	x		225	1	225
Washtucna #3	A2071					x				
NORTHWEST BASIN										
Ephrata #1										
Ephrata #2	GR9081			x	x			1600	26	61.5
Ephrata #3	**GR8719**	**x**		**x**	**x**	**x**		**752**	**157**	**4.8**
Ephrata #4	G0802	x		x	x	x		1190	29	41.0
Ephrata #5	**GR1066**			**x**	**x**			**636**	**100**	**6.4**
Ephrata #6	**GR1074**	**x**		**x**	**x**	**x**		**720**	**132**	**5.5**
Ephrata #7		x								
Ephrata #8		x								
Ephrata #9	**GR1076**	**x**		**x**	**x**	**x**		**1400**	**208**	**6.7**
Ephrata #10	**GR8717**	**x**		**x**	**x**	**x**	**x**	**2800**	**105**	**26.7**
George #1	GR4546			x				1000	80	12.5
George #2	GR0281			x				1000	40	25.0
George #3					x					

Table 3
Well Hydrogeology Summary
Wells highlighted in gray are decommissioned or currently not operational.
Wells highlighted in bold type have reported drawdowns exceeding 100 feet.

well name	GWMA ID	Sed	SMB	Tpr, Tr	Tf	Tgsb	deeper GRB	test pumping rate (gpm)	DD (ft)	specific cap (gpm/ft-DD)
Quincy #1	GR7650			x	x			100	3	33.3
Quincy #2				x	x					
Quincy #3	**GR0553**			**x**	**x**			**1630**	**164**	**9.9**
Quincy #4	**GR0556**			**x**	**x**			**2500**	**197**	**12.7**
Quincy #5	GR7651			x	x			3900	38	102.6
Soap Lake #1	GR9309					x	x	400	25	16.0
Soap Lake #2										
Soap Lake #3	GR9226					x	x	1000	57	17.5
SOUTHWEST BASIN										
Mattawa #1	GR3507			x				500	80	6.3
Mattawa #2	GR3508				x					
Mattawa #3	GR3509			x	x					
Mattawa #4								1100	25	44.0
Royal City #1	G1461				x					
Royal City #2	GR1644			x	x					
Royal City #3	GR1924				x			750	98	7.7
Royal City #4					x					
GWMA-WIDE STATISTICS										
average								1178	106	24.5
median								1000	80	12.9
minimum								55	1	0.8
maximum								3900	550	225.0

Sed – sediment; **Tpr**- Priest Rapids Member, Wanapum Basalt; **Tr** – Roza Member, Wanapum Basalt; **Tf** – Frenchman Springs Member, Wanapum Basalt; **Tgsb** – Sentinel Bluffs Member, Grande Ronde Basalt; **GRB** – Grande Ronde Basalt; **DD** – drawdown; **gpm** – gallons per minute; **ft** - feet.

Table 4

Summary of Static Water Level Data, Including Observed and Predicted Annual Rates of Change

Wells highlighted in gray shading are decommissioned or currently not operational.

Wells with observed or model predicted water level decline rates over 2 feet/year are highlighted in bold type.

well name	GWMA ID	initial DTW (ft)	year	most recent DTW (ft)	year	obs av static change (ft/yr)	predicted future static change (ft/year)	canal within 2 miles	natural surface water within 2 miles
NORTHERN BASIN									
Almira #1		4	1945					n	n
Almira #2	L2036	0	1976	55	2012	-1.5		n	n
Almira #3	**L0517**	**0**	**1962**	**74**	**1990**	**-2.6**	**-0.5**	**n**	**n**
Almira #4	L2034	169	1991				-1.4	n	n
Creston #1	L2117	130	1923	134	2012	0.0		n	y
Creston #2	**L0567**	**116**	**1981**	**189**	**2012**	**-2.4**	**-0.9**	**n**	**y**
Davenport #1	L0458	82	1961	137	2012	-1.1		n	y
Davenport #2	**L0462**	**89**	**1962**	**189**	**2012**	**-2.0**		**n**	**y**
Davenport #3	L0461							n	y
Davenport #4	L0454							n	y
Davenport #5	L1920							n	y
Davenport #6	**L0465**	**220**	**1975**	**245**	**2012**	**-0.7**	**-5.8**	**n**	**y**
Davenport #7	L0463	265	1995	353	2012	-5.2		n	y
Harrington #1								n	y
Harrington #2								n	y
Harrington #3	L1681	13	1994	22	2012	-0.5	-0.9	n	y
Reardan #2		20	1948					n	y
Reardan #5								n	y
Reardan #6	L0485	60	1957				-0.4	n	y
Reardan #7								n	y
Reardan #8	L0495	138	1991	140	2010	-0.1		n	y
Ritzville #1	A2756	120	1929				-0.7	n	n
Ritzville #3		125	1940					n	n
Ritzville #5								n	n
Ritzville #6	A0563						-0.5	n	n
Ritzville #7	A0559	189	1959				-0.6	n	n
Ritzville #8	**A0560**	**631**	**1994**	**670**	**2010**	**-2.4**	**-0.72**	**n**	**n**
Sprague #1		2	1990					n	y
Sprague #2								n	y
Sprague #3	L0216	138	1980	148	2012	-0.3	-0.85	n	y
Sprague #4		71	1976	74	2012	-0.1		n	y
Wilbur #2		135	1967					n	y
Wilbur #3	L0547	175	1962	189	2012	-0.3	-0.7	n	y
Wilbur #4	L2075	0	1976	15	2012	-0.4	-1.44	n	y

Table 4

Summary of Static Water Level Data, Including Observed and Predicted Annual Rates of Change

Wells highlighted in gray shading are decommissioned or currently not operational.

Wells with observed or model predicted water level decline rates over 2 feet/year are highlighted in bold type.

well name	GWMA ID	initial DTW (ft)	year	most recent DTW (ft)	year	obs av static change (ft/yr)	predicted future static change (ft/year)	canal within 2 miles	natural surface water within 2 miles
Wilson Creek #1	GR9524	50						n	y
Wilson Creek #2	GR1152	52	1978				-0.33	n	y
Wilson Creek #3	**GR1152**	**61**	**1987**				**-3.38**	**n**	**y**
CENTRAL BASIN									
Connell #1								y	n
Connell #2		258	1939					y	n
Connell #3	F4297	244	1959	218	1998	0.7	-0.7	y	n
Connell #4	**F0479**	**244**	**1959**	**417**	**1998**	**-4.4**	**-1.3**	**y**	**n**
Connell #5	**F0480**	**340**	**1969**	**406**	**1998**	**-2.3**	**-1.5**	**y**	**n**
Connell #6	**F0492**	**237**	**1972**	**379**	**2009**	**-3.8**		**y**	**n**
Connell #8	**F0380**	**330**	**1978**	**505**	**2009**	**-5.6**	**-6.0**	**y**	**n**
Connell #9	F4121	413	1997	422	2005	-1.1		y	n
Connell #10		667	1994	669	2005	-0.2		y	n
Hatton #1	**A0337**	**350**	**1975**	**545**	**2006**	**-6.3**	**-1.3**	**n**	**n**
Hatton #2	A0016	373	1979				-1.5	n	n
Kahlotus #1							-0.4	n	n
Kahlotus #2	F4147	56	1961					n	n
Kahlotus #3	**G0916**	**417**	**1982**				**-3.5**	**n**	**n**
Lind #1	A2483	60	1903					n	n
Lind #2								n	n
Lind #3	A0136	55	1948					n	n
Lind #4	A0149			123	2006			n	n
Lind #6	A0148						-1.0	n	n
Lind #7	**A0135**	**450**	**1980**	**580**	**2012**	**-4.1**	**-2.4**	**n**	**n**
Lind #8	**A1480**	**440**	**2000**	**470**	**2012**	**-2.5**		**n**	**n**
Mesa #1	F4098	35	1953					y	n
Mesa #2	F4104	89	2006					y	n
Moses Lake #3	**GR6094**	**25**	**1951**	**165**	**1991**	**-3.5**		**y**	**y**
Moses Lake #4	**GR0837**	**33**	**1954**	**260**	**2007**	**-4.3**	**-3.4**	**y**	**y**
Moses Lake #7	**GR0617**	**0**	**1957**	**125**	**2007**	**-2.5**		**y**	**y**
Moses Lake #8	GR6186	70	1963	120	1989	-1.9	-1.96	y	y
Moses Lake #9	**GR6140**	**38**	**1964**	**375**	**2009**	**-7.5**		**y**	**y**
Moses Lake #10	**GR6141**	**50**	**1970**	**150**	**2009**	**-2.6**	**-1.81**	**y**	**y**
Moses Lake #12	GR1379	60	1975	72	2009	-0.4		y	y
Moses Lake #14	**GR6087**	**76**	**1990**	**200**	**2009**	**-6.5**		**y**	**y**

Table 4

Summary of Static Water Level Data, Including Observed and Predicted Annual Rates of Change

Wells highlighted in gray shading are decommissioned or currently not operational.

Wells with observed or model predicted water level decline rates over 2 feet/year are highlighted in bold type.

well name	GWMA ID	initial DTW (ft)	year	most recent DTW (ft)	year	obs av static change (ft/yr)	predicted future static change (ft/year)	canal within 2 miles	natural surface water within 2 miles
Moses Lake #17	**GR1692**	**185**	**1994**	**350**	**2009**	**-11.0**	**-2.65**	**y**	**y**
Moses Lake #18	**GR1946**	**51**	**2002**				**-2.79**	**y**	**y**
Moses Lake #19	GR6175						-1.79	y	y
Moses Lake #21	**GR1802**	**136**	**1943**	**280**	**2009**	**-2.2**	**-1.65**	**y**	**y**
Moses Lake #23	GR6092	102	1954	180	2009	-1.4		y	y
Moses Lake #24	**GR1938**	**161**	**1981**	**180**	**2009**	**-0.7**	**-2.19**	**y**	**y**
Moses Lake #28	GR0635			150	2009		-1.79	y	y
Moses Lake #29	GR8244						-1.42	y	y
Moses Lake #31	**GR6174**						**-8.17**	**y**	**y**
Moses Lake #33	**GR6183**						**-3.63**	**y**	**y**
Odessa #1		200						n	y
Odessa #2		300						n	y
Odessa #3	**L1455**	**245**	**1966**	**470**	**2010**	**-5.1**		**n**	**y**
Odessa #4	L0053	119	1977	149	2010	-0.9	-0.9	n	y
Othello #2	A0250						-1.2	y	n
Othello #3	A1466	278	1957				-1.5	y	n
Othello #4	A1579	225	1965					y	n
Othello #5	A0004	283	1973				-1.1	y	n
Othello #6	**A1581**	**197**	**1978**	**420**	**2010**	**-7.0**		**y**	**n**
Othello #7	A1582	125	1998					y	n
Othello #8	A1532	380	2002				-1.6	y	n
Warden #4	GR4448	62	1957					y	n
Warden #5	G1616	42	1968	30	2012	0.3	-1.92	y	n
Warden #6	GR3215	174	1979	112	2012	1.9		y	n
Warden #7	**GR1922**	**273**	**2006**	**340**	**2010**	**-16.8**		**y**	**n**
Washtucna #2	A2076	73	1948				-0.1	n	n
Washtucna #3	**A2071**	**235**	**1992**				**-3.9**	**n**	**n**
NORTHWEST BASIN									
Ephrata #1								y	n
Ephrata #2	GR9081	17	1941					y	n
Ephrata #3	**GR8719**	**135**	**1952**	**288**	**2004**	**-2.9**		**y**	**n**
Ephrata #4	G0802	184	1952	238	2004	-1.0		y	n
Ephrata #5	**GR1066**	**56**	**1953**	**260**	**2004**	**-4.0**		**y**	**n**
Ephrata #6	GR1074	200	1967	148	2004	1.4		y	n
Ephrata #7								y	n

Table 4

Summary of Static Water Level Data, Including Observed and Predicted Annual Rates of Change

Wells highlighted in gray shading are decommissioned or currently not operational.

Wells with observed or model predicted water level decline rates over 2 feet/year are highlighted in bold type.

well name	GWMA ID	initial DTW (ft)	year	most recent DTW (ft)	year	obs av static change (ft/yr)	predicted future static change (ft/year)	canal within 2 miles	natural surface water within 2 miles
Ephrata #8								y	n
Ephrata #9	GR1076	24	1964	81	2004	-1.4		y	n
Ephrata #10	**GR8717**	**215**	**1977**	**229**	**2004**	**-0.5**	**-5.9**	**y**	**n**
George #1	GR4546	40	1957	27	2012	0.2	-0.5	y	n
George #2	GR0281	30	1959	27	2012	0.1	-0.5	y	n
George #3		321	2011					y	n
Quincy #1	GR7650	275	1937					y	n
Quincy #2								y	n
Quincy #3	GR0553	24	1970				0.1	y	n
Quincy #4	GR0556	17	1981				-0.6	y	n
Quincy #5	GR7651	0	1983				0.0	y	n
Soap Lake #1	GR9309	0	1975				-0.87	y	y
Soap Lake #2								y	y
Soap Lake #3	GR9226	57	1952					y	y
SOUTHWEST BASIN									
Mattawa #1	**GR3507**	**315**	**1956**	**582**	**1985**	**-9.2**		**y**	**y**
Mattawa #2	GR3508						-0.4	y	y
Mattawa #3	GR3509	295	1993				-1.2	y	y
Mattawa #4		290	2010					y	y
Royal City #1	G1461	530	1956	471	2005	1.2	-0.81	y	n
Royal City #2	GR1644	591	1964	567	2005	0.6		y	n
Royal City #3	GR1924	580	2005				-1.3	y	n
Royal City #4								y	n
GWMA-WIDE STATISTICS									
average				241.4		-2.5	-1.7		
median				189.0		-1.9	-1.3		
maximum				15.0		-16.8	-8.2		
minimum				670.0		1.9	0.1		

ID – identification; **DTW** – depth to water; **Obs** – observed; **Av** –average.

Table 5

Potential Depths of Static and Dynamic Water Levels in 2060

Wells highlighted in gray shading are decommissioned or currently not operational.

Wells with predicted static or dynamic water levels greater than 700 feet below ground surface are highlighted in bold type.

well name	GWMA ID	most recent DTW (ft)	year	obs av static change (ft/yr)	predicted future static change (ft/year)	predicted approx. static DTW in 2060	predicted approx. dynamic DTW in 2060
NORTHERN BASIN							
Almira #1		4	1945				
Almira #2	L2036	55	2012	-1.5		152	214
Almira #3	L0517	74	1990	-2.6	-0.5	106 to 256	132 to 288
Almira #4	L2034	169	1991		-1.4	268	
Creston #1	L2117	134	2012	0.0			
Creston #2	L0567	189	2012	-2.4	-0.9		
Davenport #1	L0458	137	2012	-1.1			
Davenport #2	L0462	189	2012	-2.0			
Davenport #3	L0461						
Davenport #4	L0454						
Davenport #5	L1920						
Davenport #6	**L0465**	**245**	**2012**	**-0.7**	**-5.8**	**305 to 710**	**355 to 740**
Davenport #7	L0463	353	2012	-5.2			
Harrington #1							
Harrington #2							
Harrington #3	L1681	22	2012	-0.5	-0.9	75	110
Reardan #2		20	1948				
Reardan #5							
Reardan #6	L0485	60	1957		-0.4	101	161
Reardan #7							
Reardan #8	L0495	140	2010	-0.1			
Ritzville #1	A2756				-0.7		
Ritzville #3		125	1940				
Ritzville #5							
Ritzville #6	A0563				-0.5		
Ritzville #7	A0559				-0.6		
Ritzville #8	**A0560**	**670**	**2010**	**-2.4**	**-0.72**	**706 to 792**	
Sprague #1		2	1990				
Sprague #2							
Sprague #3	L0216	148	2012	-0.3	-0.85	206	
Sprague #4		74	2012	-0.1			
Wilbur #2		135	1967				
Wilbur #3	L0547	189	2012	-0.3	-0.7	244	250
Wilbur #4	L2075	15	2012	-0.4	-1.44		

Table 5

Potential Depths of Static and Dynamic Water Levels in 2060

Wells highlighted in gray shading are decommissioned or currently not operational.

Wells with predicted static or dynamic water levels greater than 700 feet below ground surface are highlighted in bold type.

well name	GWMA ID	most recent DTW (ft)	year	obs av static change (ft/yr)	predicted future static change (ft/year)	predicted approx. static DTW in 2060	predicted approx. dynamic DTW in 2060
Wilson Creek #1	GR9524						
Wilson Creek #2	GR1152	52	1978		-0.33	79	175
Wilson Creek #3	GR1152	61	1987		-3.38	308	322
CENTRAL BASIN							
Connell #1							
Connell #2		258	1939				
Connell #3	F4297	218	1998	0.7	-0.7	258	435
Connell #4	F0479	417	1998	-4.4	-1.3	497 to 690	640 to 833
Connell #5	**F0480**	**406**	**1998**	**-2.3**	**-1.5**	**500 to 549**	**670 to 719**
Connell #6	F0492	379	2009	-3.8		572	623
Connell #8	**F0380**	**505**	**2009**	**-5.6**	**-6.0**	**791 to 808**	**853 to 870**
Connell #9	F4121	422	2005	-1.1		483	
Connell #10		**669**	**2005**	**-0.2**		**688**	
Hatton #1	**A0337**	**545**	**2006**	**-6.3**	**-1.3**	**614 to 869**	
Hatton #2	A0016	373	1979		-1.5	493	
Kahlotus #1					-0.4		
Kahlotus #2	F4147	56	1967				
Kahlotus #3	**G0916**	**417**	**1982**		**-3.5**	**687**	
Lind #1	A2483	60	1903				
Lind #2							
Lind #3	A0136	55	1948				
Lind #4	A0149	123	2006				
Lind #6	A0148				-1.0		
Lind #7	**A0135**	**580**	**2012**	**-4.1**	**-2.4**	**692 to 772**	**778 to 857**
Lind #8	A1480	470	2012	-2.5		590	621
Mesa #1	F4098	35	1953				
Mesa #2	F4104	89	2006				
Moses Lake #3	GR6094	165	1991	-3.5		407	499
Moses Lake #4	GR0837	260	2007	-4.3	-3.4	440 to 448	505 to 553
Moses Lake #7	GR0617	125	2007	-2.5		125	152
Moses Lake #8	GR6186	120	1989	-1.9	-1.96	263	409
Moses Lake #9	**GR6140**	**375**	**2009**	**-7.5**		**758**	**903**
Moses Lake #10	GR6141	150	2009	-2.6	-1.81	202 to 304	349 to 451
Moses Lake #12	GR1379	72	2009	-0.4		463	
Moses Lake #14	GR6087	200	2009	-6.5		532	750

Table 5

Potential Depths of Static and Dynamic Water Levels in 2060

Wells highlighted in gray shading are decommissioned or currently not operational.

Wells with predicted static or dynamic water levels greater than 700 feet below ground surface are highlighted in bold type.

well name	GWMA ID	most recent DTW (ft)	year	obs av static change (ft/yr)	predicted future static change (ft/year)	predicted approx. static DTW in 2060	predicted approx. dynamic DTW in 2060
Moses Lake #17	**GR1692**	**350**	**2009**	**-11.0**	**-2.65**	**485 to 911**	**605 to 1031**
Moses Lake #18	GR1946	51	2002		-2.79	313	463
Moses Lake #19	GR6175				-1.79		
Moses Lake #21	GR1802	280	2009	-2.2	-1.65	365 to 392	424 to 452
Moses Lake #23	GR6092	180	2009	-1.4		251	281
Moses Lake #24	GR1938	180	2009	-0.7	-2.19	216 to 292	235 to 311
Moses Lake #28	GR0635	150	2009		-1.79	241	
Moses Lake #29	GR8244				-1.42		
Moses Lake #31	GR6174				-8.17		
Moses Lake #33	GR6183				-3.63		
Odessa #1							
Odessa #2							
Odessa #3	**L1455**	**470**	**2010**	**-5.1**		**725**	**750**
Odessa #4	L0053	149	2010	-0.9	-0.9	199 to 215	218 to 234
Othello #2	A0250				-1.2		
Othello #3	A1466	278	1957		-1.5		
Othello #4	A1579	225	1965				
Othello #5	A0004	283	1973		-1.1	381	526
Othello #6	A1581	420	2010	-7.0			
Othello #7	**A1582**	**125**	**1998**			**765**	**875**
Othello #8	A1532	380	2002		-1.6	470	615
Warden #4	GR4448	62	1957				
Warden #5	G1616	30	2012	0.3	-1.92	219	382
Warden #6	GR3215	112	2012	1.9			
Warden #7	**GR1922**	**340**	**2010**	**-16.8**		**1090**	**1151**
Washtucna #2	A2076	73	1948		-0.1		
Washtucna #3	A2071	235	1992		-3.9	500	
NORTHWEST BASIN							
Ephrata #1							
Ephrata #2	GR9081	17	1941				
Ephrata #3	GR8719	288	2004	-2.9		450	607
Ephrata #4	G0802	238	2004	-1.0		294	323
Ephrata #5	GR1066	260	2004	-4.0		484	584
Ephrata #6	GR1074	148	2004	1.4			
Ephrata #7							

Table 5

Potential Depths of Static and Dynamic Water Levels in 2060

Wells highlighted in gray shading are decommissioned or currently not operational.

Wells with predicted static or dynamic water levels greater than 700 feet below ground surface are highlighted in bold type.

well name	GWMA ID	most recent DTW (ft)	year	obs av static change (ft/yr)	predicted future static change (ft/year)	predicted approx. static DTW in 2060	predicted approx. dynamic DTW in 2060
Ephrata #8							
Ephrata #9	GR1076	81	2004	-1.4		159	367
Ephrata #10	GR8717	229	2004	-0.5	-5.9	257 to 558	362 to 633
George #1	GR4546	27	2012	0.2	-0.5	48	128
George #2	GR0281	27	2012	0.1	-0.5		
George #3		321	2011				
Quincy #1	GR7650	275	1937				
Quincy #2							
Quincy #3	GR0553	24	1970		0.1		
Quincy #4	GR0556	17	1981		-0.6	61	258
Quincy #5	GR7651	0	1983		0.0		
Soap Lake #1	GR9309	0	1975		-0.87	74	99
Soap Lake #2							
Soap Lake #3	GR9226	57	1952				
SOUTHWEST BASIN							
Mattawa #1	**GR3507**	**582**	**1985**	**-9.2**	**-1.0**	**658 to 912**	**738 to 992**
Mattawa #2	GR3508				-0.4		
Mattawa #3	GR3509	295	1993		-1.2	378	
Mattawa #4		290	2010				
Royal City #1	G1461	471	2005	1.2	-0.81	516	
Royal City #2	GR1644	567	2005	0.6			
Royal City #3	**GR1924**	**580**	**2005**		**-1.3**	**652**	**750**
Royal City #4							

Table 6
Groundwater Geochemistry Summary
Wells highlighted in gray shading are decommissioned or currently not operational.
Wells pumping predominantly ancient, or fossil, groundwater are highlighted in bold type.

well name	GWMA ID	C-14 age (yrs)	PMC	TU	d D	d O18	Na+K (meq/l)	Ca (meq/l)	Mg (meq/l)	SO4 (meq/l)	SiO2 (meq/l)
NORTHERN BASIN											
Almira #1											
Almira #2	L2036	1630	8.61	1.57			2.33		4.04	2.56	0.84
Almira #3	**L0517**	**9350**	**31.2**	**0.29**	**-133.8**	**-16.6**					
Almira #4	L2034					-17.4	1.51	0.88	1.39	0.67	1.25
Creston #1	L2117	2460	73.6	1.6	-126.5	-16.15	0.76	2.2	1.29	0.57	1.42
Creston #2	L0567	2480	73.5	2.72	-129.1	-15.78	0.59	1.55	0.92	0.38	1.35
Davenport #1	L0458										
Davenport #2	L0462										
Davenport #3	L0461										
Davenport #4	L0454										
Davenport #5	L1920										
Davenport #6	**L0465**	**15000**	**8.88**	**0.09**	**-143.3**	**-18.42**	**2.21**	**0.54**	**0.28**	**0.06**	
Davenport #7	**L0463**	**23000**	**5.66**	**0.12**	**-144.5**	**-18.63**	**1.6**	**0.85**	**0.43**	**0.14**	**1.27**
Harrington #1							1.31	1.75	2.21	0.91	1.6
Harrington #2											
Harrington #3	L1681	1570	82.3	2.25	-128.8	-16.29	1.51	2.64	2.44	1.3	1.56
Reardan #2											
Reardan #5											
Reardan #6	L0485			4.22			0.97	1.99	1.24	0.59	2.46
Reardan #7											
Reardan #8	**L0495**	**14970**		**0.01**			**0.84**	**1.24**	**0.86**	**0.18**	**1.33**
Ritzville #1	A2756										
Ritzville #3											
Ritzville #5											
Ritzville #6	A0563										
Ritzville #7	A0559						1.54	1.45	1.13	0.56	1.49
Ritzville #8	**A0560**	**15520**	**14.5**	**0.07**	**-142.2**	**-16.85**	**2.72**	**0.32**	**0.21**	**0.19**	**1.99**
Sprague #1											
Sprague #2											
Sprague #3	**L0216**	**18370**	**10.2**	**0.02**		**-16.61**	**1.52**	**0.6**	**0.27**	**0.04**	**1.97**
Sprague #4					-116.3	-14.2					
Wilbur #2											
Wilbur #3	L0547	1880	79.2	1.6	-132.2	-16.67	1.09	2.12	1.55	0.81	1.11
Wilbur #4	**L2075**	**5100**	**53**	**0.3**	**-137.8**	**-18.34**	**0.74**	**1.29**	**0.91**	**0.31**	**1.21**
Wilson Creek #1	GR9524										
Wilson Creek #2	GR1152				-126.1	-15.81	0.75	1	0.76	0.27	1.02

Table 6
Groundwater Geochemistry Summary
Wells highlighted in gray shading are decommissioned or currently not operational.
Wells pumping predominantly ancient, or fossil, groundwater are highlighted in bold type.

well name	GWMA ID	C-14 age (yrs)	PMC	TU	d D	d O18	Na+K (meq/l)	Ca (meq/l)	Mg (meq/l)	SO4 (meq/l)	SiO2 (meq/l)
Wilson Creek #3	GR1152				-126.1	-15.16	1.31	2	1.27	0.81	0.99
CENTRAL BASIN											
Connell #1											
Connell #2											
Connell #3	F4297	3350		3.47	-138	-16.53	2.77	1.31	0.79	0.86	2.21
Connell #4	F0479										
Connell #5	F0480				-148.5	-17.76	2.92	0.57	0.19	0.52	1.94
Connell #6	F0492	3500	65	3.4	-145.5	-18.23	2.29	2.03	1.37	1.24	1.62
Connell #8	F0380	3730	62.9	3.29	-140.8	-17.69	1.52	2.43	1.58	0.92	1.82
Connell #9	F4121				-134.5	-17	1.6	1.4	1.13	0.62	0.94
Connell #10											
Hatton #1	A0337										
Hatton #2	A0016						1.84	1.48	1.4	1.1	1.56
Kahlotus #1											
Kahlotus #2	F4147										
Kahlotus #3	G0916										
Lind #1	A2483										
Lind #2											
Lind #3	A0136										
Lind #4	A0149										
Lind #6	A0148										
Lind #7	**A0135**				**-138.6**	**-16.81**	**2.69**	**0.85**	**0.36**	**0.49**	**1.95**
Lind #8	**A1480**				**-139.5**	**-17.56**	**3.35**	**0.12**	**0.06**	**0.08**	**2.76**
Mesa #1	F4098				-131.6	-16.36	0.72	3.23	2	0.94	1.05
Mesa #2	F4104	1710	80.8	8.45	-125.8	-15.44	0.99	2.16	1.6	0.85	1.07
Moses Lake #3	GR6094				-147.5	-17.37	3.48	0.2	0.1	0.43	2.16
Moses Lake #4	**GR0837**	**6550**	**44.2**	**1.1**	**-138.8**	**-16.3**	**3.82**	**0.95**	**0.696**	**1.03**	**1.56**
Moses Lake #7	**GR0617**	**7940**	**37.2**	**0.62**	**-142**	**-17.37**	**3.63**	**0.3**	**0.16**	**0.66**	**1.8**
Moses Lake #8	**GR6186**	**17570**	**11.2**	**0.74**	**-140.2**	**-16.67**					
Moses Lake #9	**GR6140**	**21220**	**7.12**	**0.38**	**-143.2**	**-17.77**	**4.11**	**0.08**	**0.06**	**0.46**	**2.59**
Moses Lake #10	**GR6141**	**13426**	**18.8**	**0.61**	**-141.5**	**-17.43**	**3.03**	**0.63**	**0.46**	**0.49**	**1.77**
Moses Lake #12	GR1379	680	91.8	5.72	-125.9	-15.75	0.87	2.21	2	0.43	1.52
Moses Lake #14	GR6087				-143.9	-17.38	3.96	0.19	0.11	0.68	1.61
Moses Lake #17	**GR1692**	**12940**	**20**	**3.23**	**-139.2**	**-17.28**	**3.83**	**0.22**	**0.17**	**0.44**	**1.38**
Moses Lake #18	GR1946	930	89.1	6.37	-130.7	-15.4	1.92	1.78	1.6	0.52	2.36
Moses Lake #19	GR6175										
Moses Lake #21	GR1802				-137.6	-16.8	2	0.86	0.63	0.54	0.85

Table 6
Groundwater Geochemistry Summary
Wells highlighted in gray shading are decommissioned or currently not operational.
Wells pumping predominantly ancient, or fossil, groundwater are highlighted in bold type.

well name	GWMA ID	C-14 age (yrs)	PMC	TU	d D	d O18	Na+K (meq/l)	Ca (meq/l)	Mg (meq/l)	SO4 (meq/l)	SiO2 (meq/l)
Moses Lake #23	GR6092				-136.1	-15.94	3.25	0.27	0.2	0.48	2
Moses Lake #24	**GR1938**	**7070**	**41.5**	**1.57**	**-130.8**	**-17.3**					
Moses Lake #28	GR0635				-133.4	-16.68	2.05	0.84	0.58	0.54	1.87
Moses Lake #29	GR8244	150	98.1	5.81	-126	-15.1	1.12	2.09	1.23	0.35	1.02
Moses Lake #31	GR6174										
Moses Lake #33	**GR6183**	**23740**	**5.2**	**0.03**	**-145.8**	**-17.54**	**3.11**	**0.21**	**0.11**	**0.41**	**2.56**
Odessa #1			73								
Odessa #2											
Odessa #3	L1455	2300		2.06	-125.4	-14.36	1.95	1.49	1.06	0.73	1.21
Odessa #4	**L0053**	**26000**	**3.81**	**0.03**			**3.57**	**0.06**	**0.05**	**0.03**	**2.11**
Othello #2	A0250				-142.4	-17.26	3.17	0.76	0.67	0.8	1.26
Othello #3	A1466				-142.5	-17.39	3.46	0.38	0.42	0.6	1.32
Othello #4	A1579				-144.1	-17.9	3.95	0.17	0.12	0.67	1.53
Othello #5	A0004										
Othello #6	**A1581**	**22900**	**5.7**	**0.88**	**-145.1**	**-18.9**	**4.12**	**0.22**	**0.19**	**0.57**	
Othello #7	A1582				-144.1	-17.73	3.58	0.26	0.17	0.687	1.65
Othello #8	**A1532**	**24000**	**4.79**	**0.04**	**-145**	**-18.12**	**3.76**	**0.18**	**0.1**	**0.5**	**1.53**
Warden #4	GR4448										
Warden #5	G1616		100	7.4	-123.9	-15.9	4.83	2.86	4.32	1.65	1.15
Warden #6	GR3215	3500	63	5.8	-132	-16.7	2	1.14	0.81	0.63	
Warden #7	GR1922	3250	66.7	9.8	-131.3	-16.8	1.62	1.12	0.76	0.5	1.62
Washtucna #2	A2076			0.42							
Washtucna #3	A2071			0.16			1.98	1.5	1.78	0.3	1.53
NORTHWEST BASIN											
Ephrata #1											
Ephrata #2	GR9081				-127.3	-15.76	0.84	1.42	1.11	0.38	1.81
Ephrata #3	GR8719				-133.7	-15.97	0.84	1.29	0.91		1.62
Ephrata #4	**G0802**	**7320**	**40.2**	**0.24**	**-129.1**	**-15.7**					
Ephrata #5	GR1066										
Ephrata #6	GR1074										
Ephrata #7											
Ephrata #8											
Ephrata #9	GR1076	3390	65.6	2.14	-128.8	-15.54	0.83	1.17	0.93	0.27	1.69
Ephrata #10	**GR8717**	**14660**	**16.1**	**0.01**	**-136.7**	**-17.02**	**1.14**	**0.94**	**0.88**	**0.3**	
George #1	GR4546						0.65	2.34	2.42	0.71	1.06
George #2	GR0281	1980	78.2		-130	-15.68	0.56	2.22	2.32	0.67	2.74
George #3											

Table 6
Groundwater Geochemistry Summary
Wells highlighted in gray shading are decommissioned or currently not operational.
Wells pumping predominantly ancient, or fossil, groundwater are highlighted in bold type.

well name	GWMA ID	C-14 age (yrs)	PMC	TU	d D	d O18	Na+K (meq/l)	Ca (meq/l)	Mg (meq/l)	SO4 (meq/l)	SiO2 (meq/l)
Quincy #1	GR7650	1520	82.8	7.12	-127	-15.8	1.1	3.38	1.98	1.71	1.66
Quincy #2			83.9								
Quincy #3	GR0553				-125.8	-15.8	1.38	2.49	1.54	1.12	1.74
Quincy #4	GR0556				-126.9	-15.9	1.28	2.52	1.45	1.1	1.62
Quincy #5	GR7651	1600	82.3	7.8	-129	-16.1	1.08	3.07	1.73	1.4	1.59
Soap Lake #1	**GR9309**	**10570**	**26.8**	**0.4**	**-135.6**	**-16**	**1.32**	**1.1**	**0.75**	**0.36**	**1.91**
Soap Lake #2											
Soap Lake #3	**GR9226**	**12590**	**20.9**	**0.03**	**-139.1**	**-16.21**	**1.06**	**1.1**	**0.76**	**0.37**	**1.8**
SOUTHWEST BASIN											
Mattawa #1	GR3507				-135.4	-16.72	0.6	2.11	1.11	0.92	1.09
Mattawa #2	**GR3508**	**7020**		**0.31**	**-127.8**	**-15.72**	**1.19**	**0.96**	**0.67**	**0.37**	**1.45**
Mattawa #3	GR3509				-135.4	-17.01	1.15	0.95	0.69	0.23	1.26
Mattawa #4											
Royal City #1	G1461	7860	37.6	5.4	-134.5	-16.34	1.3	2.83	2.67	1.87	1.39
Royal City #2	GR1644	3930	61.3	10.6	-138.3	-17.45	1.72	2.62	2.34	2.19	1.15
Royal City #3	**GR1924**	**22320**	**6.21**	**0.06**	**-152.1**	**18.7**	**3.27**				
Royal City #4											
GWMA-WIDE STATISTICS											
average		9168									
median		7020									
maximum		26000									
minimum		150									

Yrs – years; **PMC** – percent modern carbon; **TU** – tritium units; **d** – delta; **D** – deuterium; **O** – oxygen; **meq/l** – molar equivalents per liter.

Table 7
Summary of Risk Factors
Wells highlighted in gray shading are decommissioned or currently not operational.
Bold type denotes risk factor met.

well name	hydrogeologic unit	Dynamic drawdown >100 feet	Water level declines >2 ft/yr	Predicted water level >700 ft bgs in 2060	Predominantly fossil groundwater	Future water demand exceeds current pumping capacity
NORTHERN BASIN						
Almira #1	Tpr, Tr, Tgsb		ND	ND	ND	
Almira #2	Tpr, Tr, Tgsb					
Almira #3			**X**		**X**	
Almira #4	Tgsb	ND				
Creston #1	Tpr, Tr	ND		ND		
Creston #2	Tpr, Tr, Tgsb	ND	**X**	ND		
Davenport #1				ND	ND	
Davenport #2	Tpr, Tr	**X**	**X**	ND	ND	
Davenport #3	Tpr, Tr, Tgsb	ND	ND	ND	ND	
Davenport #4	Tpr, Tr		ND	ND	ND	
Davenport #5	Tpr, Tr, Tgsb	ND	ND	ND	ND	
Davenport #6	Tgsb		**X**	**X**	**X**	
Davenport #7	Tgsb	**X**		ND	**X**	
Harrington #1	Tpr, Tr	ND	ND	ND		
Harrington #2	Tpr, Tr	ND	ND	ND	ND	
Harrington #3	Tpr, Tr					
Reardan #2	Tpr, Tr		ND	ND	ND	
Reardan #5		ND	ND	ND	ND	
Reardan #6	Tpr, Tr					
Reardan #7		ND	ND	ND	ND	
Reardan #8	Tpr, Tr, Tgsb	**X**		ND	**X**	
Ritzville #1	Tf	ND		ND	ND	
Ritzville #3	Tpr, Tr, Tf	**X**	ND	ND	ND	
Ritzville #5		ND	ND	ND	ND	**Drawdown limited capacity in 2012**
Ritzville #6	Tpr, Tr, Tf	ND		ND	ND	
Ritzville #7	Tf, Tgsb	**X**		ND		
Ritzville #8	Tgsb	ND	**X**	**X**	**X**	
Sprague #1	Sediment	ND	ND	ND	ND	
Sprague #2		ND	ND	ND	ND	
Sprague #3	Tf, Tgsb	ND			**X**	
Sprague #4	Tpr, Tr, Tf, Tgsb	ND		ND		
Wilbur #2	Tpr, Tr, Tgsb	**X**	ND	ND	ND	
Wilbur #3	Tpr, Tr, Tgsb					
Wilbur #4	Tpr, Tr, Tgsb	**X**		ND	**X**	

Table 7
Summary of Risk Factors
Wells highlighted in gray shading are decommissioned or currently not operational.
Bold type denotes risk factor met.

well name	hydrogeologic unit	Dynamic drawdown >100 feet	Water level declines >2 ft/yr	Predicted water level >700 ft bgs in 2060	Predominantly fossil groundwater	Future water demand exceeds current pumping capacity
Wilson Creek #1	Tgsb		ND	ND	ND	
Wilson Creek #2	Tgsb					
Wilson Creek #3	Tgsb		**X**			
CENTRAL BASIN						
Connell #1		ND	ND	ND	ND	
Connell #2		ND	ND	ND	ND	
Connell #3	Tpr, Tr, Tf	**X**				
Connell #4	Tpr, Tr, Tf, Tgsb	**X**	**X**		ND	
Connell #5	Tpr, Tr, Tf	**X**	**X**	**X**		**Occurs by 2030**
Connell #6	Tpr, Tr Tf, Tgsb		**X**			
Connell #8	Tf, Tgsb		**X**	**X**		
Connell #9	Tf	ND				
Connell #10	Tf, Tgsb	ND		**X**	ND	
Hatton #1	Tpr, Tr, Tf, Tgsb	ND	**X**	**X**	ND	
Hatton #2	Tf, Tgsb	ND				
Kahlotus #1		ND		ND	ND	
Kahlotus #2	Tf	**X**	ND	ND	ND	**Occurs by 2030**
Kahlotus #3	Tgsb	ND	**X**	**X**	ND	
Lind #1		ND	ND	ND	ND	
Lind #2		ND	ND	ND	ND	
Lind #3			ND	ND	ND	
Lind #4	Tf, Tgsb	ND	ND	ND	ND	**Drawdown limited capacity in 2012**
Lind #6	Tf, Tgsb	ND		ND	ND	
Lind #7	Tgsb, deep GRB		**X**	**X**	**X**	
Lind #8	Tgsb, deep GRB		**X**		**X**	
Mesa #1	Sediment		ND	ND		**Occurs by 2030**
Mesa #2	Sediment	ND	ND	ND		
Moses Lake #3	Tpr, Tr, Tf, Tgsb		**X**			
Moses Lake #4	Tgsb		**X**		**X**	
Moses Lake #7	Tgsb	**X**	**X**		**X**	
Moses Lake #8	Tf, Tgsb	**X**			**X**	
Moses Lake #9	Tgsb	**X**	**X**	**X**	**X**	**Occurs by 2030**
Moses Lake #10	Tf	**X**	**X**		**X**	
Moses Lake #12	Tf	ND				
Moses Lake #14	Tgsb	**X**	**X**			

Table 7
Summary of Risk Factors
Wells highlighted in gray shading are decommissioned or currently not operational.
Bold type denotes risk factor met.

well name	hydrogeologic unit	Dynamic drawdown >100 feet	Water level declines >2 ft/yr	Predicted water level >700 ft bgs in 2060	Predominantly fossil groundwater	Future water demand exceeds current pumping capacity
Moses Lake #17	Tgsb	**X**	**X**	**X**	**X**	
Moses Lake #18	Tf	**X**	**X**			
Moses Lake #19	Tf			ND	ND	
Moses Lake #21	Tf		**X**			
Moses Lake #23	Tf, Tgsb			ND		
Moses Lake #24	Tf		**X**		**X**	
Moses Lake #28	Tf	ND				
Moses Lake #29	Sediment	ND		ND		
Moses Lake #31	Tgsb	**X**	**X**	ND	ND	
Moses Lake #33	Tgsb	**X**	**X**	ND	**X**	
Odessa #1		ND	ND	ND	ND	
Odessa #2		ND	ND	ND	ND	
Odessa #3	Tpr, Tr, Tgsb		**X**	**X**		
Odessa #4	Tgsb				**X**	
Othello #2	Tpr, Tr, Tf	ND		ND		
Othello #3	Tpr, Tr, Tf			ND		
Othello #4	Tf		ND	ND		
Othello #5	Tf	**X**			ND	**Occurs by 2030**
Othello #6	Tpr, Tr, Tf	**X**	**X**	ND	**X**	
Othello #7	Tf	**X**	ND	**X**		
Othello #8	Tpr, Tr, Tf	**X**			**X**	
Warden #4	Tpr, Tr, Tf	**X**	ND	ND	ND	
Warden #5	Tpr, Tr, Tf	**X**				**Occurs by 2060**
Warden #6	Tf, Tgsb			ND		
Warden #7	Tgsb		**X**	**X**		
Washtucna #2	Tf, Tgsb			ND	ND	**Occurs by 2030**
Washtucna #3	Tgsb		**X**			
NORTHWEST BASIN						
Ephrata #1		ND	ND	ND	ND	
Ephrata #2	Tpr, Tr, Tf		ND	ND		
Ephrata #3	All units	**X**	**X**			
Ephrata #4	All units				**X**	**Occurs by 2030**
Ephrata #5	Tpr, Tf, Tf	**X**	**X**		ND	
Ephrata #6	All units	**X**		ND	ND	
Ephrata #7	Sediment	ND	ND	ND	ND	
Ephrata #8	Sediment	ND	ND	ND	ND	

Table 7
Summary of Risk Factors
Wells highlighted in gray shading are decommissioned or currently not operational.
Bold type denotes risk factor met.

well name	hydrogeologic unit	Dynamic drawdown >100 feet	Water level declines >2 ft/yr	Predicted water level >700 ft bgs in 2060	Predominantly fossil groundwater	Future water demand exceeds current pumping capacity
Ephrata #9	All units	**X**				
Ephrata #10	All units	**X**	**X**		**X**	
George #1	Tpr, Tr					
George #2	Tpr, Tr			ND		
George #3	Tf	ND	ND	ND	ND	
Quincy #1	Tpr, Tr, Tf		ND	ND		
Quincy #2	Tpr, Tr, Tf	ND		ND	ND	
Quincy #3	Tpr, Tr, Tf	**X**				**Occurs by 2030**
Quincy #4	Tpr, Tr, Tf	**X**				
Quincy #5	Tpr, Tr, Tf					
Soap Lake #1	Tgsb, deep GRB				**X**	
Soap Lake #2		ND	ND	ND	ND	
Soap Lake #3	Tgsb, deep GRB			ND	**X**	
SOUTHWEST BASIN						
Mattawa #1	Tpr, Tr		**X**	**X**		
Mattawa #2	Tf	ND		ND	**X**	**Occurs by 2060**
Mattawa #3	Tpr, Tr, Tf	ND				
Mattawa #4			ND	ND	ND	
Royal City #1	Tf	ND				
Royal City #2	Tpr, Tr, Tf	ND		ND		**Occurs by 2060**
Royal City #3	Tf			**X**	**X**	
Royal City #4	Tf	ND	ND	ND	ND	

Tpr – Priest Rapids Member, Wanapum Basalt; **Tr** – Roza member, Wanapum Basalt; **Tf** – Frenchman Springs member, Wanapum Basalt; **Tgsb** – Sentinel Bluffs Member, Grande Ronde Basalt; **GRB** – Grande Ronde Basalt; **ND** – data not available or data set is incomplete.

OKANOGAN CO.
FERRY CO.
STEVENS CO.
CHELAN CO.
DOUGLAS CO.
LINCOLN CO.
SPOKANE CO.
GRANT CO.
KITTITAS CO.
ADAMS CO.
WHITMAN CO.
YAKIMA CO.
FRANKLIN CO.
GARFIELD CO.
BENTON CO.
COLUMBIA CO.
WALLA WALLA CO.
KLICKITAT CO.
WASHINGTON
OREGON

BREWSTER
PATEROS
BRIDGEPORT
COULEE DAM
GRAND COULEE
ELECTRIC CITY
CHELAN
ENTIAT
WATERVILLE
COULEE CITY
WILBUR
CRESTON
ALMIRA
DAVENPORT
REARDAN
MEDICAL LAKE
HARRINGTON
WILSON CREEK
ROCK ISLAND
SOAP LAKE
BEEZLEY HILLS
EPHRATA
ODESSA
SPRAGUE
QUINCY
MOSES LAKE
GEORGE
RITZVILLE
FRENCHMAN HILLS
WARDEN
LIND
ROYAL CITY
ENDICOTT
OTHELLO
SADDLE MOUNTAINS
HATTON
MATTAWA
WASHTUCNA
CONNELL
KAHLOTUS
MESA
US DEPT. OF ENERGY HANFORD SITE
SUNNYSIDE
WEST RICHLAND
RICHLAND
DAYTON
GRANDVIEW
MABTON
PROSSER
BENTON CITY
PASCO
WAITSBURG
KENNEWICK
COLLEGE PLACE
WALLA WALLA

BRITISH COLUMBIA
WASHINGTON
GWMA
IDAHO
Pacific Ocean
OREGON

LEGEND

- Cities and Towns Discussed in this Report
- All Other Cities and Towns
- County Boundary
- State Boundary
- Highways and Major Roads

Ground Surface Elevation

3300 feet
300 feet

MAP NOTES:
Date: October 24, 2012
Data Sources: USGS, ESRI

FIGURE 1

Locations of Municipalities Evaluated in this Report

Municipal Groundwater Supply Review
Columbia Basin GWMA

N

0 6 12 18
Miles

GWMA Columbia Basin Ground Water Management Area
OF ADAMS, FRANKLIN, GRANT AND LINCOLN COUNTIES

Σ²Π

GSI Water Solutions, Inc.

File Path: P:\Portland\207 - Franklin Conservation Dist\GIS\Project_mxds\Muni_GW_Supply_Review\Figure1_Municipalities.mxd

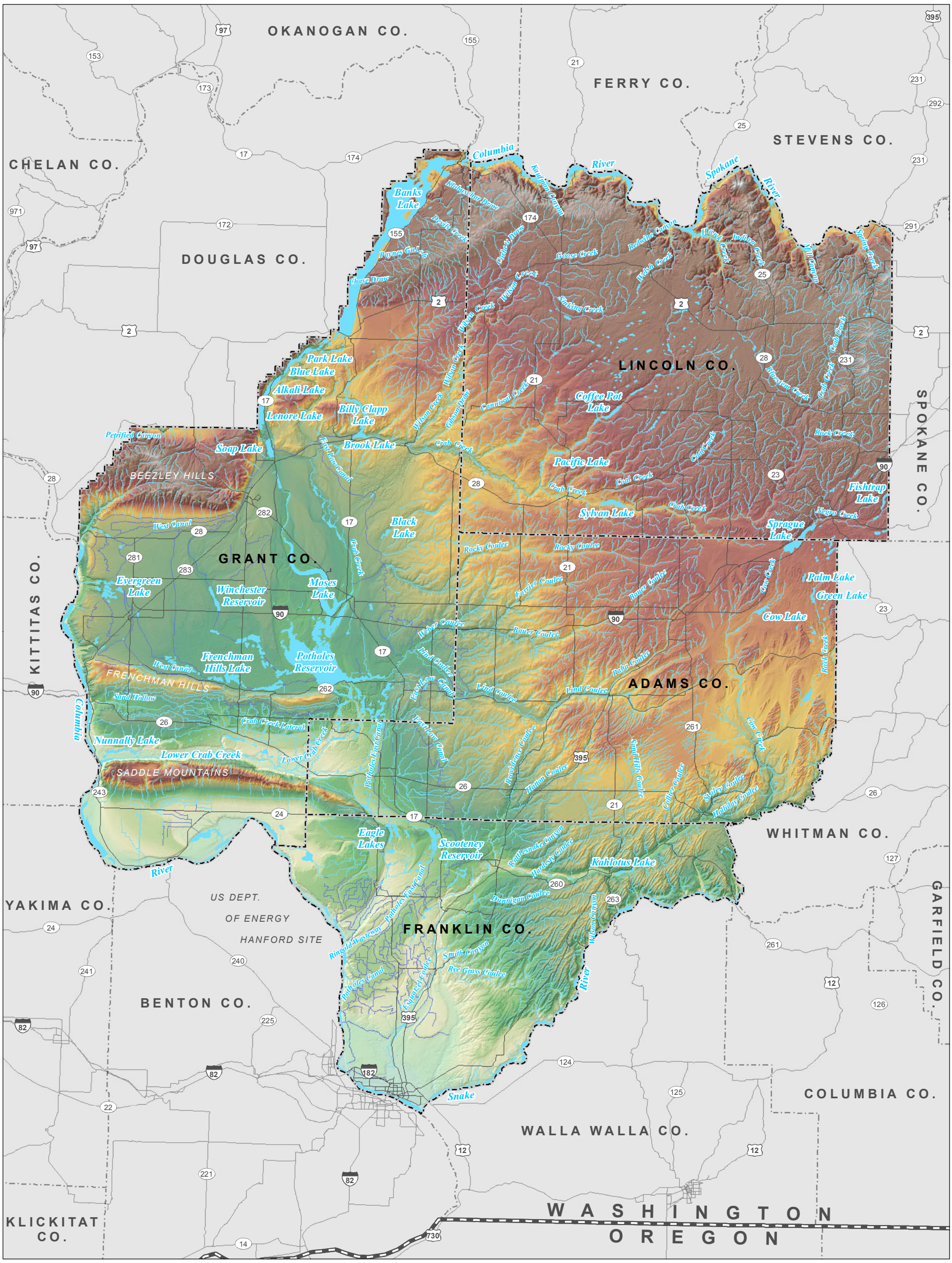

LEGEND

- Waterbodies
- Watercourses
- Canals
- County Boundary
- State Boundary
- Highways and Major Roads

Ground Surface Elevation

3300 feet

300 feet

MAP NOTES:
Date: October 16, 2012
Data Sources: USGS, ESRI

FIGURE 2

Locations of Major Waterbodies and Coulees in GWMA

Municipal Groundwater Supply Review
Columbia Basin GWMA

N

0 6 12 18
Miles

GWMA Columbia Basin Ground Water Management Area
OF ADAMS, FRANKLIN, GRANT AND LINCOLN COUNTIES

GSI Water Solutions, Inc.

File Path: P:\Portland\207 - Franklin Conservation Dist\GIS\Project_mxds\Muni_GW_Supply_Review\Figure2_Major_Water_and_Coulees.mxd

OKANOGAN CO.
FERRY CO.
STEVENS CO.
CHELAN CO.
DOUGLAS CO.
LINCOLN CO.
SPOKANE CO.
BEEZLEY HILLS
GRANT CO.
KITTITAS CO.
FRENCHMAN HILLS
ADAMS CO.
SADDLE MOUNTAINS
WHITMAN CO.
YAKIMA CO.
US DEPT. OF ENERGY HANFORD SITE
FRANKLIN CO.
GARFIELD CO.
BENTON CO.
COLUMBIA CO.
WALLA WALLA CO.
KLICKITAT CO.
WASHINGTON
OREGON

LEGEND

Geologic Structures

- High-Angle Fault
- Strike Slip Fault
- Thrust Fault
- Anticline
- Monocline
- Syncline
- Predicted Feeder Dikes

- County Boundary
- State Boundary
- Highways and Major Roads

Ground Surface Elevation

- 3300 feet
- 300 feet

MAP NOTES:
Date: October 16, 2012
Data Sources: USGS, ESRI

FIGURE 3

Locations of Major Folds, Faults, and Dikes in GWMA

Municipal Groundwater Supply Review
Columbia Basin GWMA

N

0 6 12 18
Miles

GWMA Columbia Basin Ground Water Management Area
OF ADAMS, FRANKLIN, GRANT AND LINCOLN COUNTIES

GSI Water Solutions, Inc.

File Path: P:\Portland\207 - Franklin Conservation Dist\GIS\Project_mxds\Muni_GW_Supply_Review\Figure3_Major_Folds_Faults_Dikes.mxd

Appendix K CROSS-CONNECTION CONTROL PROGRAM

ELEMENT 6 - CROSS CONNECTION CONTROL

As stipulated by WAC 246-290-490, any connection between a water system and a non-potable water source termed cross connection is prohibited. It is the City's responsibility to prevent cross connections. An effective program requires coordination between the purveyor, the customer, and the City's plumbing inspector. Elements to an effective program are: enforce adopted City policies; and provide personnel training in eliminating and preventing cross connections. The City of Davenport Municipal Code Chapter 13.05, UNLAWFUL CROSS-CONNECTIONS, provides guidelines on the proper installations of backflow prevention devices and penalties for improper or missing backflow devices. This ordinance addresses necessary items to implement and enforce a cross connection control program. A copy of the Municipal Code for the water system is included in Element 18.

In October 2005, the City of Davenport secured the services of Steve Herres, a Certified Cross Connection Control Specialist, to conduct an initial survey of the City's water system and assist the City in developing an approved cross connection control program. The initial survey reviewed the commercial and industrial water services. During the development of the cross connection control program, two City staff members obtained their CCC certification and will conduct a survey of residential services as time and resources allow. The City Foreman oversees and manages the Cross Connection Program.

The Cross Connection Control Manual, Accepted Procedure and Practice, published by the Pacific Northwest Section of the American Water Works Association, is a good reference for this subject.

The City's proposed cross connection control program includes the following:

1. All new industrial and commercial construction will be inspected for possible cross connections prior to the issuance of a building permit.

2. A list of backflow prevention assemblies approved for use in the State of Washington will be kept on file at the City's Water Department and made available to each water user. This list is available from DOH.

3. The following records shall be kept on file for reference:

   * Date of inspections
   * Results of inspections
   * Recommended Protection
   * List of all reduced pressure backflow assemblies, reduced pressure detector assemblies, double check valve assemblies, double check detector assemblies; pressure vacuum breaker assemblies, and air gaps used in lieu of an approved backflow prevention assembly in the system.
   * Test and maintenance reports

4. Industrial and commercial customers shall be responsible for hiring a certified Backflow Assembly Tester (BAT) to provide annual inspections of their cross connection control devices and to submit the BAT's test reports to the City.
5. Commercial sites shall be inspected on an annual basis in conjunction with Critical Material Inspections. Device locations are checked and any new process or water use noted and checked.
6. The City shall require backflow prevention devices for individual irrigation systems to be tested annually. The City will work to track new device installations in new home construction and existing residential units.

To complete the implementation of the CCC program, the City will periodically re-evaluate potential hazards and ensure that new system users are adhering to the CCC program.

To monitor compliance with the CCC program and maintain records of backflow devices in use, the City is building a database using TOKAY software that is specifically designed for tracking backflow devices in water systems. The program will meet record keeping requirements, generate notices for annual inspections, automate preparation of an annual CCCP Summary Report and generate any Backflow Incidents Reports as necessary. The City has recently completed inputting the test results of the initial survey into the TOKAY software.

DOH has several information packets available for educating system users about cross-connection control. These can be obtained by contacting the local DOH office.

Chapter 13.05 of the City's Municipal Code establishes requirements for cross-connection control prevention. All records of inspections, correspondence with DOH and system users, and annual reports are maintained at the City Hall. Chapter 13.05 is supplemented by Resolution 2006-02 which establishes the detailed cross connection control policy.

Cross Connection Control Program Initial Survey Results

The Town reviewed 119 commercial water services for potential cross connection issues. 73 of the services failed inspection. Common problems included the need for Hose Bib Vacuum Breakers on hose bibs, vacuum breakers on urinals, and irrigation systems missing backflow valves. Other violations included the need for premise isolation at several businesses, and supply lines missing backflow valves that serve boilers and other equipment. A summary of the Cross Connection Survey Results is included in this chapter.

Form 6 – Cross Connection Control Program

The following elements of the CCCP have or will be completed by the dates listed (check boxes for elements that have been completed and fill in target completion date):

Completed	Task	Target Date
X	Document authority to implement program	1990
X	Conduct initial system evaluation	11/05-7/06
X	Obtain a DOH-certified cross-connection specialist to implement program	10/05
X	Establish administrative and technical procedures	1/06
X	Provide for consumer education regarding cross-connection	1/06
X	Reevaluate existing facilities and evaluate new facilities	As Needed
X	Implement a process for ensuring assembly testing	1/06
X	Develop record-keeping and reporting system)including your annual CCCP Summary Report and any Backflow Incident Reports (as applicable)	5/06

City of Davenport

P.O. Box 26
Davenport, Washington 99122
(509) 725-4352

Sample letter
+ enclosures

January 9, 2006

Dear Davenport Water System Customer:

Washington State drinking water regulations, WAC 246-290-490, require public water systems to develop and implement cross-connection control programs. Cross-connection control programs help protect public health by preventing contamination of the drinking water as it is delivered to water system customers. The attached brochure explains what a cross connection is, describes typical household cross connections and what you can do to help protect your drinking water.

As part of our efforts to keep your drinking water safe, we are conducting a cross-connection control hazard survey of residential customers served by our system. The purpose of the survey is to help us determine if any of our residential customers have special plumbing or activities on their premises that could increase the risk of contamination to our water system.

For most residential customers, the cross-connection control hazard posed to the public water system is minimal. This is because your household plumbing was installed in compliance with the Uniform Plumbing Code. The Uniform Plumbing Code generally provides adequate protection of your water, potable water piping and our public water distribution system from cross connections. However, a few customers with special plumbing or activities on their premises may pose an increased health risk to other customers served by our system. These customers may need to have a backflow preventer installed on their service lines or provide alternate protection to prevent contamination of the public water system.

Please complete the attached questionnaire by checking the applicable boxes on the table; and return the completed, signed questionnaire by February 9, 2006 to the address shown on the letterhead.

Thanks in advance for filling out the questionnaire. We appreciate your cooperation in helping us to protect the drinking water we deliver to our customers. If you have any questions about the survey or how to fill out the questionnaire, please contact me at (509) 725-4352. We will review your questionnaire and determine whether we need to contact your for further information.

Sincerely,

Fred Bell
CCC Program Manager

Enclosures: CCC Brochure
Water Use Questionnaire

City of Davenport
Water Use Questionnaire
Residential Customers

Please indicate whether the special plumbing or activities listed below apply to your premises:

Yes	No	Plumbing or Activity Present on Customer's Premises*
		Underground sprinkler system
		Water treatment system (e.g., water softener)
		Solar heating system
		Residential fire sprinkler system
		Other water supply (whether or not connected to plumbing system)
		Sewage pumping facilities or grey water system
		Boiler or hot water heating system
		Hobby farm
		Animal watering troughs
		Swimming pool, hot tub or spa
		Greenhouse
		Decorative pond
		Photo lab or dark room
		Home-based business. If Yes, list type/describe (e.g., beauty salon, machine shop, etc.): _____ _____ _____

Please complete within 30 days and return to the City of Davenport. If you have any questions please contact the City Hall.

Completed by (print name): _____ Date: _____

Resident's Signature: _____

_____

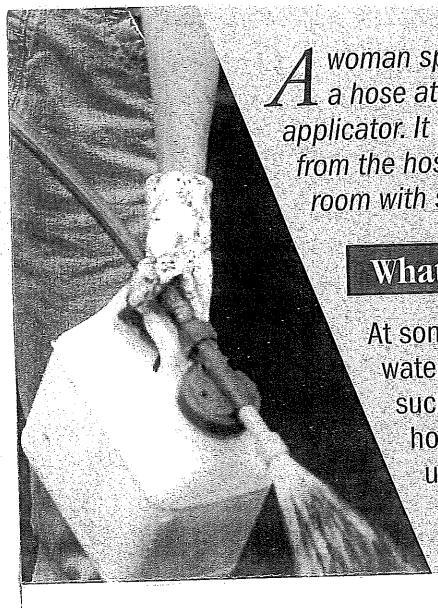

A woman sprays commercial weed killer on her lawn by using a hose attachment. After she finishes, she disconnects the applicator. It is a hot day, so she takes a refreshing drink of water from the hose. A short time later she is admitted to the emergency room with symptoms of poisoning.

What happened?

At some time while the woman was spraying weed killer, water pressure dropped, which resulted in the poison being sucked back into the hose. Later, when she drank from the hose, the poison inside was released with the water. She unknowingly poisoned herself.

American Water Works Association

©2005 American Water Works Association

Catalog No. 70020

Printed on Recycled Paper

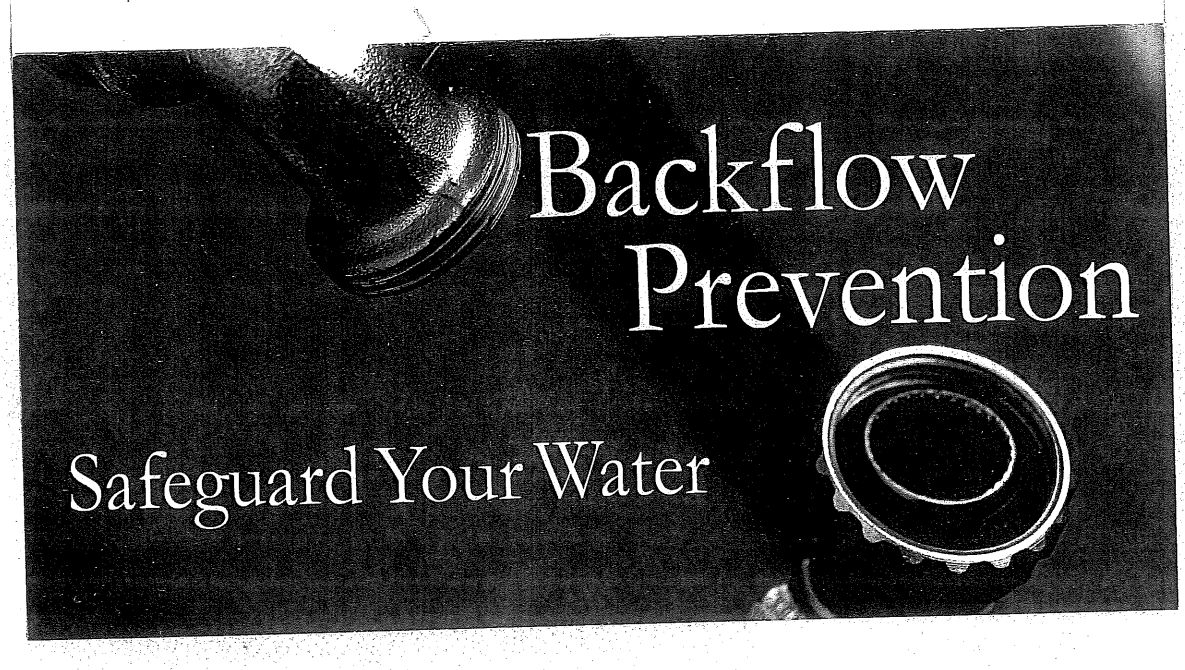

When water flows backward through the water supply system, it is called backsiphonage or backflow. When that water is accidentally mixed with hazardous chemicals or bacteria, it is called dangerous!

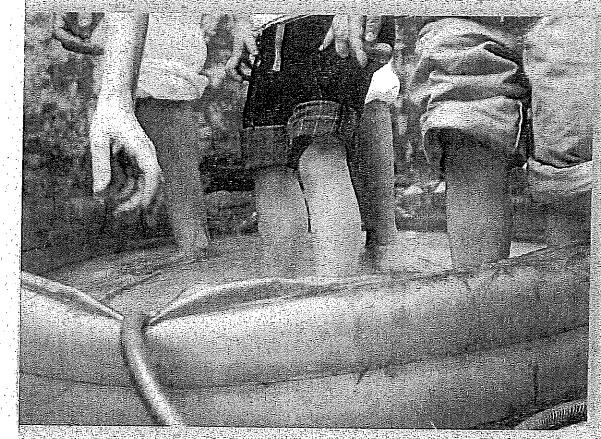

Never submerge a hose.

The danger comes when the hose—any hose—is connected to a harmful substance. If the pressure in a water main drops while your hose is submerged in polluted or contaminated water, the water (and whatever is in it) could be sucked back into your pipes and your drinking water supply. Water pressure drops are not uncommon. They can happen when firefighters battle a nearby blaze or before a city crew repairs a broken water main.

Some harmful substances you should be wary of are the chemicals used to fertilize your grass or the weed killer used on your lawn. The cleanser used on your kitchen sink could be hazardous if swallowed, as could the bacteria in the water from your wading pool or waterbed.

Fortunately, keeping your water safe from these contaminants is easy. Take the following precautions to protect your drinking water.

NEVER	submerge hoses in buckets, pools, tubs, or sinks.
ALWAYS	keep the end of the hose clear of possible contaminants.
DO NOT	use spray attachments without a backflow prevention device. The chemicals used on your lawn are toxic and can be fatal if ingested.
DO	buy and install inexpensive backflow prevention for all threaded faucets around your home. They are available at hardware stores and home-improvement centers.

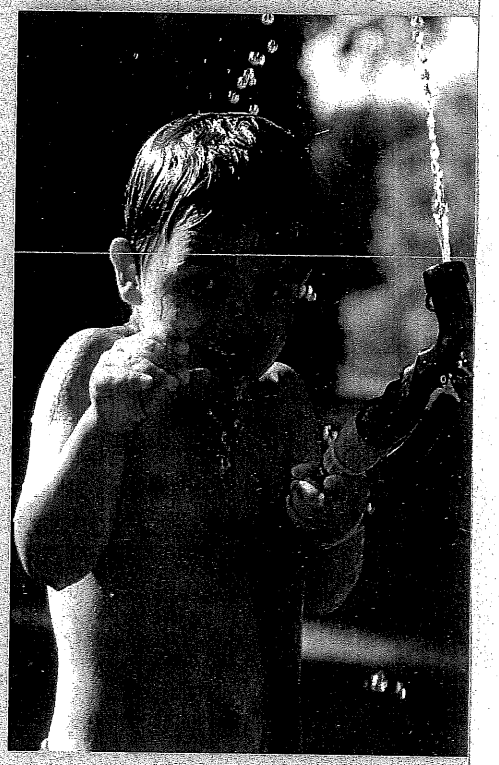

Always use backflow prevention devices.

Resolution No. 2006-2
Cross-Connection Control Policy

Finding of Fact

Whereas it is the responsibility of a water purveyor to provide water to the customer at the meter that meets Washington state water quality standards;

Whereas it is the water purveyor's responsibility to prevent the contamination of the public water system from the source of supply (i.e., to the customer's connection to the service pipe or meter);

Whereas it is a requirement of the Washington State Department of Health (DOH) for the Purveyor to establish a cross connection-control program satisfactory to DOH;

Whereas cross-connections within the customer's plumbing system pose a potential source for the contamination of the public water supply system;

Now be it resolved that the City of Davenport, hereinafter referred to as the Purveyor, establishes the following service policy to protect the purveyor-owned water system from the risk of contamination. For public health and safety, this policy shall apply equally to all new and existing customers.

Definitions

Unless otherwise defined, all terms used in this resolution pertaining to cross-connection control have the same definitions as those contained in WAC 246-290-010 of the Washington State Drinking Water Regulations.

Prevention of Contamination

The customer's plumbing system, starting from the termination of the Purveyor's water service pipe, shall be considered a potential high-health hazard requiring the isolation of the customer's premises by a DOH-approved, customer-installed and maintained reduced-pressure principle backflow assembly (RPBA) or reduced-pressure detector assembly (RPDA). The RPBA or RPDA shall be located at the end of the Purveyor's water service pipe (i.e., immediately downstream of the meter). Water shall only be supplied to the customer through a DOH-approved, customer-installed and maintained RPBA or RPDA.

Notwithstanding the aforesaid, the Purveyor, upon an assessment of the risk of contamination posed by the customer's plumbing system and use of water, may allow:

- A single-family or duplex residential customer to connect directly to the water service pipe, i.e., without a purveyor-approved DCVA or RPBA.

(a) Have all assemblies (e.g., RPBAs and/or DCVAs) that the Purveyor relies upon to protect the public water distribution system tested upon installation, annually thereafter and/or more frequently if requested by the Purveyor, after repair, and after relocation;
(b) Have all testing done by a purveyor-approved and currently DOH-certified Backflow Assembly Tester (BAT);
(c) Have the RPBA or DCVA tested in accordance with DOH-approved test procedures; and
(d) Submit to the Purveyor the results of the test(s) on Purveyor-supplied test report forms within the time period specified by the Purveyor.

6. The customer agrees to bear all costs for the aforementioned installation, testing, repair, maintenance and replacement of the RPBA, RPDA, DCVA or DCDA installed to protect the Purveyor's distribution system.

7. At the time of application for service, if required by the Purveyor, the customer agrees to submit to the Purveyor plumbing plans and/or a cross-connection control survey of the premises conducted by a purveyor-approved and DOH-certified Cross-Connection Control Specialist (CCS).

   The cross-connection control survey shall assess the cross-connection hazards and list the backflow preventers provided within the premises. The results of the survey shall be submitted prior to the Purveyor turning on water service to a new customer.

8. For classes of customers other than single-family residential, when required by the Purveyor, the customer agrees to periodically submit a cross-connection control re-survey of the premises by a DOH-certified CCS acceptable to the Purveyor. The Purveyor may require the re-survey to be performed in response to changes in the customer's plumbing or water use, or performed periodically (annually or less frequently) where the Purveyor considers the customer's plumbing system to be complex or subject to frequent changes in water use.

9. Within 30 days of a request by the Purveyor, a residential customer shall agree to complete and submit to the Purveyor a "Water Use Questionnaire" for the purpose of surveying the health hazard posed by the customer's plumbing system on the Purveyor's distribution system. Further, the residential customer agrees to provide within 30 days of a request by the Purveyor a cross-connection control survey of the premises by a DOH-certified CCS acceptable to the Purveyor.

10. The customer agrees to obtain the prior approval from the Purveyor for all changes in water use, and alterations and additions to the plumbing system, and shall comply with any additional requirements imposed by the Purveyor for cross-connection control.

11. The customer agrees to immediately notify the Purveyor and the local health jurisdiction of

sole purpose of establishing the Purveyor's minimum requirements for the protection of the public water supply system, commensurate with the Purveyor's assessment of the degree of hazard.

It shall not be assumed by the customer or any regulatory agency that the Purveyor's survey, requirements for the installation of backflow prevention assemblies, lack of requirements for the installation of backflow prevention assemblies, or other actions by the Purveyor's personnel constitute an approval of the customer's plumbing system or an assurance to the customer of the absence of cross connections therein.

18. The customer acknowledges the right of the Purveyor, in keeping with changes to Washington State regulations, industry standards, or the Purveyor's risk management policies, to impose retroactive requirements for additional cross-connection control measures.

The Purveyor will record the customer's agreement to the above terms for service on an "Application for Water Service," "Application for Change of Water Service," or other such form prepared by the Purveyor and signed by the customer.

Implementation of the Cross-Connection Control Policy

The Purveyor will engage the services of a DOH-certified CCS to develop, implement and be in responsible charge of the City of Davenport Water System's cross-connection control program.

The Purveyor, under the direction of the aforementioned CCS, will prepare a written cross-connection control program plan to implement the requirements of this resolution. The written program shall be consistent with this resolution and shall comply with the requirements of Chapter 246-290 WAC (Group A Drinking Water Regulations).

The Purveyor will use the most recently published editions of the following publications as references and technical aids:

1. *Cross-Connection Control Manual, Accepted Procedures and Practice,* published by the Pacific Northwest Section, American Water Works Association, or latest edition thereof.

2. *Manual of Cross-Connection Control,* published by the Foundation for Cross-Connection Control and Hydraulic Research, University of Southern California, or latest edition thereof.

3. *Cross-Connection Control Guidance Manual for Small Water Systems,* published by the DOH Office of Drinking Water.

The Purveyor will incorporate the written program plan into the Small Water System Management Program and will submit the plan to DOH for approval when requested.

Cross-Connection Control Program Plan
For the City of Davenport Water System

A. Requirement for Program

The City of Davenport, public water system identification number 18100N, hereinafter referred to as "the Purveyor", has the responsibility to protect the public water system from contamination due to cross connections. A cross connection may be defined as *"any actual or potential physical connection between a potable water line and any pipe, vessel, or machine that contains or has a probability of containing a non-potable gas or liquid, such that it is possible for a non-potable gas or liquid to enter the potable water system by backflow."*

All public water systems are required to develop and implement cross-connection control (CCC) programs. The CCC requirements are contained in Washington Administrative Code (WAC) 246-290-490 of the Group A Drinking Water Regulations. The minimum required elements of a CCC program are:

1. Establishment of legal authority and program policies;
2. Evaluation of premises for cross-connection hazards;
3. Elimination and/or control of cross connections;
4. Provision of qualified personnel;
5. Inspection and testing of backflow preventers;
6. Quality control of testing process;
7. Response to backflow incidents;
8. Public education for consumers;
9. Record keeping for CCC program; and
10. Special requirements for reclaimed water use.

Other CCC program requirements include:

1. Coordination with the Local Administrative Authority (LAA), i.e., the local building or plumbing official regarding CCC activities;
2. Prohibition of the return of used water into the public water system (PWS) distribution system; and
3. Inclusion of a written CCC program in a Water System Plan (WSP) or a Small Water System Management Program (SWSMP).

CCC Program Decision Summary Table for the City of Davenport

Decision Item	Decision
1. Type of Program [General, WAC 246-290-490(2)(e)]	
a. Premises isolation only	
b. Premises isolation and in-premises protection (combination program)	XX
2. Extent of Coordination with LAA [WAC 246-290-490(2)(d)]	
a. Information exchange	
b. Interaction	
c. Joint program	XX
3. Relationship with Customer [Element 1]	
a. Signed service agreement or contract	
b. Ordinance/resolution; implied service agreement	XX
4. Enforcement of Corrective Action [Element 1]	
a. Rely upon shut-off of water service	XX
b. Rely upon purveyor-installed premises isolation	
5. Assessment and Re-assessment of Hazard [Element 2]	
a. By purveyor's staff or equivalent	XX
b. By cross-connection control specialist (CCS) employed by customer; report reviewed by purveyor's CCS	
6. Location and Ownership of Premises Isolation Assembly [Element 3]	
a. On purveyor's service line	
b. On customer's service line	XX
7. CCS Option – Purveyor's Program Management [Element 4]	
a. Purveyor's staff member certified	
b. Inter-agency agreement or use other agency's CCS	
c. Contract with consultant CCS	XX
8. Testing of Assemblies [Element 5]	
a. By purveyor's staff or purveyor-employed backflow assembly tester (BAT)	
b. By customer-employed (contractor) BAT	XX
9. Cost Recovery [WAC 246-290-100(4)(h) and –105(4)(p)]	
a. Borne by all customers (general water rates)	
b. Assessed to specific class (commercial meters)	
c. Each customer directly bears cost	XX

Element 2: *Development and implementation of procedures and schedules for evaluating new and existing service connections to assess the degree of hazard.*

Initial Cross-Connection Hazard Surveys

The procedures for evaluating the backflow prevention requirements for new and existing customers are as follows:

1. For all ***new non-residential services***, the Purveyor will require that the customer submit with the application for water service an evaluation (performed at customer's expense) by a DOH-certified cross-connection control specialist (CCS) of the hazard posed by the proposed plumbing system, with recommendations for the installation at the meter of either a double-check valve assembly (DCVA) or a reduced-pressure principle backflow assembly (RPBA) or commensurate in-premises backflow protection. The Purveyor may accept the recommendations or submit the recommendations to a CCS employed by the PWS for peer review and concurrence, before acceptance.

   As an alternative to the above requirement for a survey by a CCS, the customer may agree to install an approved air gap (AG) or RPBA for premises isolation as a condition of service.

2. For all ***new residential services***, the Purveyor will require that the customer submit with the application for water service a completed "Water Use Questionnaire" If the customer's questionnaire indicates special plumbing, such as a lawn sprinkler system, or hazardous water use on the premises, the customer shall submit to the Purveyor an evaluation by a DOH-certified CCS of the hazard posed by the proposed special plumbing system, with recommendations for the installation at the meter of either a DCVA or an RPBA or commensurate in-premises protection.

   As an alternative to the above requirement for a survey by a DOH-certified CCS, the Purveyor, at his/her discretion may specify the backflow preventer required to be installed as a condition of service.

3. For all ***existing non-residential services***, the Purveyor will require the customer to submit to the Purveyor, within nine months of notification, an evaluation by a DOH-certified CCS, of the hazard posed by the plumbing system, with recommendations for the installation at the meter of either a DCVA or an RPBA or commensurate in-premises backflow preventers. The Purveyor may accept the recommendations or submit the recommendations to a CCS employed by the Purveyor for peer review and concurrence, before acceptance.

   As an alternative to the above requirement for a survey by a DOH-certified CCS, the customer may agree to install an AG or RPBA for premises isolation within 90 days of notification by the Purveyor or an alternate time period acceptable to the Purveyor.

4. For all ***existing residential services***, the Purveyor will require the customer to submit to the Purveyor, within four months of notification, a completed "Water Use Questionnaire." If the customer's reply indicates special plumbing or water use on the premises, the customer

The frequency of hazard re-assessments will be as shown in the table below:

Type of Service	Frequency of Re-Evaluation
Any services with reduced-pressure principle backflow assembly (RPBA) installed for premises isolation	None required as long as the RPBA passes annual tests and inspections
Commercial services with double-check valve assembly (DCVA) installed for premises isolation	Every two years and upon change in use or ownership
Commercial services when purveyor relies upon in-premises protection	Every two years and upon change in use, ownership, or plumbing system
Residential services with special plumbing where the purveyor relies upon compliance with Uniform Plumbing Code (UPC)	Every 2-3 years (questionnaire)
Residential services with DCVA installed for premises isolation	Every 4-5 years (questionnaire)
Residential services with no known special plumbing or water use on the premises	Every 4-5 years and upon change in use, ownership, or plumbing system (questionnaire)

The Purveyor will inform the customer that the Purveyor's survey of a customer's premises (whether by a representative of the Purveyor or through the evaluation of a questionnaire completed by the customer) is for the sole purpose of establishing the Purveyor's minimum requirements for the protection of the public water supply system, and that the required backflow protection will be commensurate with the Purveyor's assessment of the degree of hazard.

The Purveyor will also inform the customer or any regulatory agencies that the Purveyor's survey, requirements for the installation of backflow prevention assemblies, lack of requirements for the installation of backflow prevention assemblies, or other actions by the purveyor's personnel or agent do not constitute an approval of the customer's plumbing system or an assurance to the customer or any regulatory agency of the absence of cross connections.

requires the customer to bear all reasonable costs of service. The Purveyor will install the required DCVA or RPBA on the service, upstream of the meter, and charge the customer for the cost of the initial installation, and all future maintenance, testing, and repair, as set forth in the Purveyor's schedule of rates and charges. The failure of the customer to pay these costs shall constitute a breach of contract by the customer, and the Purveyor will proceed with the established delinquency of payment procedures. As an alternative, the customer may sign a service contract and install the required backflow preventer downstream of the meter in accordance with the Purveyor's installation standards described hereinafter.

5. **Approved Backflow Preventers and Installation**

All backflow preventers relied upon by the Purveyor to protect the public water system shall meet the definition of "approved backflow preventer" as contained in WAC 246-290-010. The Purveyor will obtain and maintain a current list of assemblies approved for installation in Washington State from the DOH Office of Drinking Water.

All backflow preventers will be installed in:

- The orientation for which they are approved;
- A manner and location that facilitates their proper operation, maintenance, and testing or inspection;
- A manner that will protect them from weather-related conditions such as flooding and freezing; and
- Compliance with applicable safety regulations.

Element 4: *Provision of qualified personnel, including at least one person certified as a CCS, to develop and implement the CCC program.*

1. **Program Administration:** The responsibility for administration of the CCC Program rests with the Purveyor. General policy direction and risk management decisions are established by the City of Davenport City council. By an inter-agency agreement, the Local Administrative Authority (LAA) may undertake certain administrative tasks, and the Purveyor may undertake additional tasks to assist the LAA.

2. The Purveyor will employ or have on staff at least one person certified by DOH as a CCS to develop and implement the CCC program. As an alternative, or when no staff or employees are properly qualified, the Purveyor may retain a DOH-certified CCS on contract to provide the necessary expertise and services.

3. The following cross-connection related tasks will be performed by or under the direction of the Purveyor's certified CCS (on staff or under contract):

   - Preparation of and recommendations regarding changes to the CCC program;
   - Performance of and/or reviews of CCC hazard evaluations;
   - Recommendations on the type of backflow preventer to be installed;
   - Recommendations on schedules for retrofitting of backflow preventers;
   - Inspections of backflow preventers for proper application and installation;
   - Reviews of backflow preventer inspection and test reports;
   - Reviews of backflow testing quality control information;
   - Recommendations and/or the granting of exceptions to mandatory premises isolation;
   - Participation in or cooperation with other water utility staff in the investigation of backflow incidents and other water quality problems;
   - Completion of Backflow Incident Reports; and
   - Completion of CCC Activity and Program Summary Reports.

4. The Purveyor may delegate other CCC program activities to other personnel who are not certified CCSs, including clerical support staff. These activities include:

   - Administration of paperwork associated with service agreements;
   - Mailing, collecting, and initial screening of hazard evaluation/water use questionnaires;
   - Mailing of assembly testing notices;
   - Receiving and screening of assembly testing reports;
   - CCC program database administration and record keeping;
   - Dissemination of public education material; and
   - Assisting tasks associated with coordination with the LAA.

The Purveyor may require a backflow preventer to be inspected and/or tested more frequently than once a year, when it protects against a high-health hazard or when it repeatedly fails tests or inspections.

3. **Responsibility for Inspection and Testing**

The Purveyor will be responsible for inspection and testing of all purveyor-owned backflow preventers.

The Purveyor will require the customer to be responsible for inspection and testing of backflow preventers owned by the customer. The customer shall employ, at customer expense, a DOH-certified BAT pre-approved by the Purveyor to conduct the inspection and test within the time period specified in the testing notice sent by the Purveyor. The test report shall be completed and signed by the BAT, and returned to the Purveyor, before the due date specified by the Purveyor. The customer may request an extension of the due date for returning a test report by submitting a written request to the Purveyor. The Purveyor may grant one extension up to 90 days.

4. **Approved Test Procedures**

The Purveyor will require that all assemblies relied upon to protect the public water system be tested in accordance with DOH-approved test procedures as specified in WAC 246-290-490(7)(d). Any proposal to use alternate test procedures must be approved by the Purveyor's CCS.

5. **Notification of Inspection and/or Testing**

The Purveyor will notify in writing all customers who own backflow preventers that are relied upon to protect the public water system to have their backflow preventer(s) inspected and/or tested. Notices will be sent out not less than 30 days before the due date of the inspection and/or test. The notice will also specify the date (up to 30 days after the due date of the inspection and/or test date) by which the inspection/test report must be received by the Purveyor.

6. **Enforcement**

When a customer fails to send in the inspection/test report within 15 days after the due date specified, and the Purveyor has not approved an extension to the due date, the Purveyor will take the following enforcement action:

- The Purveyor will send a second notice giving the customer an additional 15 days to send in the inspection/test report.
- If the customer has not sent in the inspection/test report within 10 days of the due date given in the second notice, the Purveyor will send a third notice, by certified mail, or by

inspection/test report forms submitted by the customer. The Purveyor's CCS may accept reports that are signed by a BAT not on the pre-approved BAT list provided that the same information as listed in "Pre-Approval Qualifications" is also submitted to the Purveyor.

The Purveyor's CCS will provide follow up on test reports that are deficient in any way.

The Purveyor's CCS will report incidences of fraud or gross incompetence on the part of any BAT to DOH Operator Certification program staff.

Element 7: *Development and implementation (when appropriate) of procedures for responding to backflow incidents.*

1. **Backflow Incident Response Plan**

The Purveyor's CCS will participate in developing a backflow incident response plan that will be part of the water system's emergency response program as required by WAC 246-290-415(2). The incident response plan will include, but will not be limited to:

- Notification of affected population;
- Notification and coordination with other agencies, such as DOH, the LAA, and the local health jurisdiction;
- Identification of the source of contamination;
- Isolation of the source of contamination and the affected area(s);
- Cleaning, flushing, and other measures to mitigate and correct the problem; and
- Apply corrective action to prevent future backflow occurrences.

2. **Technical Resources**

The Purveyor will use the most recently published edition of the manual, *Backflow Incident Investigation Procedures*, published by the PNWS-AWWA as a supplement to the Backflow Incident Response Plan for the **City of Davenport**.

Element 8: *Development and implementation of a cross-connection control public education program.*

1. **Customer Education**

The Purveyor will distribute with water bills or some other means, at regular intervals, public education brochures to system customers. For residential customers, such brochures will describe the cross-connection hazards in homes and the recommended assemblies or devices that should be installed by the homeowner to reduce the hazard to the public water system. The education program will emphasize the responsibility of the customer in

- applications, including manufacturer, make, model, size, dates of installation and inspections, and person performing inspections.

The Purveyor will maintain records on all assemblies that protect the public water system from contamination. At a minimum, the Purveyor will maintain records on all premises isolation assemblies required to protect the public water system. Where applicable, the above information will also be maintained for backflow preventers installed for in-premises protection that are relied upon by the Purveyor to protect the public water system.

By inter-agency agreement, the Purveyor will also maintain the above information for LAA required backflow preventers that are not relied upon by the Purveyor to protect the public water system.

- Action taken to discontinue water service to a customer; and
- Backflow incident known by the Purveyor to have contaminated the public water system or a customer's plumbing system.

2. *Written Agreement with Local Administrative Authority*

The Purveyor will pursue development of a written agreement with the Local Administrative Authority regarding the details of the coordination on CCC issues between the two parties. The agreement will include, but not be limited to, the following items:

- The purpose of the written agreement;
- Identification of the parties and other interested agencies;
- Delineation of responsibilities;
- Procedures regarding new service connections;
- Procedures regarding existing and changes to existing services;
- Special policies and procedures, such as for fire protection and irrigation services;
- Procedures regarding water service shut-offs, backflow incidents, and other events;
- Communications between parties; and
- Other contingencies.

3. *This CCC program has been developed in cooperation with the LAA for* ***the City of Davenport}*** *and has been mutually agreed upon by both parties.*

4. ***Prohibition of Return of Used Water.*** The PWS must prohibit the intentional return of used water to the Purveyor's distribution system per WAC 246-290-490 (2)(l).

Used water is defined as water that has left the control of the Purveyor. This includes water used for heating and cooling purposes and water that may flow back into the distribution system from customers with multiple connections.

It is the policy of the **City of Davenport** water system to:

- Prohibit the intentional return of used water to the distribution system by any customer served by the public water system; and
- Require that all customers with multiple connections, where the hydraulics permit the potential return of used water, to install a backflow preventer (DCVA or RPBA) commensurate with the degree of hazard at each point of connection.

5. ***"Unapproved Auxiliary Supplies.*** All water supplies other than those owned by the Purveyor are considered unapproved auxiliary supplies as defined in WAC 246-290-010. The Purveyor will require backflow protection for customers with auxiliary supplies on their premises as follows:

    - Per Table 9 of WAC 246-290-490, the Purveyor will require the installation of an

head losses incurred through the installation of experienced by backflow assemblies;

- That CCC program personnel be consulted in the design of water and wastewater treatment facilities and when proposals are made to receive or distribute reclaimed water;
- That operations under normal and abnormal conditions do not result in excessive pressure losses; and
- That adequate financial and administrative resources are available to carry out the CCC program.

AGREEMENT FORM

THIS AGREEMENT made and entered into in triplicate this 20th day of October, 2005 by and between The City of Davenport, (hereinafter-called OWNER) and Steve Herres (hereinafter called CONTRACTOR).

OWNER and CONTRACTOR, in consideration of the mutual covenants hereinafter set forth, agree as follows:

1.0 WORK

1.1 CONTRACTOR shall complete Work as specified or indicated in the specifications and Contract Documents. The Work is generally described as follows: CROSS CONNECTION CONTROL PROGRAM

CONTRACTOR shall provide professional services as necessary to complete the CROSS CONNECTION CONTROL PROGRAM.

2.0 CONTRACT TIMES AND LIQUIDATED DAMAGES

2.1 Contract Times:

2.1.1 CONTRACTOR will achieve Final Completion one year from the date on the above signed agreement.

2.2 Liquidated Damages:

2.2.1 OWNER and CONTRACTOR recognize that time is of the essence of this Agreement and that OWNER will suffer financial loss if the Work is not completed within the time specified in paragraph Contract Times above. They also recognize the delays, expense, and difficulties involved in proving in a legal or other dispute resolution proceeding the actual loss suffered by OWNER if the Work is not completed on time. Accordingly, instead of requiring any such proof, OWNER and CONTRACTOR agree that as liquidated damages for delay (but not as a penalty) CONTRACTOR shall pay OWNER five hundred dollars ($500.00) for each day that expires after the time specified in paragraph Contract Times above, for Full and Final Completion until the Work is complete.

3.0 CONTRACT PRICE

3.1 OWNER shall pay CONTRACTOR for completion of the Work and in accordance with the conformed Bid, which is included as an Exhibit to the Agreement, an amount equal to the sum of the amounts determined pursuant to the following:

3.1.1 TOTAL $9,790.00 CONTRACT PRICE (INCLUDING STATE SALES TAX):

NINE THOUSAND SEVEN HUNDRED NINETY DOLLARS AND NO ONE HUNDREDS
(Words)

$9,790.00 (includes Sales Tax)
(Figures)

4.0 CONTRACTOR'S REPRESENTATIONS

4.1 In order to induce OWNER to enter into this Agreement, CONTRACTOR'S representations are as set forth as follows:

4.1.1 CONTRACTOR has familiarized himself with the nature and extent of the contract Documents, Work, Work site, locality, general nature of work required by the Contract Documents and local conditions and federal, state, and local Laws and Regulations that in any manner may affect cost, progress, performance, or furnishing of Work.

4.1.2 CONTRACTOR has given OWNER written notice of conflicts, errors, ambiguities or discrepancies that it has discovered in the Contract Documents and the written resolution thereof by OWNER is acceptable to CONTRACTOR, and the Contract Documents are generally sufficient to indicate and convey understanding of terms and conditions for performing and furnishing Work.

4.1.3 CONTRACTOR shall provide a Certificate of Insurance.

5.0 CONTRACT DOCUMENTS

5.1 The Contract Documents, which comprise the entire Agreement between OWNER and CONTRACTOR concerning Work.

6.0 MISCELLANEOUS

6.1 No assignment by a party hereto of any rights under or interests in the Contract Documents will be binding on another party hereto without the written consent of the party sought to be bound; and specifically but without limitation monies that may become due and monies that are due may not be assigned without such consent (except to the extent that the effect of this restriction may be limited by law), and unless specifically stated to the contrary in any written consent to an assignment no assignment will release or discharge the assignor from any duty or responsibility under the Contract Documents.

6.2 OWNER and CONTRACTOR each binds itself, its partners, successors, assigns, and legal representatives to the other party hereto, its partners, successors, assigns, and legal representatives in respect of all covenants, agreements, and obligations contained in the Contract Documents.

6.3 All parties agree that the State of Washington shall be, and is hereby, named as an express third-party beneficiary of this contract, with full rights as such.

IN WITNESS WHEREOF, OWNER and CONTRACTOR have signed three copies of this Agreement. All portions of the Contract Documents have been signed or identified by OWNER and CONTRACTOR or by ENGINEER on their behalf.

OWNER_____ CONTRACTOR STEVE HERRES

BY_____ BY _____

DATE_____ DATE Oct 20, 2005

CORPORATE SEAL

CORPORATE SEAL

Address for giving notices

_____

_____

Address for giving notices

_____

_____

License No._____

Agent for service of process_____

(If CONTRACTOR is a corporation,
Attach evidence of authority to sign.)

CITY OF DAVENPORT

Charles A. Johnston
Mayor

Attest:

Irene E. Wilkie
City Clerk/Treasurer

CITY OF DAVENPORT CROSS CONNECTION CONTROL PROGRAM
SERVICES FOR CONSULTANT AND PROGRAM MANAGEMENT

SPECIFICATIONS FOR CONTRACT
SOFTWARE REQUIREMENTS

The contractor will provide software that will be commercially available to the City of Davenport. The software shall be specifically designed to manage Cross Connection Control Programs and provide comprehensive record keeping capabilities.

The software shall include fifteen months of unlimited support and updates. The cost of the software will include data entry of all customer names and addresses and information pertinent to the Cross Connection Control Program.

SECTION ONE
ORDINANCE AND POLICIES

The contractor will assist the City of Davenport with the preparation of the appropriate ordinance to establish a cross connection control program in accordance with state law and the ordinance will contain those provisions required by referenced section of regulations.

SECTION TWO
SURVEYS

The contractor will conduct, by personal visit, the commercial connections for the city which shall include a written report and recommendations for each of the sites. The contractor will also collect existing valve data for inclusion into the tracking database.

The contractor will provide a sample residential survey form that will be used by the City of Davenport to be mailed to each residential account. The contract will review each survey and make written recommendations on each connection in the City of Davenport.

The survey will be conducted by personnel who are duly qualified Cross Connection Control Specialist. The contractor will provide the required Cross Control Specialist, with certification, for one year to the City of Davenport for use to train and provide technical assistance. The city will pay up to $35.00 per hour if major problems are encountered beyond the scope of these specifications.

SECTION THREE
RECORD MAINTENANCE AND DOCUMENTATION

The contractor will provide records containing the following information in electronic format to the City of Davenport:

1) The results of the cross connection control survey.
2) The name and location of each cross connection discovered and the recommended corrective action for each.

The contractor shall provide these records in electronic format and provide the information to the City of Davenport for its use.

The contractor will complete and submit all documentation required by state law in accordance with the provisions and guidance established and applicable rules and regulations governing cross connection control programs.

SECTION FOUR
INDEPENDENT CONTRACTOR STATUS

The contractor shall have an independent contractor status. The responsibility of the conduct and control of the work involved in the survey will be solely with the contractor.

Neither the contractor, its personnel, nor its employees will be considered employees of the City of Davenport for any purpose and the employees of the contractor are not entitled to any benefits the City of Davenport provides to its employees.

SECTION FIVE
COOPERATION OF THE CITY OF DAVENPORT

The City of Davenport agrees to cooperate with the contractor in the conduct of the survey required herein by allowing the contractor personnel access to records dealing with water service, building permits and plans including, but not limited to, a list of names and addresses of designated water customers and/or accounts.

The City of Davenport will cause to be drafted, adopted and duly ratified an ordinance and policy requiring water customers and/or accounts to allow a survey of their buildings and the water and plumbing systems contained therein by the contractor for the purpose of conducting the survey.

SECTION SIX
LIABILITY

The survey and record keeping being performed under this contract will be performed entirely at the contractor's risk and the contractor assumes all responsibility for performance of the survey and record keeping. The contractor will carry, for the duration of this contract, public liability insurance in the amount of One Million and No/100 Dollars ($1,000,000.00) and workman's compensation insurance in reasonable amounts. The certificate of insurance shall name the City of Davenport as additional insured and shall be presented at the time of contract to the City of Davenport.

Appendix C
Backflow Incident Response Plan for a Small Water System

A. General

This Backflow Incident Response Plan should be considered a supplement to the Purveyor's Emergency Plan.

Purveyors should immediately begin a backflow incident investigation whenever the initial evaluation of a water quality complaint indicates that:

1. A backflow incident has occurred (i.e., drinking water supply has been contaminated) or may have occurred; or

2. The complaint can't be explained as a "normal" aesthetic problem.

Also, whenever a water main break (or power outage for pumped systems) causes a widespread loss of water pressure in the system (creating backsiphonage conditions), purveyors should initiate a check of distribution system water quality as a precursor to the need for a backflow incident investigation.

WAC 246-290-490 requires purveyors to notify DOH, the Local Administrative Authority and local health jurisdiction as soon as possible, but no later than the end of the next business day when a backflow incident contaminates the potable water supply (in the distribution system and/or in the customer's plumbing system). Purveyors should include a list of emergency contact telephone numbers at the beginning of the water system's O & M Manual, so that the information is readily available when an incident occurs.

A backflow incident investigation is often a team effort. The investigation should be made by or initially led by the DOH-certified Cross-Connection Control Specialist employed by the Purveyor. The investigation team may include state health (regional) staff, local health personnel and/or local plumbing inspectors.

Purveyors can get more detailed guidance on how to respond to a backflow incident from the manual, *Backflow Incident Investigation Procedures*, published by the Pacific Northwest Section, American Water Works Association (PNWS-AWWA). Contact information for the PNWS-AWWA is provided in Appendix F.

d. When the cross connection responsible for the system contamination is located, the Purveyor should discontinue water service to that customer, until the customer completes the corrective action ordered by the Purveyor.

3. **Isolation of Contaminated Portion of System**

   a. The Purveyor will isolate the portions of the system that are suspected of being contaminated by closing isolating valves; leave one valve open to ensure that positive water pressure is maintained throughout the isolated system.

   b. The Purveyor will be sure to notify all affected customers in the isolated area first and then notify other customers served by the system.

4. **Public Health Impacts**

   a. The Purveyor will seek immediate input from and work with state and local health agencies to accurately communicate and properly mitigate potential health effects resulting from the backflow incident.

   b. If appropriate, the Purveyor will refer customers that may have consumed the contaminant or had their household (or commercial) plumbing systems contaminated to public health personnel and Local Administrative Authorities (plumbing inspectors).

5. **Cleaning/Disinfecting the Distribution System**

   a. The Purveyor will develop and implement a program for cleaning the contaminated distribution system consistent with the contaminant(s) identified.

   b. Where both chemical and bacteriological contamination has occurred, the Purveyor will disinfect the system after the removal of the chemical contaminant.

   c. Where any bacteriological contamination is suspected, the Purveyor will provide field disinfection.

C. Additional Information on Cleaning/Disinfecting the Distribution System

Most chemical or physical contaminants can be flushed from the water distribution system or customer's plumbing system with adequate flushing velocity. However, this may not be the case in systems where scale and corrosion deposits (e.g., tuberculation on old cast iron mains) provide a restriction to obtaining adequate flushing velocity, or where chemical deposits or bacteriological slimes (biofilm) are present (on which the chemical contaminant may adhere).